Manual

LICAD 9

Edition September 2014/ V9.x **LISEGA SE**

Agreement concerning the use of the software

The Software and respective printed materials are copyrighted. The copyright notation contained within the Software may not be removed.
Without prior written consent from LISEGA, the licensee is not permitted to forward the Software or any respective printed materials to any third party, or to otherwise grant a third party access to the same. Upon purchasing the product, the licensee only receives ownership of the diskette containing the Software, and not ownership of the Software written upon it. Ownership of the rights to the actual Software is not included.
In particular, LISEGA reserves the rights to publication, duplication, processing, and utilization of the Software.

LISEGA reserves the right to update and modify the Software at the company's discretion. Any corresponding program revisions are to be carried out without prior notification.

The licensee is liable for all damages affecting LISEGA incurred by reason of breach of copyright, where the licensee has broken the terms of this agreement.

LISEGA accepts no liability regarding any flaws in the Software and the accompanying printed material. In particular, no guarantees are provided for the Software meeting the specific requirements and goals of the purchaser, or for it being compatible with other software-programs selected by him.

Table of Contents

1 Introduction 1

1.1 An introduction to LICAD 1
1.2 Software requirements 2
1.3 Installation 2
1.3.1 Procedure for getting LICAD to run on Windows Vista/7 is as follows: 2
1.4 Starting and registering LICAD 3
1.5 Deinstallation of LICAD 3
1.6 New installation 3
1.7 Resetting the LICAD drawing number 3

2 Program description, main menu 5

2.1 The main menu screen 5
2.2 Help menu 5
2.2.1 Help and Search via key word 6
2.2.2 Catalog 2010 6
2.2.3 LISEGA WEB- and Download-Site 6
2.2.4 Info-Screen and About LICAD 6
2.2.5 History 6
2.3 Language choice 6
2.4 Project data 8
2.5 Specification data 8
2.5.1 Permissible force difference between cold and warm position with variable spring hangers/variable supports 9
2.5.2 Maximum permissible range of movement for variable spring hangers 9
2.5.3 Load reserves for variable spring and constant hangers 10
2.5.4 Travel reserve for variable spring and constant hangers 10
2.5.5 The travel reserve for snubbers 10
2.5.6 The installation reserve for rigid supports 10
2.5.7 Load reserve for pipe-surrounding components 10
2.5.8 Preadjustments according to VGB, ASME and Reset 10
2.6 Adjustments 12
2.6.1 Warm/cold loads for variable spring hangers 12
2.6.2 Selection of the units 12
2.6.3 Selection of catalogs 12
2.6.4 Entering the load in kg or kN 12
2.6.5 Check hydro-load 13
2.6.6 Preset blocking position for constant hangers 13
2.6.7 Welds 13
2.6.8 The angulation for pipe supports 13
2.6.8.1 The appropriate critical angle for the presetting is to be entered here. 14
2.6.9 Designation of coordinate axes 14
2.6.10 Length of the threaded rods 14
2.6.11 Reduced temperature range for clamps 14
2.6.12 No consideration of low temperature clamp bases. 15
2.7 Configurations 15
2.7.1 Design without pipe-surrounding components 15
2.7.1 Determination of load group for static components 15
2.7.2 Determination of load group for rigid supports 15
2.7.3 Determination of load group for dynamic components 15
2.7.4 Building attachments 16
2.7.5 Special connection sizes 16
2.7.6 Selection of two-bolt clamps 16
2.7.7 Positioning of the pipe support in the operating position 16
2.7.8 Shockabsorber extensions 16
2.7.9 Long variable spring hangers 16
2.7.10 PTFE sliding plates for pipe supports 16
2.7.11 Seated constant and spring hangers incl. support or base plate 17
2.7.12 Weld-on clamp bases type 57 instead of clamp bases type 49 17

2.8 Additional Services ... 17
2.8.1 Pre-assembly ... 17
2.8.2 Presetting ... 17
2.8.3 Additional coating ... 17
2.8.4 Hot-dip galvanized design ... 18
2.8.5 Nuclear engineering design ... 18
2.8.6 Prices given ... 18
2.9 Printing ... 19
2.9.1 Printed picture options ... 19
2.9.2 Weight specifications in the parts list ... 20
2.9.3 Units in the letter head ... 20
2.9.4 Units of the dimensioning ... 20
2.9.5 Language for printing ... 20
2.9.6 Line widths in drawings and places after the comma ... 20
2.10 System settings ... 20
2.10.1 Font selection ... 21
2.10.2 Background colour ... 22
2.11 Export and import of option-settings ... 22
2.12 Securing settings with a password ... 22

3 Drawing up pipe supports 23

3.1 Entering data on pipe supports ... 23
3.1.1 For roller bearings and pipe saddles (Product Group 5) a further program point, ‘Cryogenics and bearings’, is available in the main menu.Static stress ... 23
Dynamic loads ... 25
3.1.2 Pipe saddles & clamp bases for cold block (cryogenic) systems ... 26
3.2 Selection of the configuration of supports ... 27
3.3 Entering elevation ... 28
3.4 Specification of the type of hanger ... 28
3.5 Alternative selection of clamp base ... 29
3.6 Selection of pipe supports ... 29
3.7 Graphic representation ... 29
3.8 Display of current hanger data ... 29
3.9 Alternative Figures ... 31
3.10 The location plan ... 31
3.11 North arrow ... 32
3.12 3D Reference Coordinates ... 32
3.13 Changing weld seam thickness ... 32
3.14 Saving and printing out a drawing ... 33
3.15 Generation of 3D transfer files ... 34

4 Additional programs 35

4.1 Supplementing a parts list ... 35
4.1.1 Completion of parts list during the drawing process ... 35
4.2 Revising drawings ... 35
4.3 Individual selection of hangers and pipe clamps/bearings ... 36
4.4 Project data administration ... 38
4.5 Search projects ... 39
4.6 Deleting drawings ... 39
4.7 Backup and copy drawings ... 40
4.8 Determining number of drawings ... 41
4.9 Reading in backuped drawings ... 41
4.10 Sending drawings by e-mail ... 42
4.11 Selection of drawings ... 43
4.12 Importing support system data ... 44
4.12.1 Five steps are required to import supports data ... 45
4.12.2 Storing and loading selection of column headings ... 46
4.12.3 Meaning of abbreviations for the column headings: ... 46
4.12.4 Import settings ... 47
4.12.5 Reading in UNC units ... 48

4.12.6 Import protocol of data 48
4.13 Entering input data on supports into a text or EXCEL file 49
4.14 Alteration of project data of existing drawings according to the stacking procedure 50
4.15 Deletion of supplementary services 50
4.16 Add additional feats 51
4.17 Cleaning up databases 51
4.18 View QReport documents 51

5 Directory and lists 53

5.1 Directory 53
5.2 Printing out drawings 54
5.3 Printing out individual parts lists 55
5.4 Printing out complete parts lists 55
5.4.1 Description of buttons 56
5.5 Printing out lists sorted according to hanger mark no. 56
5.6 Printing out adjustment lists 57

6 Additional sub-programs (interfaces) 59

6.1 ASCII-/DXF interfaces export 59
6.2 3D-representation of supports in MicroStation 61
6.2.1 Connection to Intergraph Design or Smart Plant Review 62
6.2.2 Placing a single component 63
6.2.3 Settings in the IL3 module 63
6.3 3D-representation of supports in PDMS 64
6.4 Interfaces to the SupportModeler™ (Pelican Forge) 65
6.4.1 Placing supports via the L3D interface into the SupportModeler. 65
6.4.2 Interface LICAD - SupportModeler (External Sizing Program) 65

7 Appendix 67

7.1 Insertion of one's own company emblem 67
7.2 The supports configurations (symbols) 68
7.2.1 Configurations in the static field 68
7.2.2 Configurations in the dynamic field 74
7.2.3 Configurations in pipe saddle and pipe bearing fields 75
7.3 LISEGA sectioning of load groups 77
7.4 Dynamic pipe clamps as hanger clamps 78
7.5 title block description of a LICAD drawing 79
7.6 Installation description of the LISEGA PDMS catalog (Version 2010) 79
7.6.1 Initial installation of the LISEGA catalog DB 79
7.6.2 Initial installation H&S Dictonary DB 80
7.6.3 Reading in a new catalog release (catalog upgrade) 80
7.6.4 Installation of the LISEGA menu in DESIGN 80
7.6.4.1 Creation of a user-defined PMLLIB path for DESIGN 80
7.6.4.2 Notification of the PMLLIB path in the 'evars.bat' file 81
7.6.4.3 Access PDMS, start MONITOR module and open Command Line 81
7.6.4.4 The actual accessing of the LISEGA menu 81
7.6.4.5 Menu items of the LISEGA menu in DESIGN 81
7.6.4.5.1 Start output File (LOF) 81
7.6.4.5.2 Create Input File (LIF) 82
7.6.4.5.3 Resetting rods and nuts 82
7.6.4.6 Important notes 82
7.7 Installation of the LISEGA catalog in MicroStation (Version 2010) 83
7.7.1 Installation and run application 83
7.8 Example of a LIF-file (LISEGA Input File) 84
7.9 Example of a LOF-file (LISEGA Output File) 85
7.10 Example of a L3D-file for PDS 87
7.11 Example of a ITM-file for SupportModeler 88
7.12 Network installation 89
7.12.1 Procedure on network installation 90
7.12.1.1 What to do if installation is made on a computer already installed with BDE 90

7.12.2 Settings in BDE 90
7.12.3 Integration of two BDE's 91
7.12.4 Installation of a client 91
7.12.5 Graphical representation of a network installation of LICAD 91
7.12.6 The 'BDENET.INI' file 92
7.12.7 Description of specially important BDE entries 93
7.12.8 Manual BDE configuration 94
7.13 What to do if 95
7.14 Listing LISEGA.INI 96

8 Index **97**

1 Introduction

1.1 An introduction to LICAD

By using the free of cost LICAD program you can considerably reduce project planning expenses and thereby cutback costs for the planning of supports for piping systems. With LICAD more than 90% of the normal support positions can be covered as standard cases.

The time-consuming and thereby cost-intensive work that used to come up in the form of preparing sketches, installation drawings and ‘combing through’ catalogues, can be considerably optimized by using LICAD.

The specific data of the support points (force, pipe diameter, travel, etc.) is entered with menu-controlled program guidance. A support configuration appropriate to local circumstances is selected by dialogue and by a symbolic representation of standard supports. Automatically LICAD carries out the selection and determination of components which are suitable for a given load in a support configuration. Further Intervention on the part of the operator is no longer required. The result is presented on the screen to the user in a scaled graphic form including a parts list indicating weights and materials and can be changed as required. Also a site plan can be filled if desired.

With the selection of variable spring and constant hangers, general guidelines for the selection of pipe supports (ASME, VGB, etc.) are automatically allowed for with the appropriate specifications of basic data.

All support positions dealt with are automatically saved by the program and can be called up and, if required, altered at any time. In addition to printing out drawings LICAD also supplies detailed as well as compiled materials lists. For later processing of the supports as a 3D graphics in CAD programs export functions can be used. Furthermore, various interfaces to major software vendors are available.

The basis of the program, a completely new development by LISEGA, forms a comprehensive data bank system of the LISEGA standard components catalogues The program can be operated as desired in eleven languages: Chinese, English, French, German, Hungarian, Italian, Japanese, Polish, Portuguese, Russian or Spanish.

By constant further development of the program, in particular by taking customer requests into account, LISEGA is setting a standard for the future in the field of pipe support construction with the LICAD program.

Frank Sarnoch
Zeven, February 2013

1.2 Software requirements

Microsoft Windows 2000, Windows XP, Windows Vista or Windows 7

1.3 Installation

Place the installation CD in the CD drive. The installation program normally starts automatically. If not, start the 'setup.exe' program on this CD.

If you have downloaded LICAD from the Internet, simply start up the downloaded program (LICAD_Vxxx_setup.exe).

Important: For installation it is essential that you have administrator rights on your computer.

For a network installation, please do not fail to read section 7.12 'Network installation'. For a single position or local installation no further information is required.

1.3.1 Procedure for getting LICAD to run on Windows Vista/7 is as follows:

1. LICAD must be installed as an administrator
2. Right-click on the LICAD shortcut
3. Select the "compatibility" tab.
4. Check the box that says, "run program in compatibility mode"
5. Select "Windows XP, SP2" as the operating system type
6. Check the box that says, "run this program as administrator"

Once these steps are complete, LICAD should work, though you will receive an annoying message asking "are you sure you want to run this program?" every time you try to open it. This can be worked around (see Microsoft's UAC documentation) but instructions for doing so are beyond the scope of this message.

Please allocate every workplace its own serial number, as the drawing number is derived from this. If you install LICAD on a number of computers with the same serial number, you receive the same drawing number with different drawings a number of times.

You can receive additional serial numbers from LISEGA free of cost.

Please follow the instructions on the screen to install the program.
If you have not yet installed LICAD for Windows, the installation program will request user information and a serial number. Attention need not be paid to capitals or small letters when entering the serial number.

If LICAD is installed on a network client (see section 7.12 'Network installation') registration is required for this workplace.

In this case the program asks for details of the company and the serial number when first starting (see Figure 1). After successful entry the program number appears in the status bar. This procedure is not required on a renewed start.

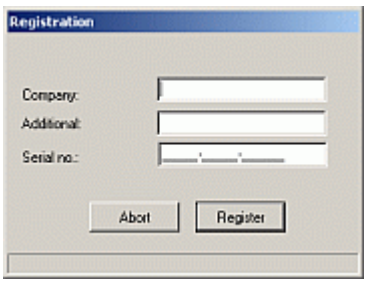

Screen for program registration

1.4 Starting and registering LICAD

Open the menu ‘Start – Programs – LISEGA - LICAD’ from the status bar.

When the program is first started the following message appears :

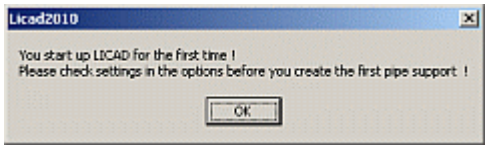

Remark for the options

Note : If the program is not used for some time a corresponding message will be displayed (as shown above). The settings are not lost as a result, the user is simply advised to check the project data.

Before you now begin laying out pipe supports you should familiarize yourself with the program item *Project data* (refer to 4.4) and Project data administration (2.4ff).

All data, insofar as they are not otherwise stored, are saved in the LICAD installation catalog/DB.

1.5 Deinstallation of LICAD

Open the menu ‘Start – Settings – System guidance - Software’ from the task list. Select ‘LICAD Uninstall’ from the window and click onto ‘Remove’.

Before deinstalling the program, you should secure the following files in the directories <LICAD installation catalog>/Projects:

KONSTR8.DB, KONSTR8.PX, KONBTL8.DB, KONETZ8.DB, KONSTR8.DB, KONSTZ8.PX, PRJINF8.DB and from the <LICAD installation catalog>/DB or /SystemDB the file FIRDAT.DB

In the case of renewed installation, the drawings are again at your disposal and you can set up again on the old position of drawing numbers.

Any project paths which may have been laid are not deleted.

1.6 New installation

Proceed at first as under point 1.3 and 1.5 described. After installation, copy the files

KONSTR8.DB, KONSTR8.PX, KONBTL8.DB, KONBTL8.PX, KONETR8.DB, KONETZ8.DB, KONSTR8.DB, KONSTZ8.PX, PRJINF8.DB and FIRDAT.DB

back into the directories <LICAD-Installation catalog >/DB and <LICAD installation catalog>/Projects. This is however only necessary if the old data inventory is to be established again.

1.7 Resetting the LICAD drawing number

It is necessary to reset the counter number of the LICAD drawing number if
- the program was reinstalled and existing drawings have to be considered
- the serial number was wrongly set through a system error

The first step is to determine the last drawing number assigned. Access the program point 'Contents' in Licad and note the drawing with the highest number (e.g. 321-3-57500). Now switch in LICAD to the options 'System Settings'and overwrite the value in the Ser. No. field with, e.g., 322 (=321+1).

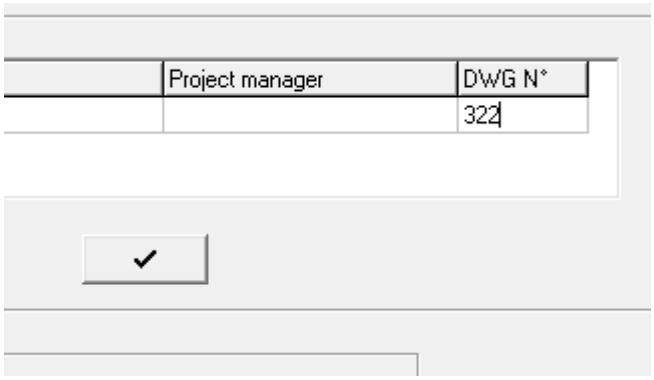

Click on the button below it to save it. The next new drawing would then be assigned, for example, the number 322-3-57500.

2 Program description, main menu

2.1 The main menu screen

Figure 3 shows the LICAD main menu screen.
Working from this menu the individual programs can be called up by entering a letter.

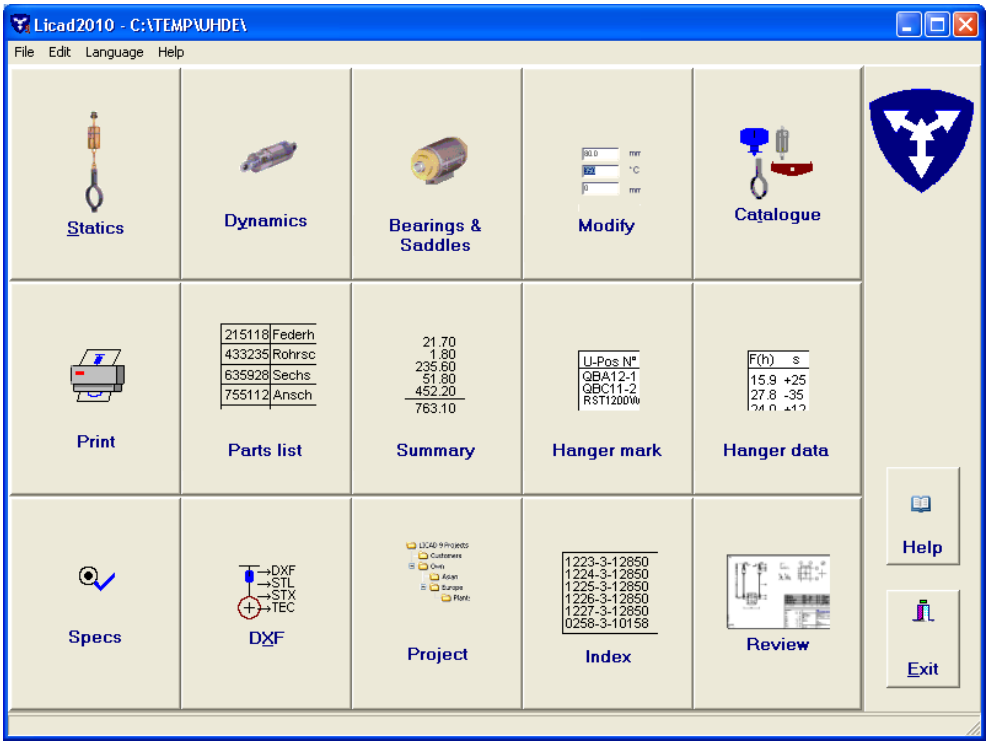

Figure 3: LICAD main menu

Before the first drawing is prepared the specifications and other parameters (refer to 2.4 ff) first have to be set in the program. For this, click on the 'Options' button in the main menu. On the screen that follows, using the cursor keys you can choose between the items Project Data, Specifications, Service, Settings, Configurations, Additional Services, Printing and System Settings.

2.2 Help menu

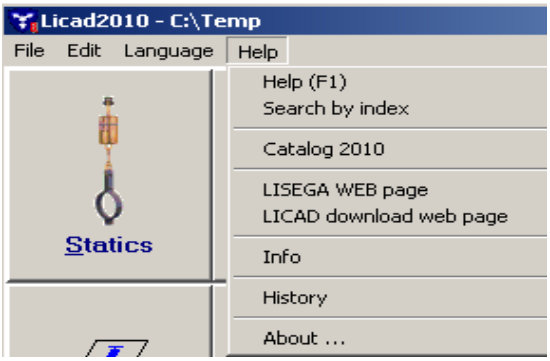

Figure 4: Help menu within main window

The Help menu (Figure 4) can be accessed from LICAD main window. Various information on software, the PDF catalog or the LISEGA website can be accessed here.

2.2.1 Help and Search via key word

By way of the menu point Help the table of contents of online help is accessed. Click on the desired heading to obtain further information.

Note: At every point in the program you can click on F1 to obtain context-related help

2.2.2 Catalog 2010

Insofar as the option to copy the LISEGA catalog on to the computer was selected on installation, the catalog can be opened by clicking on this menu point. The catalog is available as a PDF file and AcrobatReader is required to start it. AcrobatReader is Shareware and is on the CD or can be downloaded from the Internet under www.adobe.com

On later installation, the path for the LICAD PDF files should be made known. This is done via the LISEGA.INI file (7.14) in the <LICAD installation directory>. The path must be entered there under the heading CATALOG for the corresponding language (7.14).

2.2.3 LISEGA WEB- and Download-Site

Under this heading we heartily invite you to a trip through our world of pipe supports.

With a click on the LICAD Download Site you can get information on the latest downloads

2.2.4 Info-Screen and About LICAD

If you need further information and would like to get in touch with LISEGA, you will find telephone numbers and addresses of the various company locations under ‘Help - Info’.

Note: You can click on the LISEGA symbol in the main menu to open the same window.

Exact details of the LICAD version can be found under ‘Help - via’. In the lower right-hand corner the revision number and date are displayed. This information is important for queries.

2.2.5 History

Since the publication of Version 8.0.0, all alterations to LICAD have been recorded in the HISTORY.HTML file. This file can be opened by way of the Internet browser.

2.3 Language choice

Setting of the menu language and the printer language is made working from the main menu. For this, select the menu point ‘Language’ in the menu line.

Figure 5: Auxiliary window for choosing the program language

The menu guidance can be done in eleven languages:

Chinese, English, French, German, Hungarian, Italian, Japanese, Polish, Portuguese, Russian or Spanish

The printing language can be selected under the options Print - Language.

Note: Drawings and materials lists are always given out in the language set at the time. Drawings which have been saved can be printed out in any of the languages named above. Just make the appropriate setting before printing.

The menu languages are independent of the Windows system setting. The settings relating to countries are therefore to be modified under NT 4.0 if, for example, the menu is to appear in Polish but the country-related setting stands at Germany. This is not possible with Windows 95. The languages not supported by Windows are not listed in the selection. With Windows 7 although all languages are displayed but the corresponding languages have to be reloaded with Windows.

2.4 Project data

In addition to the drawing number, the specific project data should be entered for the administration of drawings and for the documentation.

The program adds the data entered in this mask to each additional drawing prepared and saves it.

The following data can be entered individually:

1. Name of ordering party
2. Designation of the facility
3. Designation of the system
4. Name of the person in charge of the project
5. Commission number of the ordering party
6. Customer's order number
7. A so-called heading space or free space. (This space can be freely defined and the appropriate entry can later be used as search criterion.)
8. Comments can be entered here together with space 10.
9. LISEGA order number

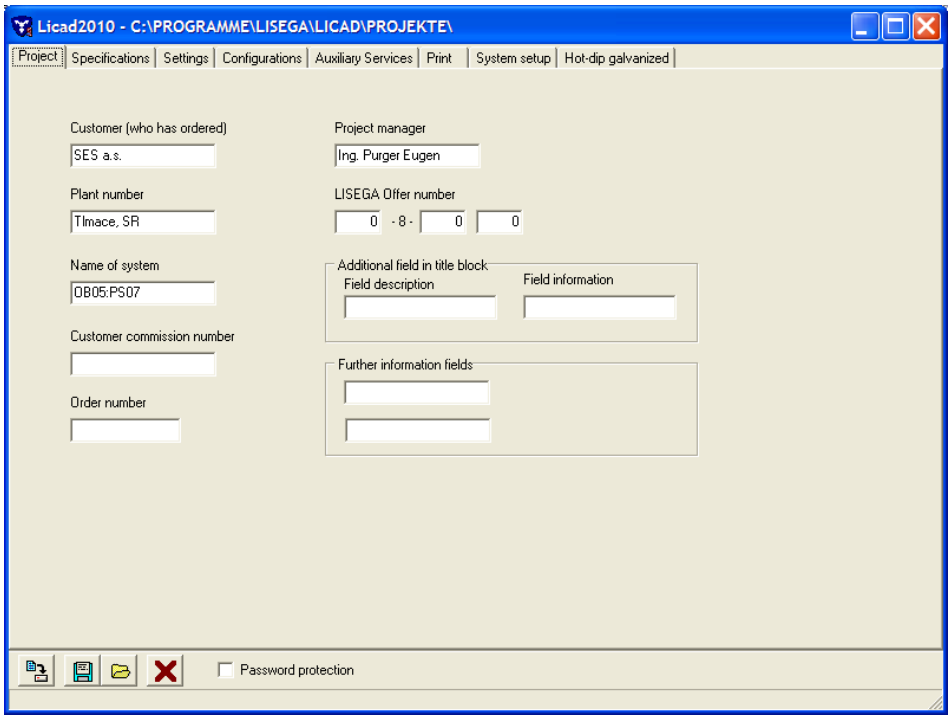

Figure 6: Input mask for project data

Tip: In the entry mode you can jump back to the OK space at any time with the Escape key or the Pos1 key.

2.5 Specification data

On the screen shown below (Figure 7) you specify the criteria according to which the functional components such as variable spring/constant hangers or snubbers are to be selected by the program. In addition, general basic conditions for the program are stipulated here.

The following specifications should be checked:

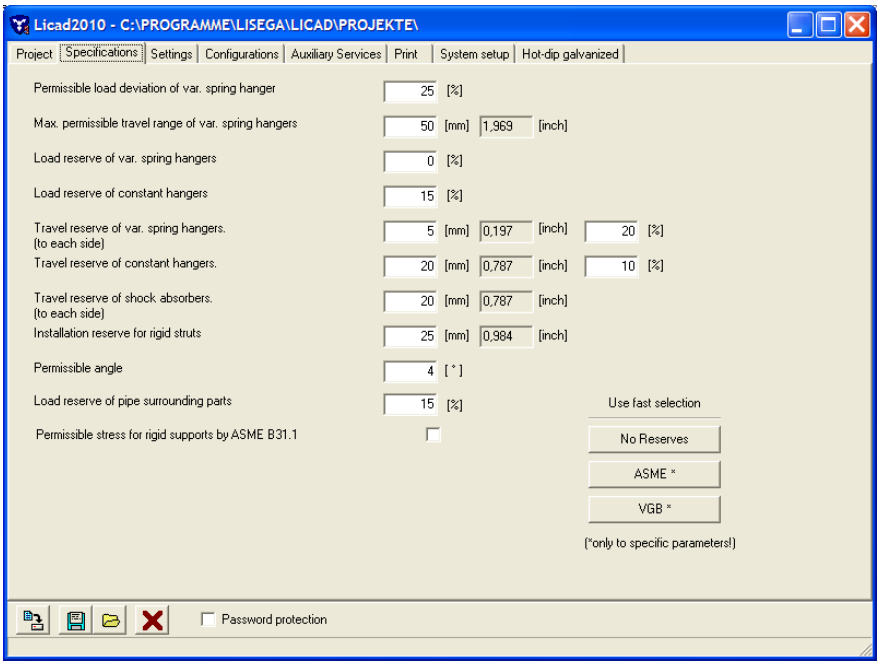

Figure 7: Screen for specification data

The specific VGB guidelines can be set with the VGB button.

For rigid supports, the selection of the support chain can be made additionally according to the ASME B31.1 guideline. If the option is set, the design is arranged according to the load grouping ‘H/Normal’ (see Appendix 7.3).

2.5.1 Permissible force difference between cold and warm position with variable spring hangers/variable supports

Variable spring hangers or variable supports are to be used when minor shifts of piping resulting from heat expansion are to be spanned and the additional reaction forces that thereby arise, caused by the spring travel, are structurally justifiable for the strength of the piping.

The difference between the cold and warm positions acts in the piping system as an additional reaction power on the point of attachment. This additional reaction power is limited in its size by the respective design regulations which apply. According to general guidelines the permissible deviation of force should not exceed 25%.

$$\Delta F = \frac{F_{hot} - F_{cold}}{F_{hot}} * 100\%$$

The difference in force is defined in the LICAD program as follows:

Should it not be possible to find a standard variable spring hanger due to the spring rates, then constant hangers are automatically selected by the program.

2.5.2 Maximum permissible range of movement for variable spring hangers

As already mentioned above, variable spring hangers are only used in piping construction within a certain working range. In addition to the difference in force a general travel limit can also be given for the use of

variable spring hangers. If the total travel exceeds this limit then the program automatically selects a constant hanger.

(If the permissible range of movement is set at zero then only constant hangers are selected by the program.)

2.5.3 Load reserves for variable spring and constant hangers

The selection of constant hangers is made within the range of capacity. The operating load is within a range of between 40% and 100% of the respective rated load of the constant hanger. You can find additional information in the LISEGA catalogue.

For variable spring hangers, the given travel reserve always refers to a particular direction; for constant hangers the given travel reserve has absolute consideration.

When a load reserve is entered, the program checks whether a corresponding load variance can be taken on by the hanger selected and in the case of a change that the working space available is sufficient. If necessary the program automatically selects another hanger.

2.5.4 Travel reserve for variable spring and constant hangers

The program also checks, according to the load reserve, whether a larger working range of the piping might be acceptable for the type of hanger selected. In doing so LICAD checks whether in the case of an enlargement of the working range the permissible difference in force is not exceeded or whether a new hanger has to be selected due to the enlarged working space.

If, for example, with a travel of 30 mm a travel reserve of 10% is specified then the program checks whether the hanger can also be used with 33 mm.

For spring hangers the travel reserve entered corresponds in each case to a direction, for constant hangers the travel reserve is considered absolutely.

Always be sure that by entering a travel or load reserve simultaneously the possible selection of a hanger is narrowed down more and more and a correspondingly heavy hanger is selected.

There is an AND/OR link between the two selection criteria above (2.5.3 + 2.5.4) in case of constants. For spring hangers the relation is OR only.

2.5.5 The travel reserve for snubbers

Recommended travel reserve for snubbers : The travel reserve for snubbers is understood to be the position of the piston rod in relation to the end position. A safety clearance of 10 mm for the piston end position is recommended for the proper use of snubbers.

2.5.6 The installation reserve for rigid supports

Tolerances for the assembly dimension are allowed for in the selection of rigid supports by the size of the installation reserve.

2.5.7 Load reserve for pipe-surrounding components

Although not expressly required by the VGB guidelines, a load reserve when selecting is also taken into account for pipe clamps and clamp bases analogously to the spring and constant supports. There is not much sense in the rest of a support chain distributing a higher load if the pipe-surrounding component has already reached its limits.

2.5.8 Preadjustments according to VGB, EN13480, ASME and Reset

To design the supports according to VGB, EN13480-3 or ASME guidelines, the VGB or ASME buttons on the page for options/specifications can be selected. The corresponding values are then set. In addition, it must be taken into account that the selection of clamps is limited in temperature in accordance with the

requirements of the material. Moreover, the cold load is taken for the load input, and that the pipe surrounding components have to bear an additional load reserve. Both can be set on the options/ settings page.

When selecting the reset button, all reserves are reset to zero. No further changes are made.

2.6 Adjustments

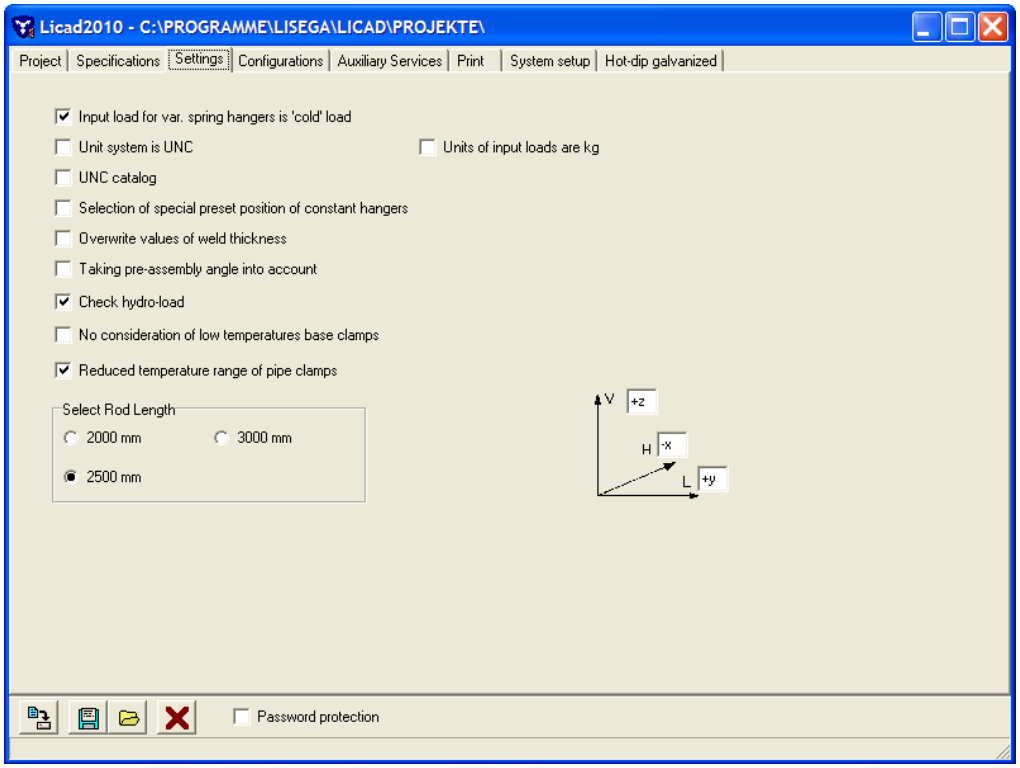

Figure 8: Entry mask for settings

2.6.1 Warm/cold loads for variable spring hangers

Whether the operating load or the cold load is entered is of special importance for the selection of variable spring hangers. LICAD calculates each opposite load case and puts these out in the drawing. Furthermore, the preset load of the hanger is put out. The preset load consists of the cold load and the additional load of the component which encloses the pipe.

The preset load is made up of the cold and the additional loads. The additional load is calculated from the load chain parts situated below the hanger (incl. the pipe-surrounding components).

2.6.2 Selection of the units

LICAD distinguishes between two systems of units. One is the SI unit system, the other being the American system (**Imperial System**), which is based on inches and pounds. Deviating to the SI system, the temperatures are indicated in Celsius [°C]. With ID entries the American LISEGA catalog are selected by the program as a basis.

2.6.3 Selection of catalogs

LICAD can calculate the load chains from LISEGA's metric and American (UNC) catalog independently of the units selected for input.

2.6.4 Entering the load in kg or kN

If desired the loads can also be entered in kilograms. Input values in (kg) are internally recalculated by a factor of 9.81 m/s^2 in (Newton). For technical reasons specific to the program the input space is defined as deca-kg.

2.6.5 Check hydro-load

With a *static stress* of supports, in addition to the operating load the *so-called hydro-load* can also be checked. In doing so the program checks whether the support selected will carry the specified water load with *preset* hangers.

2.6.6 Preset blocking position for constant hangers

The preset position with constant hangers and constant supports can be specified by the user.
The travel stop position can only be selected within the prescribed limits. The optimized travel stop position is indicated to the user.

This option is only available if the constant hanger type is selected beforehand by the user.

2.6.7 Welds

For the building attachment parts (product group 7), the weld thickness required for assembly are given by the program. This 'minimum weld thickness' is designed such that the permissible tensions are only exploited to 50% in favor of high safety. A force applied at 6° in the weld was taken as a basis for the design. The weld thicknesses can be changed later if you enter N.

2.6.8 The angulation for pipe supports

1. Taking the pre-assembly angle into account

LICAD offers the possibility of having the angulation, which results from the movement between the cold position and the warm position of the pipe support (in relation to the point of attachment of the pipe support on the beam), checked for size. Figure 9 shows a diagrammatic example of the pre-assembly angle.

The program is based on the assumption that where a specified angle is exceeded (refer to Figure 9) as the result of excursion in the plane, the pipe support must be pre-fitted by half of the working range (in the horizontal or lateral direction). The angle is virtually reduced to one half by halving the range. If the angle is still too large in spite of the halving, the program stops with an appropriate message on the angle calculated and allows the user either to continue or to redesign the support.

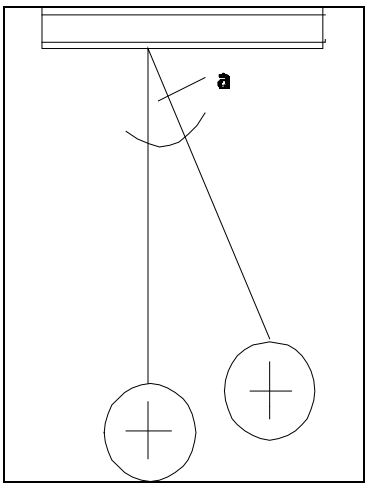

a := pre-fitted angle or angulation

Figure 9: Pre-fitted angle for pipe supports

Note: The length for the calculation of the angle is determined from the distance between the points of the axis of rotation of the structural connection and the pin axis for the pipe clamp connection.

In the drawing the result is shown using so-called pre-fitted triangles. From these the total pipe movement is apparent on the one hand and on the other the direction in which and how much the pipe support has to be pre-fitted is given.

2. The permissible angulation

2.6.8.1 The appropriate critical angle for the presetting is to be entered here.

Permissible angulation and loads for weld-on brackets Type 35
Care must be taken that lateral deflection to the angle of displacement of the weld-on brackets is limited to 6°. The installation position must therefore be checked for the possibility of free movement on thermal expansion.

When the angle of displacement increases to 90°, the permissible loads are reduced by approx. 15% at constant welding-scam thickness.

2.6.9 Designation of coordinate axes

When LICAD was introduced LISEGA intentionally broke away from the conventional designation of the coordinate axes. As misunderstandings in the transfer of data arose in some countries as a result of varying axes designations, a way was sought to do justice to all users by a neutral designation of the axes.

The vertical axis is defined as positive upwards. The horizontal axis points into the screen (generally in

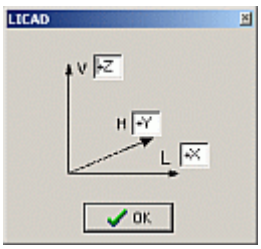

Figure 10: Input window for defining coordinate axes

the piping axis). The lateral axis is perpendicular to the other two axes and is positive towards the right.

But LICAD also offers the user the possibility of using his or her own designations for the coordinate axes. On the following screen each of the individual axes can be assigned two characters.

2.6.10 Length of the threaded rods

It has proved expedient to limit the length of threaded rods for the transport of supports to sites. For design purposes the maximum length of threaded rods can therefore be limited to 2000 mm. 3000 mm is chosen as standard, 12 feet in UNC.

2.6.11 Reduced temperature range for clamps

In accordance with the VGB guidelines the permissible application ranges with regard to temperature must be limited in LICAD. The following values are thereby considered:

Temperatures	Material
up to 350°C/660°F	S235, S355
up to 500°C/930°F	16Mo3
up to 530°C/985°F	13CrMo 4 – 5
up to 580°C/1075°F	10CrMo 9 10
up to 650°C/1200°F	P91

2.6.12 No consideration of low temperature clamp bases.

This option prevents selection of clamp bases designed for the temperature range up to 350°C/660°F (Material S235, S355). The idea behind this is that even at lower temperatures and comparatively smaller insulation thickness, clamp bases with higher installation dimensions can be selected.

2.7 Configurations

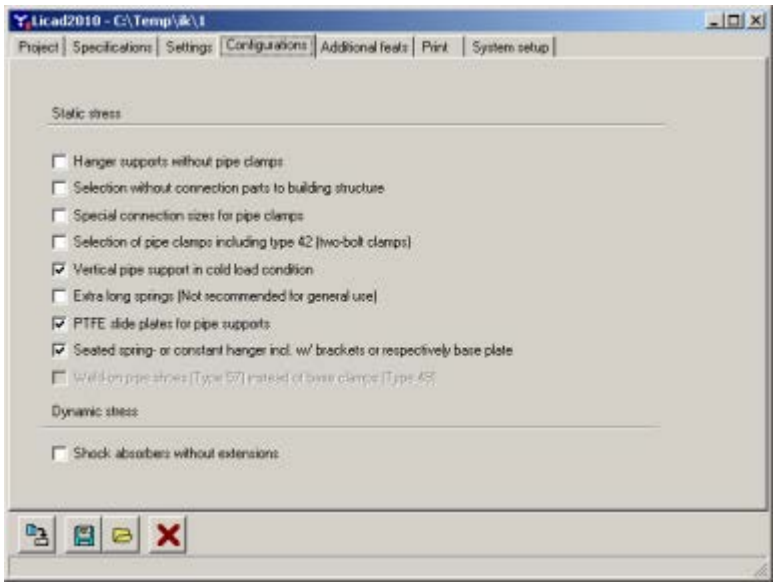

Figure 11: Entry mask for configurations

2.7.1 Design without pipe-surrounding components

All support configurations can also be selected without components enclosing them. In replacement the program provides the user with a selection of various connecting components.

2.7.1 Determination of load group for static components

The nominal load is used to determine the load group. For statically determined components in the product groups 1, 2, 4, 6 and 7, the nominal load corresponds to the max. adjustment load of the spring components such as spring and constant hangers. Selection is made according to the table for statically determined components, Catalog Page 0.5 or Appendix, Section 7.3.

2.7.2 Determination of load group for rigid supports

Determination of the load group for rigid supports is made according to the table for statically determined components, Catalog Page 0.5 or Appendix, Section 7.3, load case H 80°C. If B31.1 was selected, the design is made according to load case H. The max. permissible operating load (load case H) lies, when implemented as a rigid support, considerably higher than the nominal load and is adjusted to the load capacity of the connection thread.

Note: Should the smallest possible connection of a clamp be higher than the load group for the rods, the program will automatically increase the load group for the rods till the threaded connection fits the clamp.

2.7.3 Determination of load group for dynamic components

For dynamically determined components the specification of the nominal loads follows from the meaningful classification of the standardizable load spectrum. At the same time the nominal load

corresponds here to the operating load for load case H (or level A/B in ASME). Selection is made according to the table for dynamically determined components, Catalog Page 0.5 or Appendix, Section 7.3.

Note: It should be noted that for extensions the permissible loads are reduced. The program automatically increases the load group if the permissible load is exceeded due to the extra length.

2.7.4 Building attachments

Similar to item 2.7.1, supports can also be designed without building attachments such as weld-on eye plates and clevises.

2.7.5 Special connection sizes

Pipe clamps and bearings are based on the LISEGA 2010 catalog (product group 4). This guarantees compatibility with the LISEGA construction kit system in relation to load groups and connection geometry. As in some cases with fume pipes, clamps with large pipe diameters cannot always be attached to hangers of a relatively small load group, it is still possible for the program to select appropriate clamps. These clamps are identified in the materials list as special components, since the connection geometry does not correspond to the standard.

2.7.6 Selection of two-bolt clamps

The option of two-bolt or three-bolt clamps is available to the user for the selection of supports. Supports are standardly designed with three-hole clamps (type 43). Type 42 clamps are then available when the support is to be designed without insulation.

2.7.7 Positioning of the pipe support in the operating position

The positioning of the pipe support in the operating and assembly position: depending on the design guidelines, the program should be informed as to whether the pipe support is to be vertically installed in the assembly or operating state. The pipe movements should be entered in such a way that the sense of direction from the assembly position refers to the operating position. The support length entered always refers to the vertical state.

2.7.8 Shockabsorber extensions

As an option, dashpots can be designed with or without extensions. (Important: in a design without extension the range of the required installation dimension is quite limited.)

2.7.9 Long variable spring hangers

In general, only variable hangers with spring travel up to 200 mm are considered by the program. This corresponds to the travel ranges 1, 2 and 3. If required, spring hangers with extra-long spring travel of 300 and 400 mm can be used. On installing this hanger one must however consider that the actual load deviation caused by additional friction in the hanger increases. It is therefore recommended that constant hangers be used for longer travel.

2.7.10 PTFE sliding plates for pipe supports

PTFE (Teflon) sliding plates are recommended to allow the smallest possible horizontal load displacement. In addition, by the use of sliding plates the load limit of heat resistant clamp bases (none ‘ST-Material’) is increased by 40 % over the catalog values. This also applies to clamp bases seated on trapezes.

2.7.11 Seated constant and spring hangers incl. support or base plate

Seated constant or spring hangers are supplied with supports or base plates as standard. If so desired, these seated hangers can also be supplied without these components, whereby constant and spring hangers are seated directly on the housing.

Note: The independent support configurations for directly placed constant hangers in earlier LICAD versions have been withdrawn.

2.7.12 Weld-on clamp bases type 57 instead of clamp bases type 49

Clamp bases type 49 are used as standard in configurations. For low temperatures, simple weld-on clamp bases can be used if desired.

2.8 Additional Services

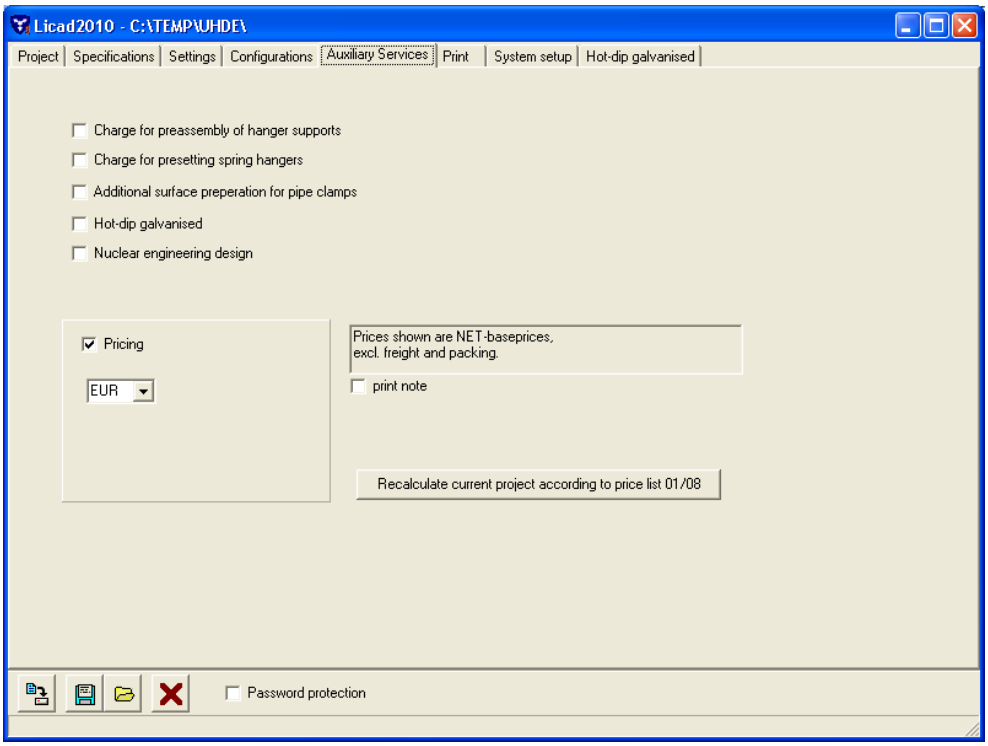

Figure 12: Entry mask for extra services

2.8.1 Pre-assembly

Pre-assembly: On request the pipe supports can be pre-assembled by the manufacturer. This item is accordingly added to the materials list.

2.8.2 Presetting

Presetting: Variable spring hangers and variable supports can be prestressed and preset by the manufacturer on request. The corresponding information is added to the materials list.

2.8.3 Additional coating

Additional outer paint coat for clamps is based on LISEGA standard steel blasted and additional zinc dust primer.

2.8.4 Hot-dip galvanized design

For extra surface protection a large part of the product groups 1, 2, 4 and 6 can also be hot-dip galvanized. If this option does not exist for a component within a load chain, this component will then be supplied as standard.
Over and above this, the user can select individual product groups to be hot-dip galvanized. (See following illustration)

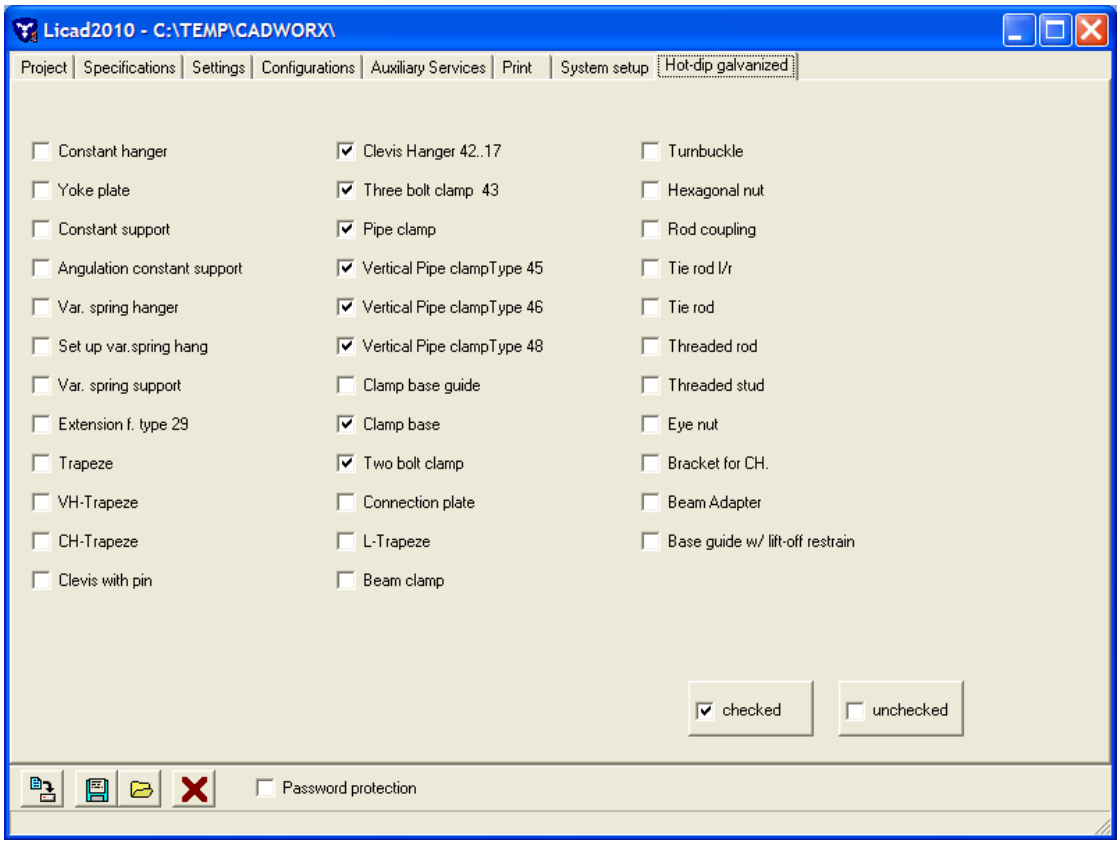

Figure 13: Selection of hot-dip galvanized components

2.8.5 Nuclear engineering design

Pipe supports can optionally be prepared in standard design or nuclear engineering design. This is identified in the materials list by a different article number.

2.8.6 Prices given

On request LICAD calculates the prices of the supports. The prices quoted refer to the LISEGA price list 01/08.

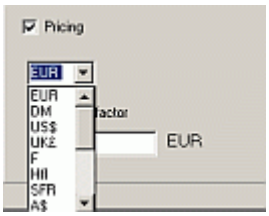

Figure 14: Input window for prices

You can choose between various currencies by opening the Pulldown window. Select the corresponding currency and then enter the exchange rate of this currency.

For example: should the prices be calculated in Japanese Yen, select JPY in the pulldown window and enter the value for the exchange rate to the currency of the price list in the field ‘Conversion factor’.

If the desired currency is not available in the Pulldown menu, a further currency can be entered by rewriting the currency field.

2.9 Printing

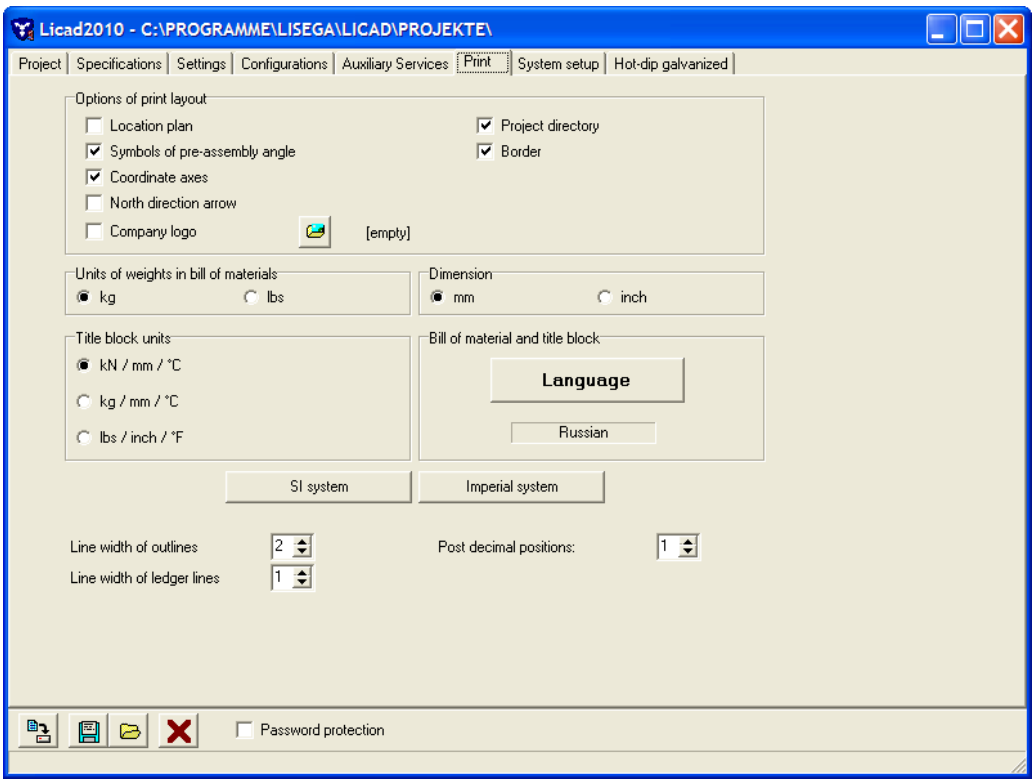

Figure 15: Eingabemaske für die Druckeinstellungen

2.9.1 Printed picture options

Location plan :
If required the position of the pipe support can be identified in a building layout. The basic structure of the location plan corresponds to that of a conventional building.

In addition to identification of the building axes, the layout of the piping can also be given.

Marking the option only means that default-wise the plan is printed out. The entry can always be made as a matter of course. This option can also be changed afterwards.

Pre-setting symbols, coordinate cross and north point:
If so desired, the pictograms can be printed out default-wise according to the location plan.

If a **company logo** is to be included in the print out, the corresponding option should be set. The desired graphic can be selected via the ‘Open Picture Dialog’ button . (Opening a Bitmap file, see 7.1)

2.9.2 Weight specifications in the parts list

The weights specified in the parts list can be given in kg or ibs as required, independently of the entries.

2.9.3 Units in the letter head

The specifications in the letter head can be given in various unit systems as required, independently of the entries.

2.9.4 Units of the dimensioning

The dimensioning of the drawing can be made in mm or inch independently of the units set for input.

2.9.5 Language for printing

Print-outs can be made in various languages independently of the menu language selected. The choice of languages depends not on the operation system but on the printer.

2.9.6 Line widths in drawings and places after the comma

The widths for the layout and auxiliary lines can be freely selected. A suitable value for the base line would be 2 or 3. The auxiliary lines should always be finer.
The places after the comma of the values for the pipe displacements can be adjusted to suit. For this, the values 0 (without following comma), 1 and 2 places after the comma are available.

2.10 System settings

The following program parameters can be set in the system settings field.

Font : For most program masks, individual fonts can be set.

Background color : For graphic representation of supports the background color can be changed. ‘Current color of buttons’ of the Windows settings is entered there as standard (mostly light grey). To copy the support as a graphic into another document the color of the background, e.g. on white, can be altered.

Languages selection : As described in ‘Language control’, only the languages supported by the relevant operation system are shown in LICAD. If all the available languages are to be shown, the switch for language selection must set on ‘Show all available’ and stored. The text display can however be incorrect in this case!

Language : The language for the program can be set here.

Ser. No. : This abbreviation stands for Serial LICAD drawing number.
This number can be amended by the user. Attention however; if the number is set back : if a corresponding number is already present in the current project path, then a serious error can occur. The drawing number is then to be set on the next free number.

‘Project manager’, ‘addition’ and ‘registered for...’ These entries can also be changed. Amend the entries; then store them with the ‘Update entries’ switch (Store with a tick below the window).

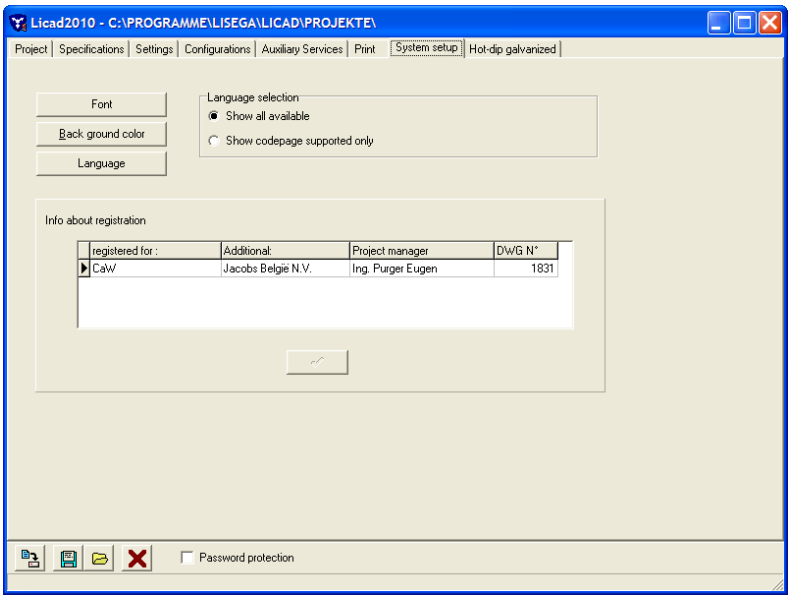

Figure 16: Entry mask for the system settings

2.10.1 Font selection

The type of lettering for the input fields in LICAD can be freely selected under ‘Options - System settings’ (Figure 15).
Note that not all fields are displayed if too large lettering is chosen.

2.10.2 Background colour

Under ‘Options - System settings ‘ (Figure 15) the colour for the background to the graphics can be set. This is especially useful when supports graphics are to be copied into other programs with the aid of the clipboard.

2.11 Export and import of option-settings

Most settings in the options can be saved in a text file and also accessed again. For this, use the buttons ‘File - save’ and ‘File - open’.

Note: Under certain circumstances it is a good idea for questions about a LICAD problem to include a corresponding file with the current settings.

2.12 Securing settings with a password

The values set in options can be secured using a password. For this, click on the button “Password security” (Bild 17). Following this you are asked to enter a password not exceeding 10 characters. This must be repeated to confirm.

Note: Password security is optional and need not be activated!

After the button has been activated, changes can only be made by entering the correct password. The changes are rejected if a false entry is made. This applies both to new drawings and also to changes in drawings.

Background: It is quite normal for companies to lay down standards regarding the design of pipe supports. This applies especially to reserves, permissible load deviations etc. These values should not be altered by the user and may only be modified in exceptional cases in consultation with a supervisor.

Repeated clicking on the password button deactivates the protection.

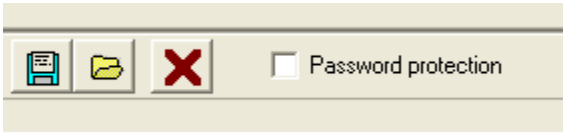

Figure 17: Password protection Switch

Passwords forgotten: The password itself is stored in the computer registry. Should the password be lost it is sufficient to delete the input (key) there.

OPWD

HKEY_CURRENT_USER

\SOFTWARE\LISEGA\LICAD_9_0

Attention: Only for experienced users

3 Drawing up pipe supports

3.1 Entering data on pipe supports

In general, the **permissible loads for statically** determined parts and **permissible loads from dynamic** sources are differentiated for operational reasons. Dashpots and jointed supports as well as all parts in product group 3 in the LISEGA catalogue are designed for dynamic loads.

3.1.1 For roller bearings and pipe saddles (Product Group 5) a further program point, 'Cryogenics and bearings', is available in the main menu.Static stress

Figure 16 shows the appropriate input screen for the SI unit system and for static stress.

The internal *LICAD Drawing No.* is displayed in the uppermost space. The first two numbers in this space are issued by the program and cannot be altered. The third part of the number is provided for a project or system number. The issuance of these numbers makes it possible to search faster within a project for drawings of a certain system. Following this the *Customer Drawing Number*, the *Hanger Mark Number* and the *Calculation Point Number* can be entered.

The letter following the space labeled *Load* refers to the specified load: hot or operating load >>hot<< or cold load >>cold<<. The setting is carried under 'Specifications' or can be altered via double click on the field in this screen or by clicking on buttons <->.

The program processes loads from 0.04 kN to 400 kN for static stresses with spring elements and to as much as 545 kN with rigid supports.

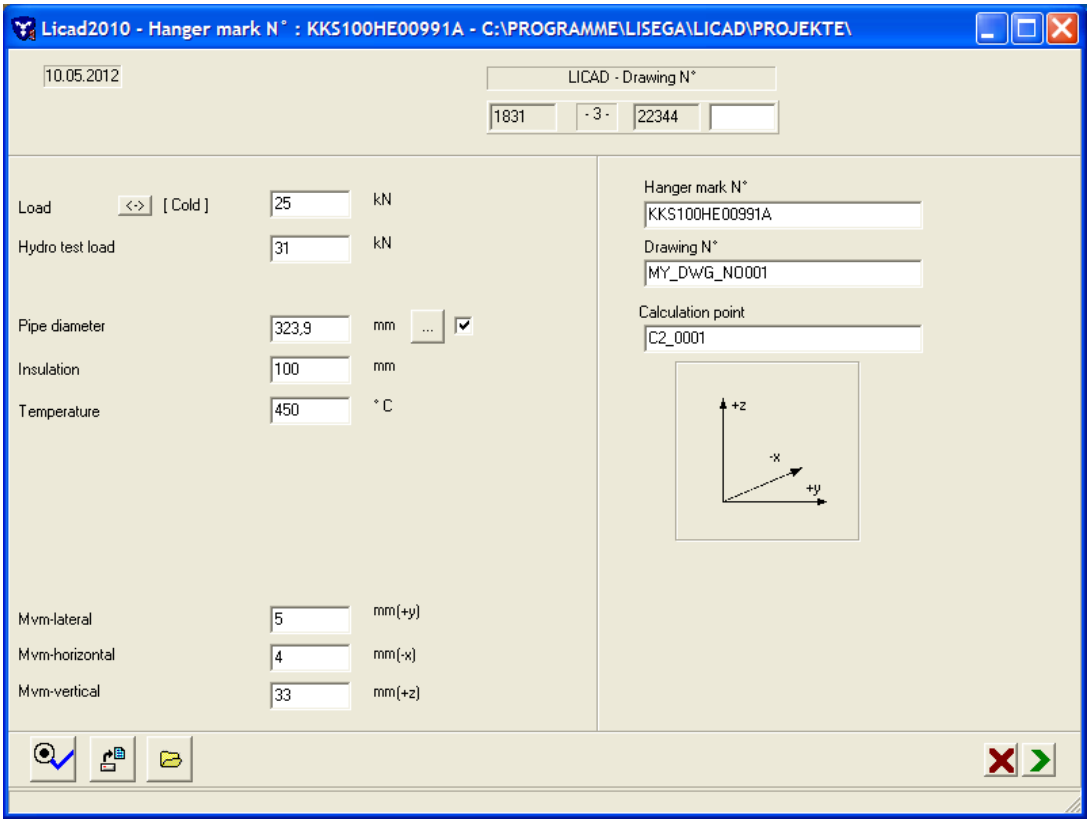

Figure 18: Mask for the input of pipe support data

The value for the *Pipe diameter* refers to the outer diameter of the pipe. Via a double click in this field or clicking on the button ... a help screen with standard pipe diameters can be called up.

Observe the following:

1. If the value entered is within the tolerance range indicated then LICAD assigns this value to the corresponding standard pipe diameter.
2. If the value is outside of the tolerance range then it is a special diameter. The consequence is that a clamp with the next higher rated diameter is selected. The clamp is labeled as a special article. The holding values of the special clamp correspond to the next higher catalog clamp. Analogously, this also goes for the weight and list price.

For trapeze supports with piping laid on, LICAD checks to make sure the insulation of the piping does not collide with the threaded parts or variable spring hangers or constant hangers leading alongside it. The minimum width of a trapeze or riser clamp is displayed on the screen.

The *Pipe movements* are entered in three directions. The axes of the directions of movement are defined as in Figure 17 (or as described above).

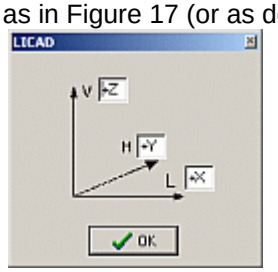

Figure 19: Definition of the directions of movement

A resulting component is calculated from the three path components. The maximum total path is limited to 900 mm.

Support data can also be read in from files insofar as they are available. The file menu is opened via the 'Open File' button. The file ending 'LIF' (LICAD Input File) is preset. The values deposited there are accordingly filled into the input fields of the mask. The values can however still be edited or supplemented.

The LIF files format corresponds to ASCII, the frame for a so-called INI file. An example of this can be found under chapter 7.8. These files can be made with PDMS or INTERGRAPH software.

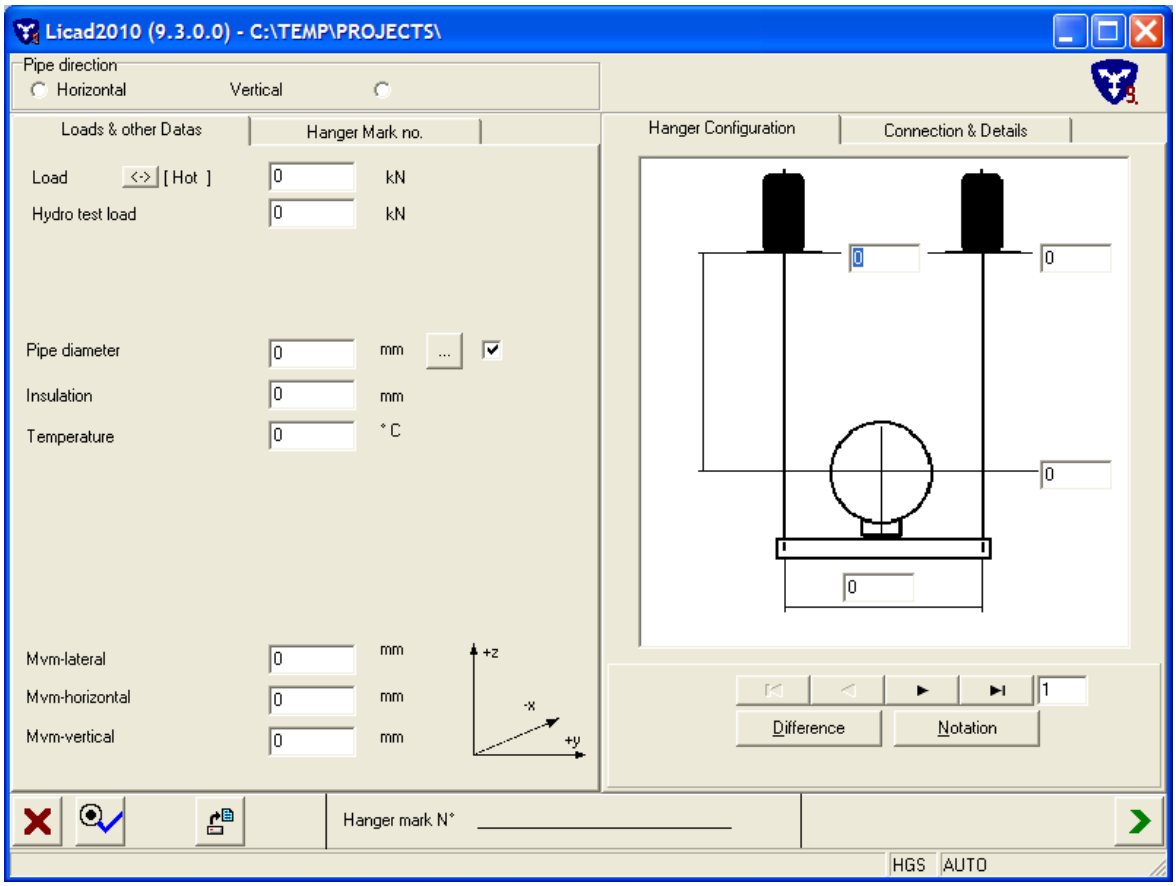

Figure 20: Alternative Input screen

To enable the alternative input screen refer to Option settings – System setup.

Dynamic loads

Figure 18 shows the corresponding screen for dynamically stressed supports.

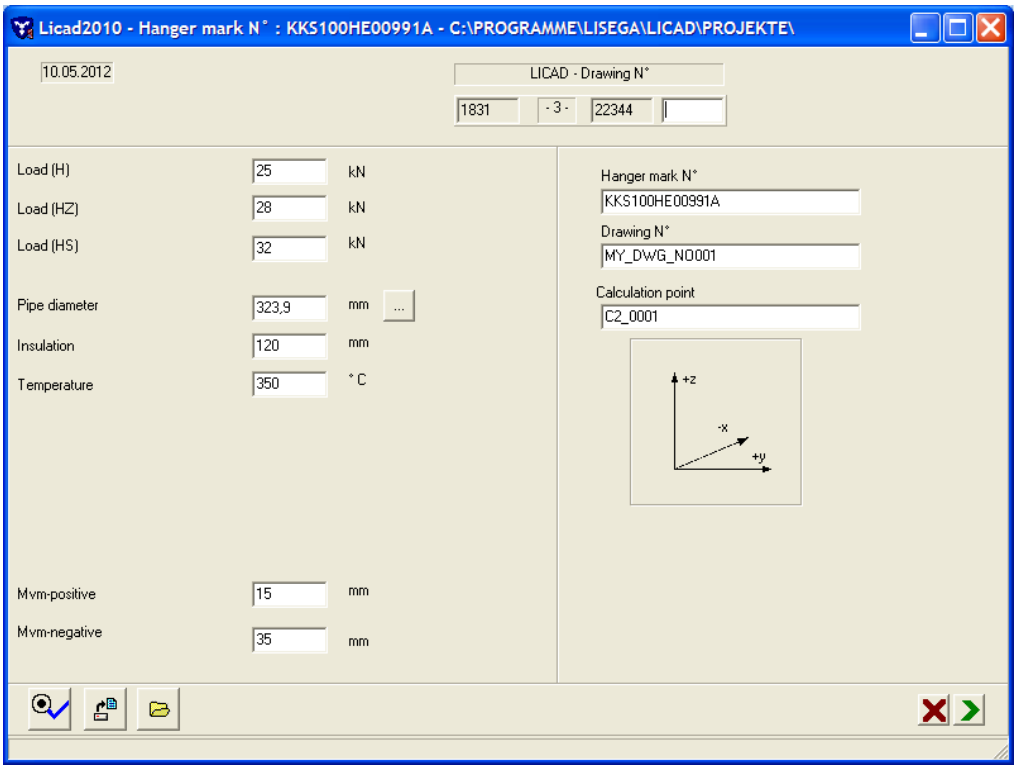

Figure 21: Mask for the input of dynamic nuclear pipe support data

The entries for the LICAD drawing number, the customer drawing number and the hanger mark number are to be done analogously to item 3.1.1.

For dynamic stress a maximum of 1000 kN for normal operation id permitted.

Snubbers and rigid supports as well as all components of product group 3 in the LISEGA catalog are designed for dynamic stress (See also Table 2 in Appendix 7.3).

With the *dynamic* components a distinction is made for the design of the size according to three load cases:

3. *Normal/Upset (H/Level A/B):* This includes all dynamic loads which might arise from the operation of the facility including water hammer forces resulting from switching, an operational basic earthquake, etc..
4. *Case of emergency (HZ/Level C):* This includes all dynamic loads which are outside of operation according to regulations, possibly a safety shutdown earthquake. After each such case a check of the entire pipe support is recommended.
5. *Case of damage (HS/Level D):* Dynamic loads from cases of damage. At the specified loads the yielding point of the components is reached. Exchange of components is recommended in any such case.

Therefore, for design according to nuclear engineering criteria, three input fields are provided corresponding to the various load cases.

The selection of pipe diameter is to be done analogously to item 3.1.1. The permissible temperatures are limited to 350 C for nuclear engineering applications.

With *dynamically* stressed supports the screen changes with regard to the input of the pipe directions: instead of three path components the possible inputs reduce to a ‘positive’ and a ‘negative’ path component. ‘+’ means lengthening of the snubber by the value entered and ‘-’ means contraction in the

snubber. Do *not* enter any negative values for dynamic stresses. Rigid supports are only selected when the path equals zero.

3.1.2 Pipe saddles & clamp bases for cold block (cryogenic) systems

The components in LISEGA product group 5 can be selected under this program item. These include:

Roller bearings, type 51 to 53
Pipe saddles, type 54
Lift-off restraints, type 55
Cold block clamp bases, type 56
Stanchions, type 58
U-bolts, type 40

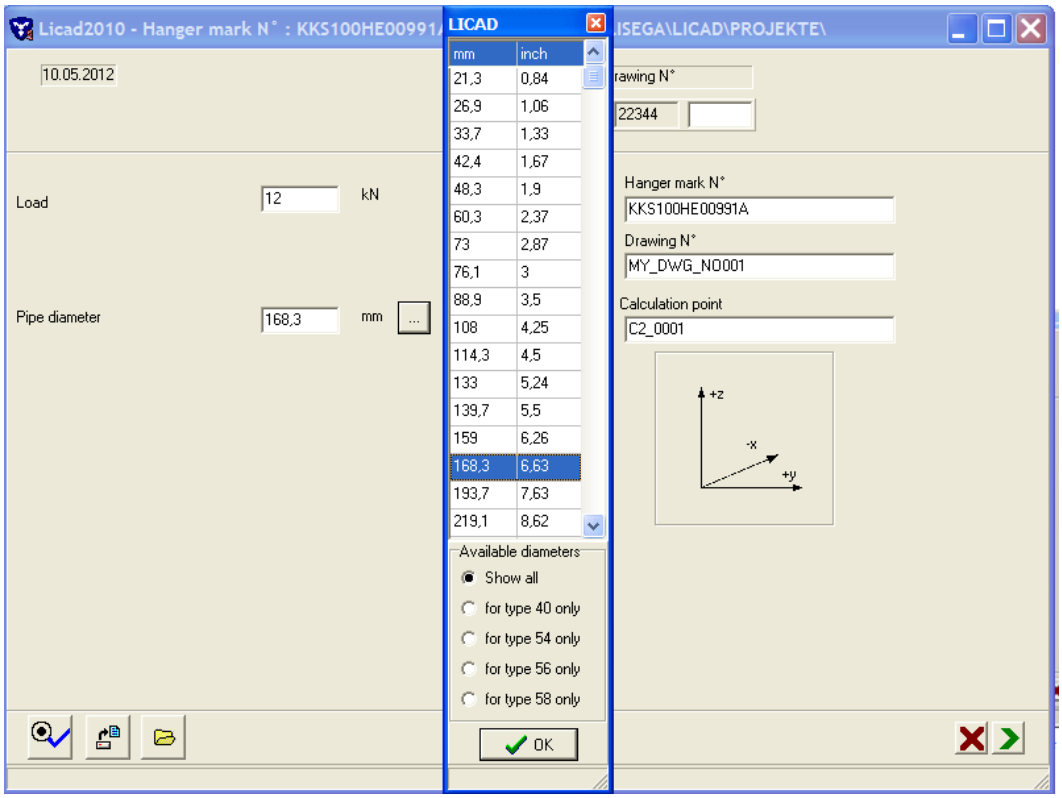

Figure 22: Entry mask for the design of pipe saddles and bearings

Note: Weld-on clamp bases type 57 can be selected under the static support configurations instead of standard clamp bases type 49.

Note: In contrast to the static and dynamic input screens, the pipe diameter must be entered exactly. It is recommended to use the values in the auxiliary table.

The input screen is to be used analogously to the static selection. In the first screen only the load and pipe diameter are required. The components or configuration are to be selected in the next screen. Further data must thereby be entered according to the configuration:

The material for U-bolts can be selected as in the catalog. The pipe diameter is required for the selection of clamp bases (configurations 2 to 6 7.2.3). A double cylinder roller bearing with or without lift-off restraint can also be additionally selected. The lift-off restraints are designed for LISEGA pipe saddles type 53.

To select pipe saddles (configurations 7-9 7.2.3) the radius must be indicated.

For cold block clamp bases the insulation thickness is required.

To select stanchions (configurations 11 to 16 7.2.3) the type of connection is to be indicated, besides the required installation height.

3.2 Selection of the configuration of supports

By entering the appropriate number, the correspondingly suitable support configuration can be selected from a collection of the commonest configurations. This happens either with the help of the navigation button or by entering a number.

Note: You will obtain an overview of all available support configurations if you place the cursor on the input field and press F1.

Press the 'Select' button to confirm the desired configuration.

Note: Pressing the END or RETURN key key or clicking on the picture gets the same result.

Note: The RETURN key has the same function on this screen as the tab key.

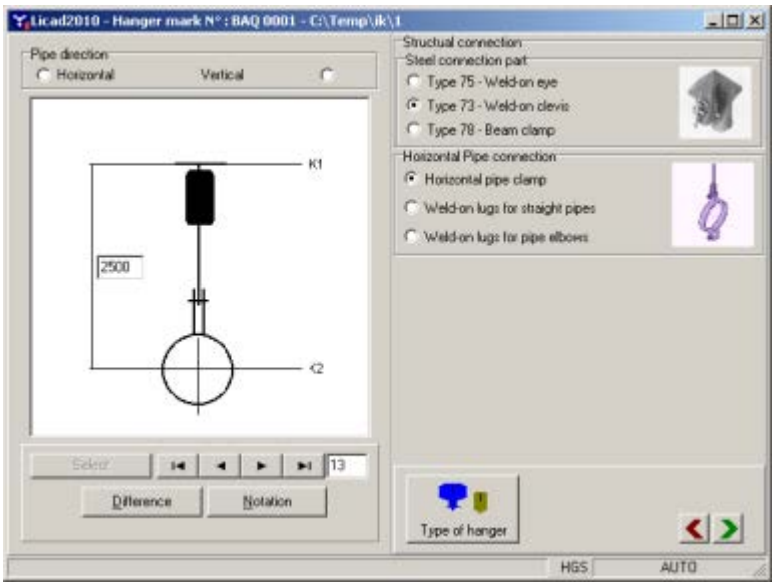

Figure 23: Display of pipe supports configuration

If further options are available for the configurations selected, they are displayed in the right side of the window (see Figure 20). These include the type of structural attachment, the type of horizontal pipe or riser clamp connection

or the final component

, if no pipe-surrounding component is desired.

3.3 Entering elevation

After selecting a support the input screen for the elevations or elevation differences will then appear.

Now the type of structural attachment (weld-on eye plate, weld-on clevis or beam clamp) is first to be determined for the suspensions. The program standardly suggests type 75 (weld-on eye plate) as the solution with the most favourable price.

The elevation is entered either in *Elevation differences* or in *cotes*.

With specifications for the widths of trapezes or riser clamps the minimum and maximum sizes possible are displayed by the program. The minimum width is dependent on the pipe diameter and the insulation thickness entered.

If the heights are below the minimum installation dimension for the selected support configuration, a HELP screen (Figure 21) displays the number of the entry field and the feasible minimum dimension.

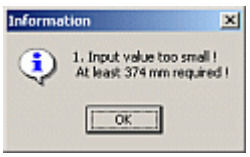

Figure 24: Window for Input of the elevations

The maximum installation dimensions are therefore also displayed for shockabsorbers, whereby the parameters *with* and *without extension* are differentiated.

The maximum values shown for rigid struts also contain over.lengths which, as far as the nominal load is concerned, are only available for reduced load values.

3.4 Specification of the type of hanger

Normally the program automatically selects the optimal variable spring or constant hanger using the performance data entered (load/path). But in order to be able also to meet special customer specifications, manual specification of a certain type of hanger is also possible. With this procedure only the specifications on load and path are checked by the program for compatibility with the hanger type. Values which might be specified for reserves are not taken into consideration.

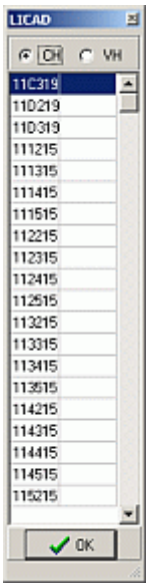

Figure 25: Hanger pre-selection

Specification of the hanger is carried out on the same screen as for the elevations (Figure 20). Select the button ‘hanger type’ to denote the hanger and select the corresponding item number from the table.

3.5 Alternative selection of clamp base

On the basis of the preset load and temperature, LICAD selects the most favorable pipe clamp base for the pipe diameter. If an insulation thickness is also preset, the program checks to make sure the insulation will not collide with the foot of the clamp base or even enclose it. In case of a problem, the program proposes an alternative selection of clamp base.

3.6 Selection of pipe supports

Using the installation heights supplied, LICAD assembles the components required in the support chain. For spring pipe supports, corresponding extensions Type 29 are employed.

Note: The use of Type 29 extensions is only possible if the spring hangers to be seated are selected with the 'PTFE slide plates' option (Chapter 2.7.8).

Note: If the installation heights supplied are too low, LICAD will still select a support and correct the lower installation height correspondingly.

3.7 Graphic representation

After checking the values that have been entered a true to scale drawing will be displayed on the screen (Figure 23). The selection can either be confirmed or rejected.

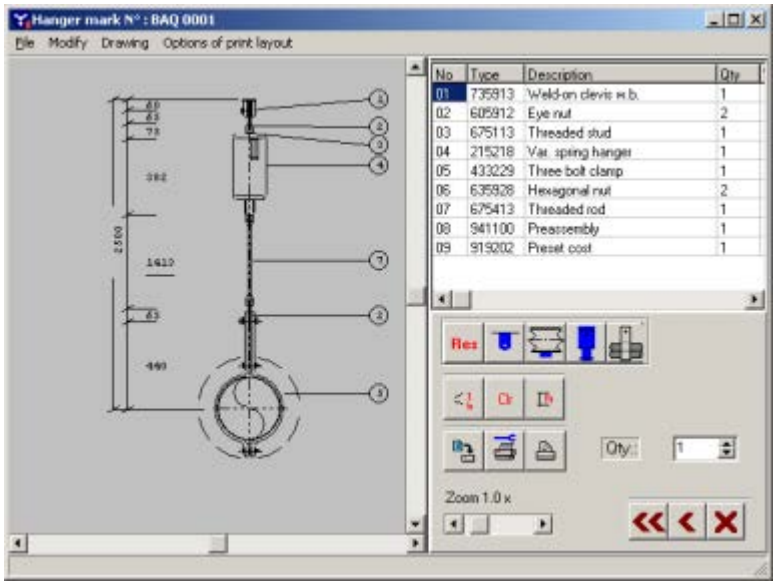

Figure 26: True to scale drawing of a pipe support

In addition to the drawing dimensioning, item numbers are displayed, as well as the parts lists that go with them, with article numbers and designations.

By clicking the right-hand mouse button the travel stop position, spring rate, load difference, the remaining travel are given and the welding thickness.

3.8 Display of current hanger data

By moving the mouse over the drawing and pressing the right-hand mouse button, a table appears with the current setting parameters for the support created. Beside the support data entered the following details are shown:

The hot and cold loads calculated

The blocking load

The actual load difference in spring hangers

The spring rate in spring hangers

The actual possible travel in spring and constant hangers

The blocking position

The effective travel resulting from the 3 travel components

The remaining travel reserves upwards or downwards

The recommended weld seam thickness for the building connection component

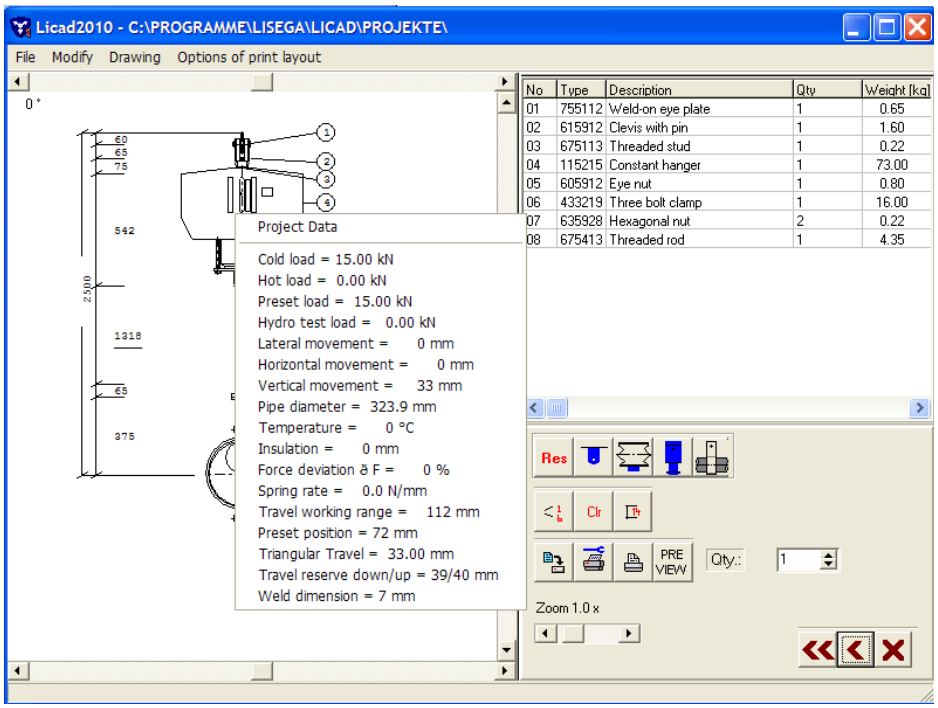

Figure 27: Popup menu with hanger data information

3.9 Alternative Figures

Some components in the drawing can be rotated by entering a number for a second view. The structural

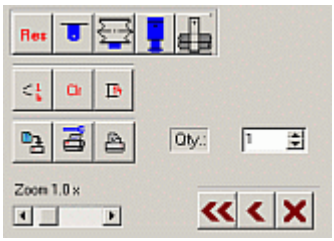

Figure 28: Section of graphics screen

attachment parts can be illustrated with the customer's sectional steel.

Use the button 'RES' if you wish to reset the modifications.

3.10 The location plan

In Figure 25 the position of the support in the site plan can be entered. The screen can be clicked in via the menu 'Processing - processing site plan'.

Five figures each can be assigned to the main directional axes of the building plan, furthermore, the position of the pipe or clamp (PA), the position of the steel attachment (SA) and the corresponding angle

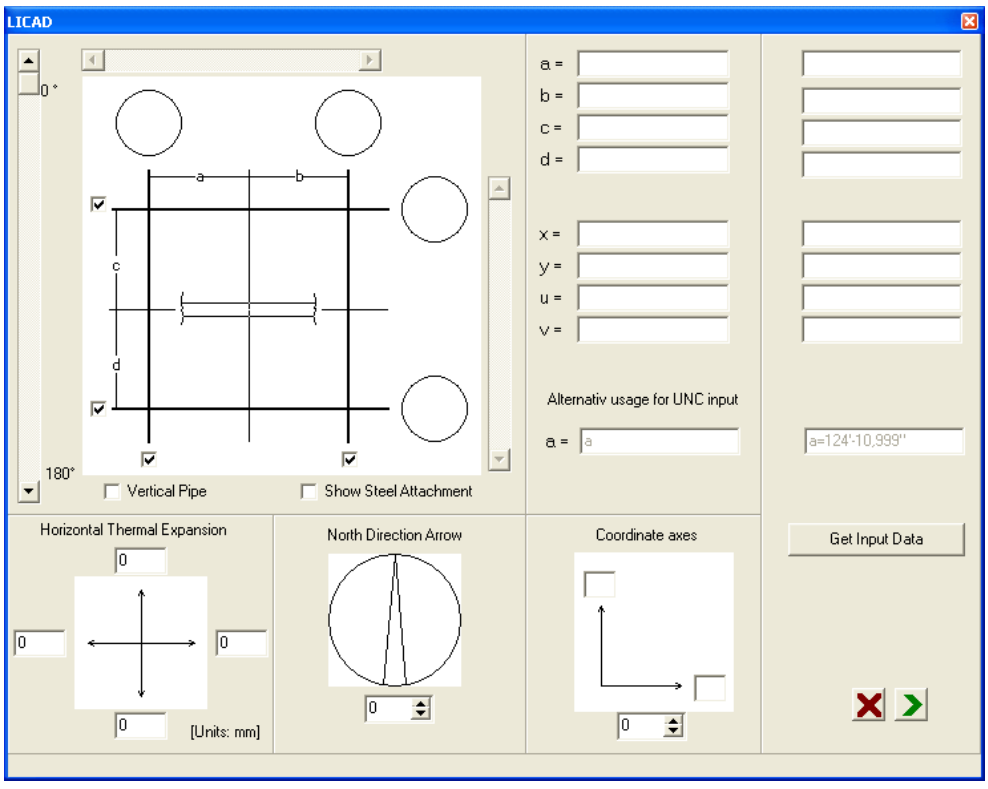

Figure 29: Location plan and schematic display of pipe axis

can be set.

3.11 North arrow

A north point can furthermore be defined for the drawing (Figure 26). This is printed beside the site plan insofar as it has been programmed into the options. The screen can be clicked in via the menu ‘Processing - processing site plan’.

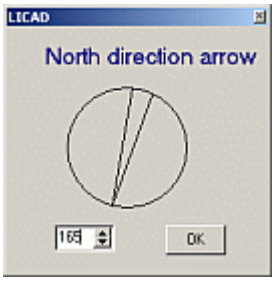

Figure 30: Entry screen for north point

3.12 3D Reference Coordinates

Under the menu ‘Processing - 3D Reference Coordinates’ call up the dialog as displayed in Figure 27. The input space ‘Coordinates’ has no significance for the normal use of the program. Reference coordinates based on the pipe centre are described only in the creation of 3D graphics (with the aid of the MDL application of Intergraph).

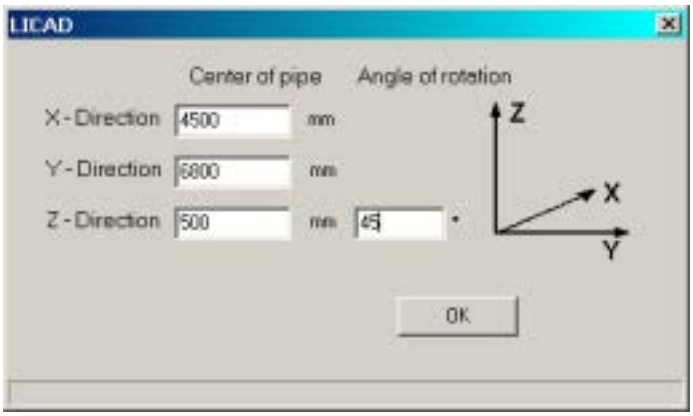

Figure 31: Entry screen for 3D Reference Coordinates

3.13 Changing weld seam thickness

As described under Section 2.6.7, in LICAD the minimum weld seam thicknesses are supplied. This information can be edited via the menu point “Change weld seam”, to be found in the „Edit“ menu.

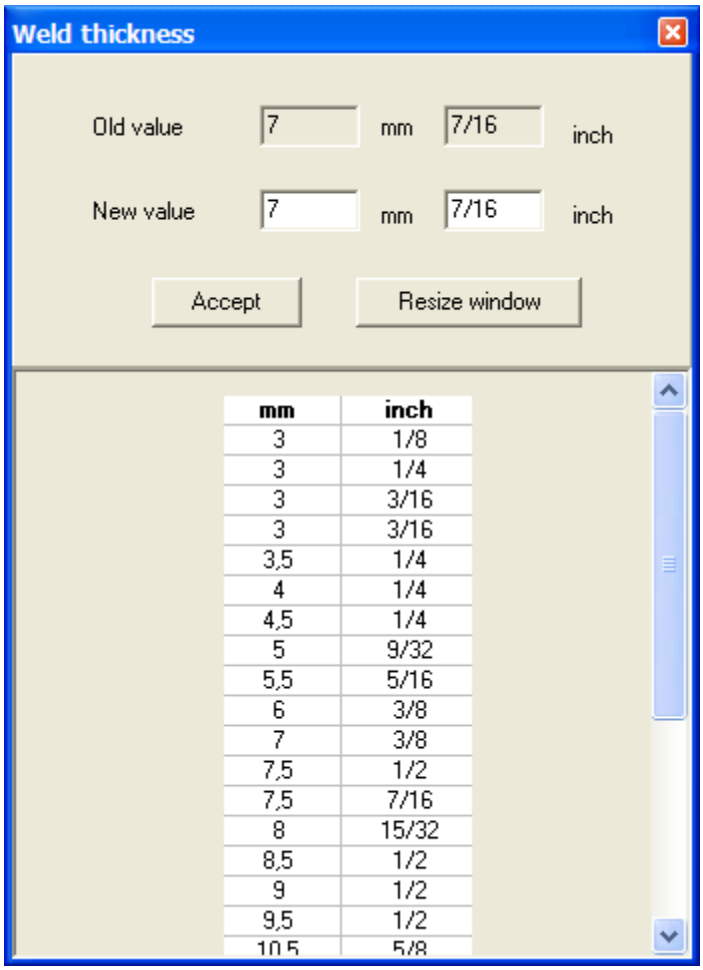

Figure 32: Changing weld seam thickness

The table shown under the window can be displayed via the “Show table >>” button. Care must be taken that both the millimeter and inch details can be adequately modified.

3.14 Saving and printing out a drawing

Saving and printing out a drawing for program points following later. The drawing should be saved on completion of entries. This can be effected via the key combination Ctrl + S or via the button with the security symbol.

The drawing can be printed out at this point (Ctrl + P), checking the printer setting if necessary.

The drawings can as a matter of course be printed out later insofar as they have been saved.

3.15 Generation of 3D transfer files

For later processing of the support as a 3D graphic in the PDMS, MicroStation/PDS or SupportModeler programs, the files required can be generated from here. The corresponding functions can be accessed from the file menu (**Figure 28**) for the generation of LOF and L3D files.

An exact description of this can be found further down in this manual in the chapter ‘3D display of supports in PDS (MicroStation)’ and ‘3D display of supports in PDMS’.

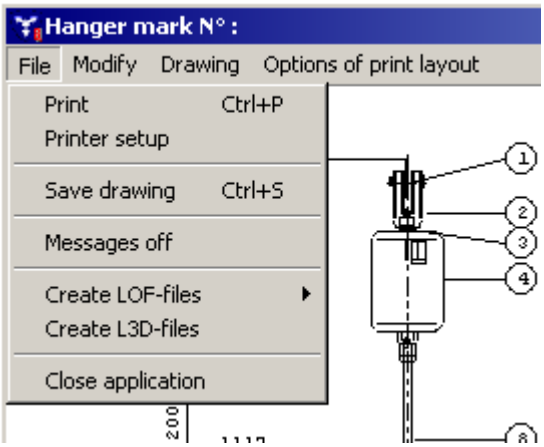

Figure 33: File menu

4 Additional programs

4.1 Supplementing a parts list

In order to supplement the parts list of a drawing with additional articles choose button ‘Modify’ from the main menu and double click to the bill of material (BOM).

The items of the standard supports will be displayed at the top of the screen and at the bottom of the screen the supplemented items. The number of items is limited to 10 per drawing.

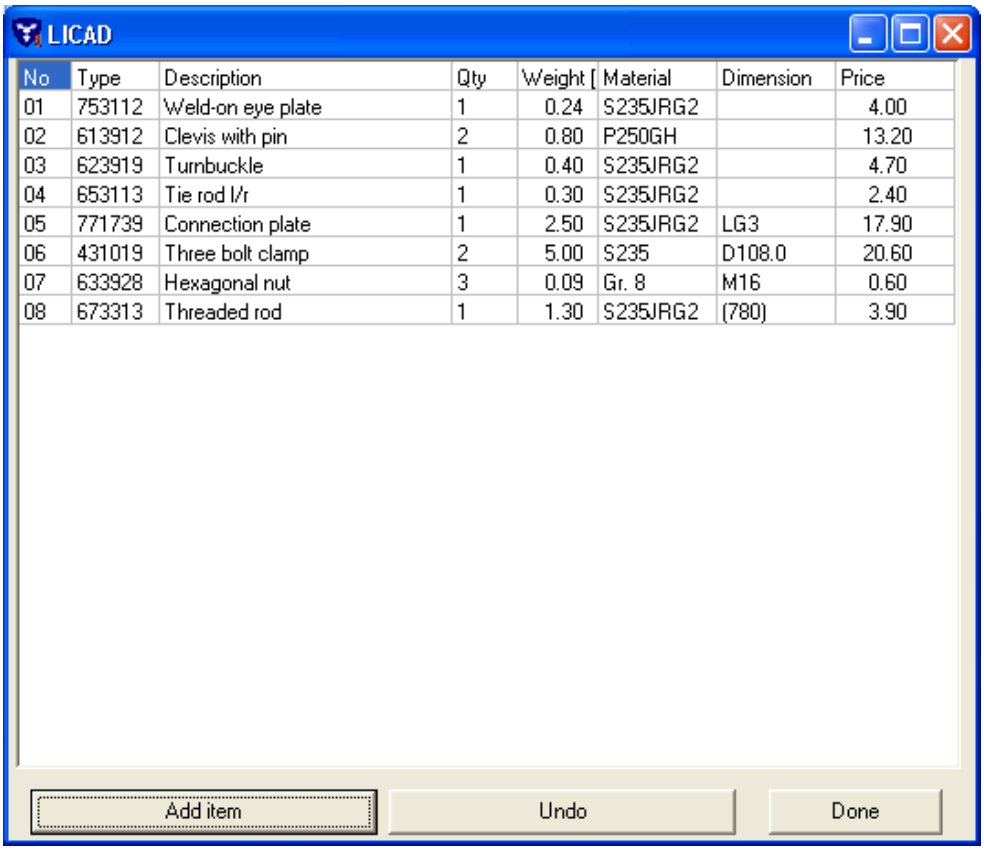

Figure 34: Supplementing parts lists

4.1.1 Completion of parts list during the drawing process

Double click on the parts list, in picture 23, to open a new window. Here further positions can be added to the parts list. Use the button "New Positions" to add up to 10 lines. The respective last line may be deleted by pressing "Undo". Button "Finished" closes the window and the drawing may be printed. The added positions will be saved with the drawing.

4.2 Revising drawings

Saved drawings can later be loaded from the data bank into the program or altered.

A drawing to be altered should be called up with the appropriate LICAD drawing no. (which you can, for example, have displayed with the directory). An alteration is labeled by the program with the revision number.A modification can be signalized by the program via a modified revision number.

Important: No backup copies are automatically made by the program. So for this reason you should first copy the original drawing on a disk or make a backup copy with ‘Copying drawings’.

Figure 30 shows the appropriate mask.

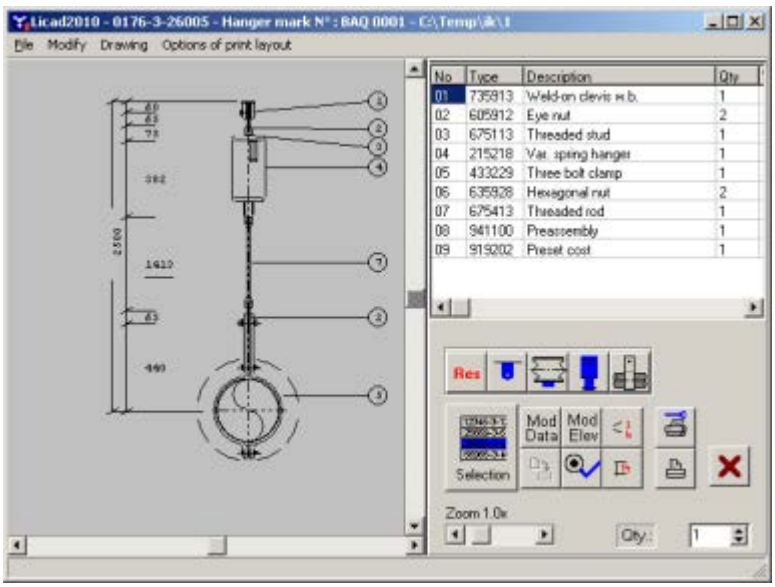

Figure 35: Example for calling up a drawing for revision

The configuration of the support can also of course be changed.

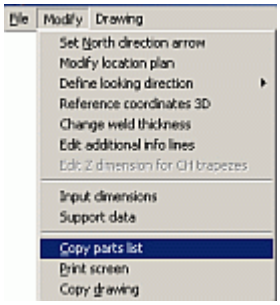

Figure 36: Tools for copying

Under the menu ‘Modify’, tools for copying individual drawing components are available. The parts list or the drawing is transferred to the intermediate tray and can be copied from there into text programs. The background colour of the graphic can be altered via ‘Options - System Settings’.

4.3 Individual selection of hangers and pipe clamps/bearings

Variable spring and constant hangers or pipe bearings/clamps can also be selected individually by the program. After calling up the program ‘Catalog’ in the main menu Figure 32 will appear.

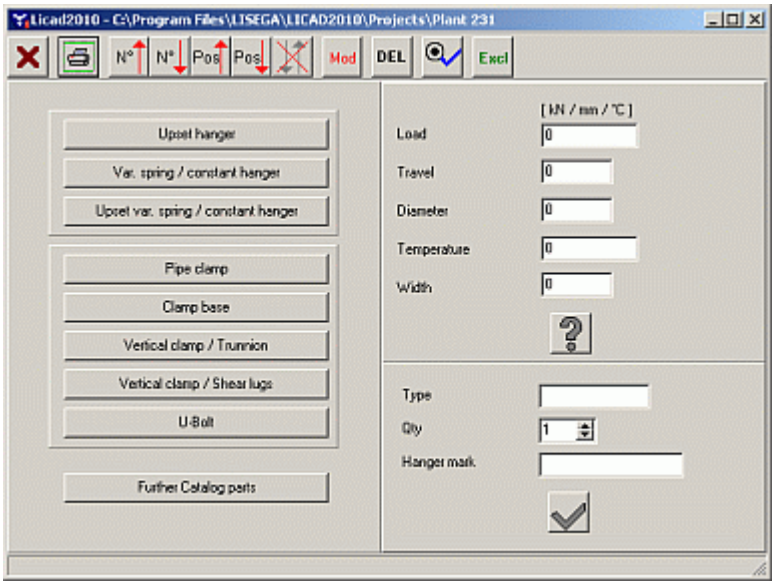

Figure 37: Menu screen for the selection of individual items

Before selecting parts the specification data should be determined.
If a new list is to be drawn up then delete list with the 'DEL' button. Otherwise, additional articles can be added to the existing list.

The article chosen will be indicated by the program. If required enter a hanger mark number and the desired number of pieces for this article.

With the 'Further Catalog parts' button you can select the rest of the catalog parts (Figure 33). In the left upper window you can pre-select the LISEGA product groups.
If a new table is to be created, the old table must first be deleted with the 'Del' button; otherwise, further articles can be added to the existing list.

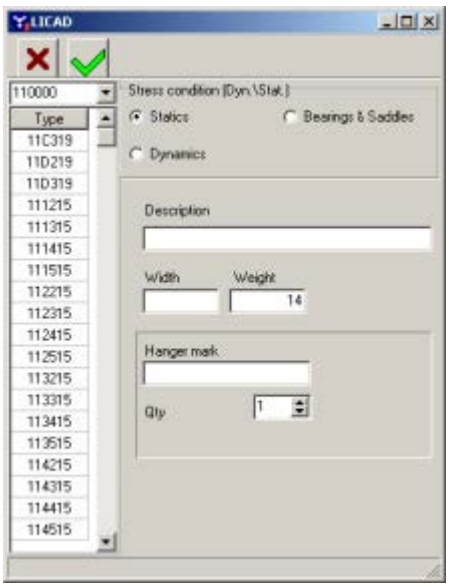

Figure 38: Menu screen for selection of further components

To print the complete parts list change to the 'Print' button. The contents of the table can be seen via the 'Page Preview / Print' button. As an option, the table can be sorted according to position or article numbers and worked on via the 'MOD' botton.

4.4 Project data administration

Drawings of pipe supports prepared with LICAD are saved in the files
KONSTR8.DB,
KONSTR8.PX,
KONSTZ8.DB,
KONSTZ8.PX,
KONETR8.DB,
PRJINF8.DB,
KONBTL8.DB and
KONBTL8.PX.
These files are put into the current LICAD directory
<LICAD-Installation path>/projects if no other specifications have been made.

But it is also possible to save individual projects in different directories and thereby also in different files. To do so, go from the main menu to the sub-menu and call up the project data program (Figure 34).

It is however also possible to store the individual projects in various catalogs and thereby in different files. The menu for the administration of projects can be called up via the main screen: menu ‘File - Project data administration‘.

After calling up the program, the project path programmed at the moment is displayed as an ‘active directory’ in the upper part of the screen.

The path can be switched to the left centre screen window via a double click. If project files already exist in a directory, they are displayed in the ‘Project files’ window; further information on this project is listed in the window below it.

The program first switches to the chosen path when you click the lower button ‘Change to <new path>‘. If there are not yet any files in this path, the message ‘New directory was prepared’ is displayed. If files already exist, the message ‘directory was changed’ is displayed.

With the aid of the button ‘Prepare new directory’ and the corresponding entry on the left in the window, new directories can be created.

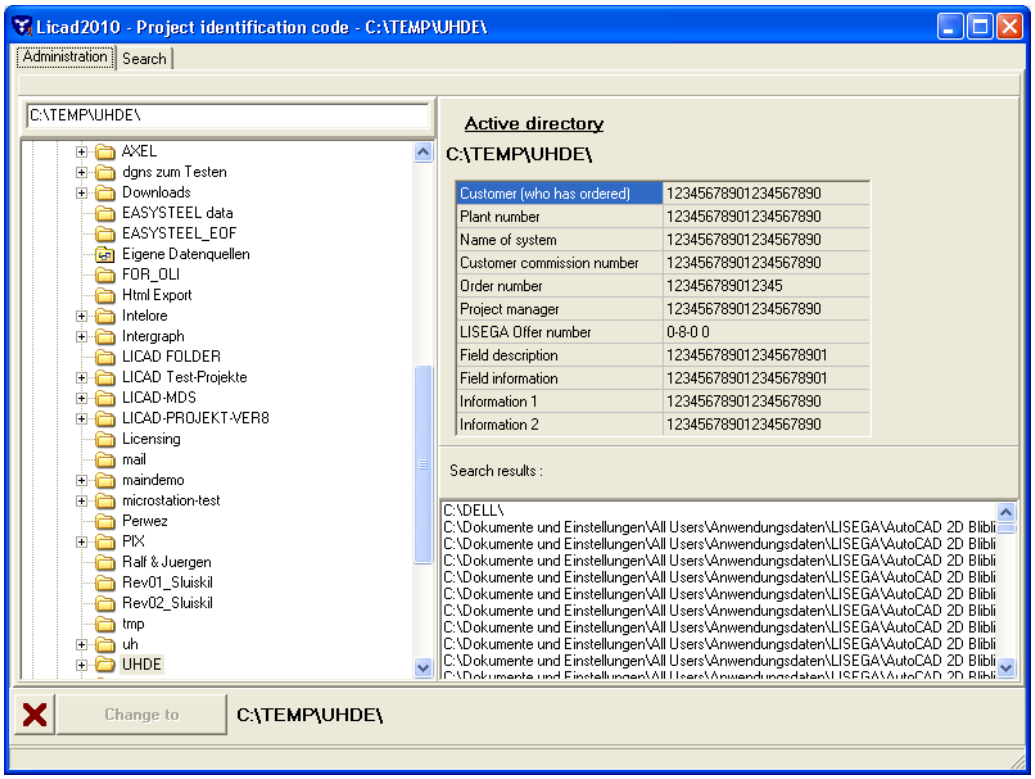

Figure 39: The mask for project data administration

Information is secured in the PRJINF8.DB file. On switching to another project path, all parameters in the options for this project are automatically updated.

4.5 Search projects

You will reach the menu (Figure 35) for project searching out of the main screen: menu “file – project searching”.

The background of this program is the locating of already existing LICAD projects which are scattered on the local disc or in the network. The handling is simple: highlight the drive and start searching. Optionally you can also search for a special drawing number or a support number.

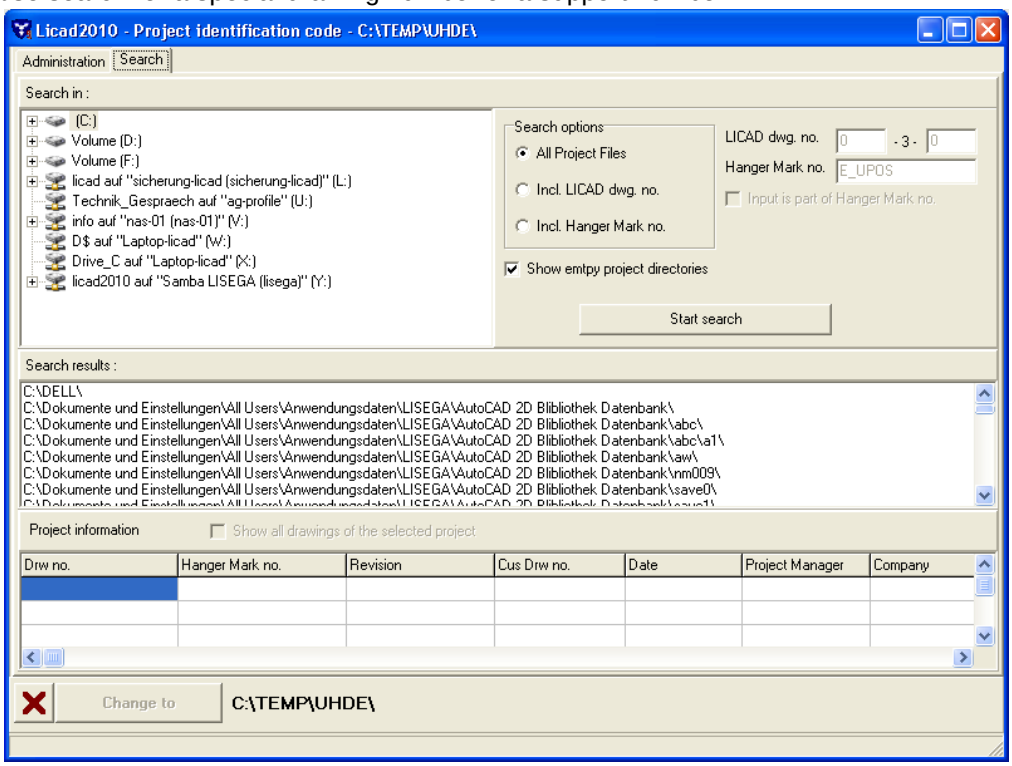

Figure 40: The mask for project search

4.6 Deleting drawings

This program point can be found in the main screen under the menu ‘Edit - Delete drawings’.

Select one or more drawings from the left-hand window (use the ‘Shift’ and/or ‘Ctrl’ buttons for multiple marking) and shift these with the aid of the ‘>>‘ button to the right-hand window.

Each deletion must be individually confirmed or enter ‘A’ if all drawings are to be deleted with confirmation request. The sub-item number and the system designation that go with them are also displayed as a means of checking. The deleted drawing numbers are blocked by the program for further use.

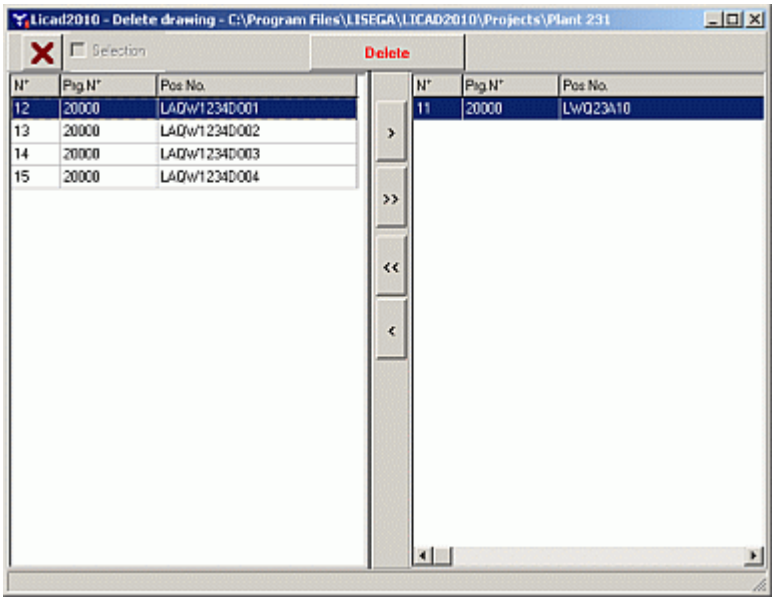

Figure 41: Deleting drawings

4.7 Backup and copy drawings

With the program item ‘Create backup of stored drawings’ three functions are basically made possible: The *saving* of drawings, or preparing drawings for an electronic order or transferring them to another LICAD user.

The program is called up from the main screen under the menu ‘File - Create backup of stored drawings’ .

Note: Special attention is drawn to the possibility of electronic ordering.

On transfer, supplements to the parts lists are also copied into the security file together with the drawings data from the current project directory.
Save data at regular intervals. Unfortunately computers tend to crash at unexpected moments!

The drawing data are stored in one archive file. How does the procedure works: the relevant drawings must first be selected from the left-hand selection window and put in the window on the right. The target directory for securing data is to be determined in the directory window. A file name is to be entered after

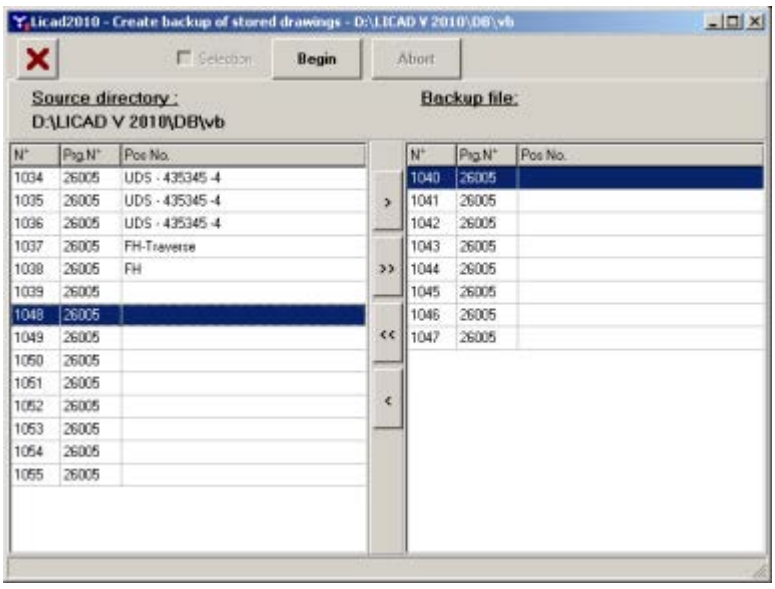

Figure 42: Screen for saving data

pressing the ‘Begin’ button. The file will get the ending LBF automatically.

4.8 Determining number of drawings

The number of drawings in a project is displayed in the status bar of diverse selection windows, as exemplified in the next screen.

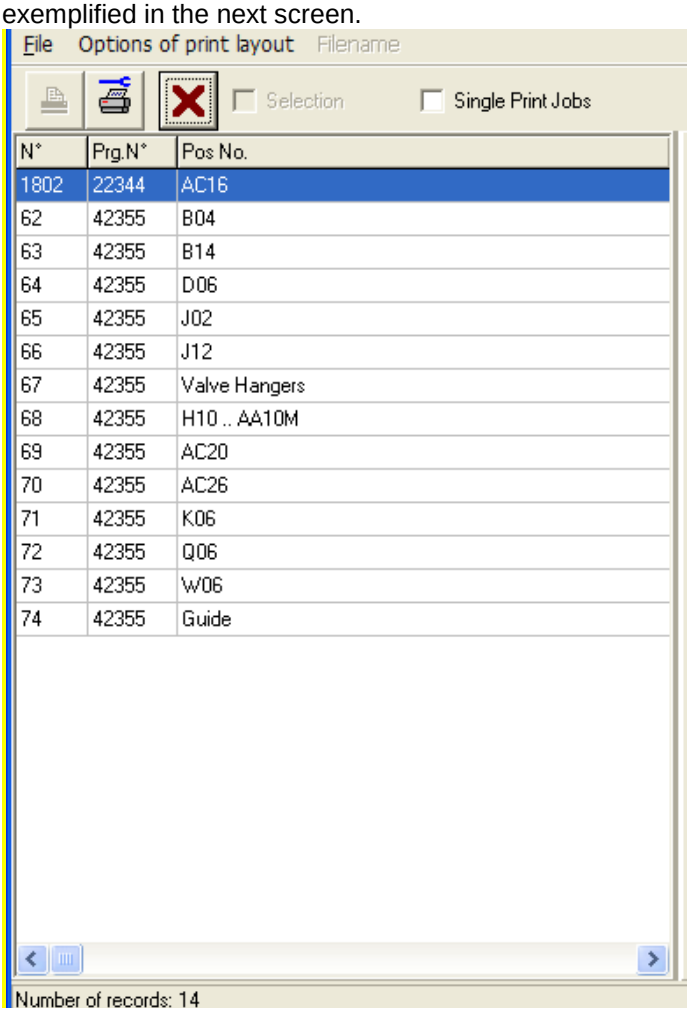

Figure 43: Display of number of drawings

4.9 Reading in backuped drawings

To feed back (saved) drawings select the appropriate directory and archive file (*.LBF). Check to see whether old drawing numbers (possibly with a higher revision number) could be overwritten. All or only part of the drawings can be fed back from the archive.

It does not matter from which LICAD user the drawings come. The content of the archive can be looked at with the relevant program item. First check the current project directory.

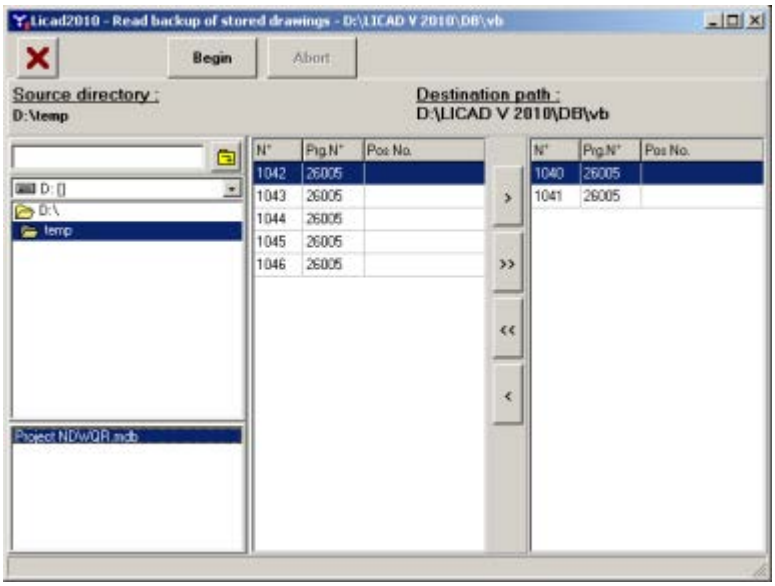

Figure 44: Control screen for reading back stored drawings

In the lower left-hand window a selection of archive data appears with the ending '*.LBF'. To have drawings from an archive file displayed, click on an LBF file and it will be shown in the middle window. The archive contents are added to the following files in the current project directory:

KONSTR8.DB, KONSTZ8.DB KONETR8.DB, PRJINF8.DB and KONBTL8.DB

In the case of selective saving, these files should be saved together with the files FIRDAT8.DB from the LICAD/DB directory. To realize a new installation, install the program (as per 1.3) first, then accordingly copy the files listed above into the directories.

Note: Older backup files in LICAD Version 8.0.0 have the ending 'MDB'. Before retrieving them these files must be renamed with the ending 'LBF'.

4.10 Sending drawings by e-mail

Drawings can be send by e-mail, if a mail program is installed, using the MAPI interface (e.g.. MS-Outlook oder MS-Outlook Express) .

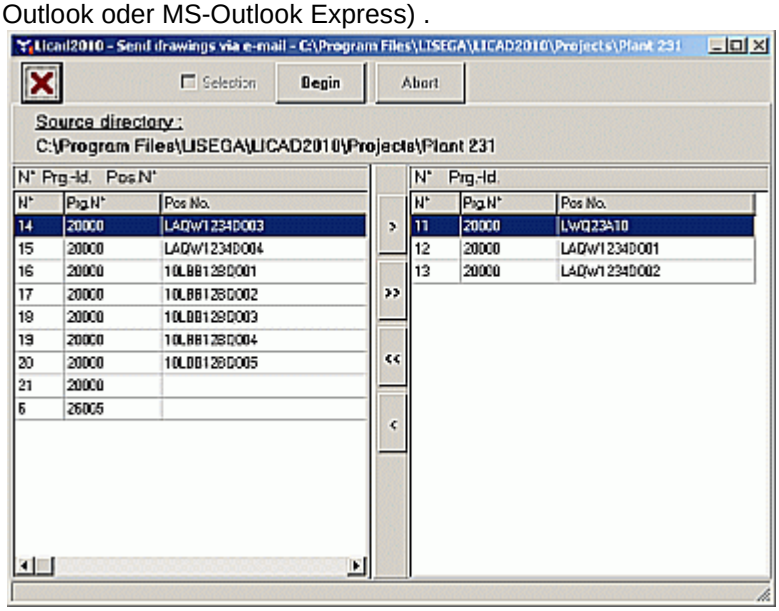

Figure 45: Sending drawings by e-mail

Select the drawings as usual that are to be sent, then press 'Start' button.

The drawings selected are thereby stored and transferred as attachments to the
e-mail program. The window for sending a new message is opened automatically.
Enter the receiver here. In the e-mail text this list of the transferred drawings is issued automatically.

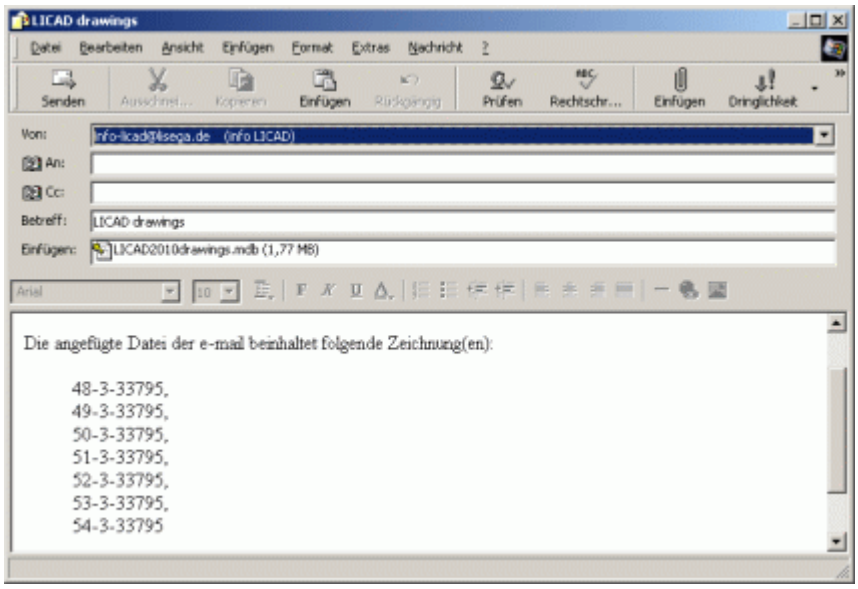

Figure 46: 'Send e-mail' window of the mail program

4.11 Selection of drawings

The program is called up from 'Main screen- File menu - Select drawings'.

The selection of drawings aims to simplify drawing management. Seven different parameters can be set according toFigure 41. The search process starts via the 'GO' button. The drawing selection is stored via the 'Save' button.

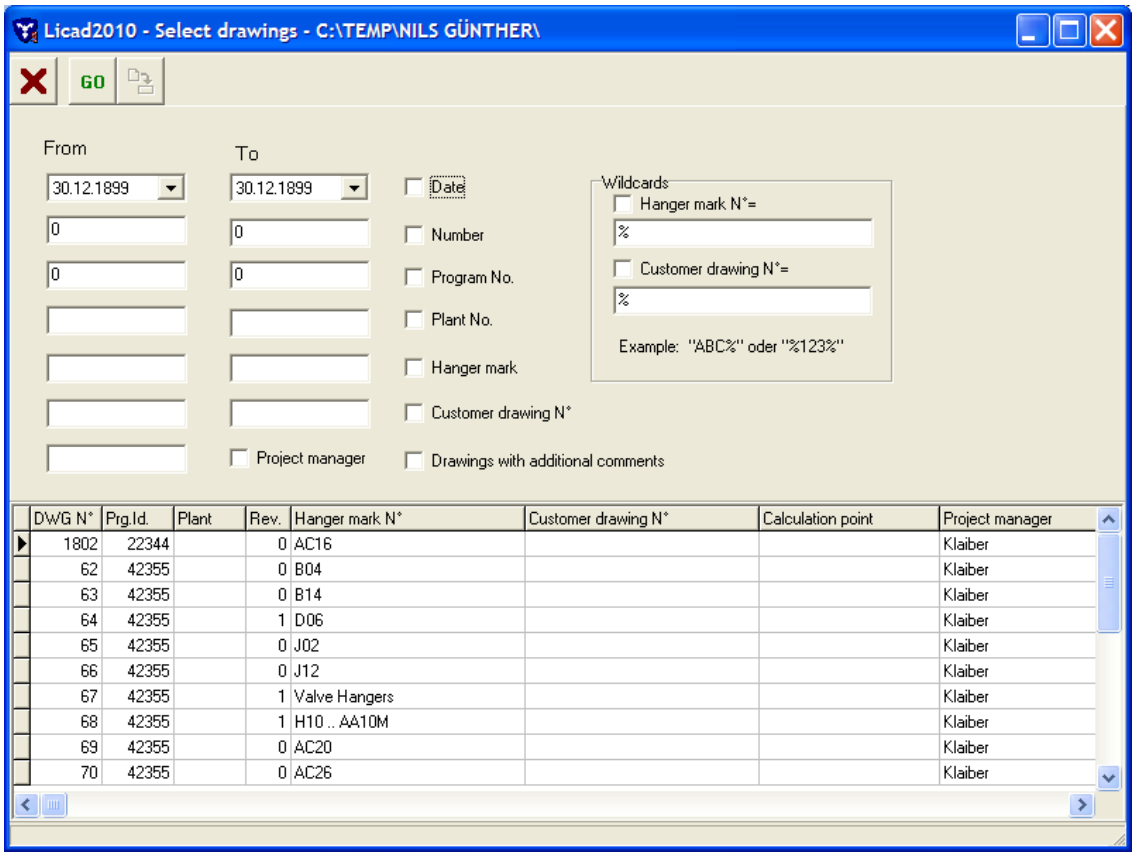

Figure 47: Screen for drawing selection

The stored selection can be activated in the other programs by checking on the selection field (see picture below).

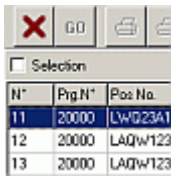

Figure 48: Activating the drawing selection

LICAD notes the setting of the selection field. If the option is activated in a program part, it stays active till it is switched off again. At the start of the program the stored setting is reactivated. At the end, the last setting is stored.

For searching so-called place holders or wild cards can be used. For example, the entry **ABC%** would filter all drawings with the combination **"ABC"**. Or **%A0%** would filter all drawings having an A at the second place and an **0** at the third.

4.12 Importing support system data

Support arrangements can also be created automatically if a corresponding EXCEL tables or text files list with data are available. For this, the program 'Import supports data' is accessed from the main menu. The following window then appears:

Note: The Alias Company's IsoGen program and Sigma company's Pipe2 make special export data available which can be read directly here.

The reading program module is accessed from the main window by way of the menu entry 'Read in support data' in the file menu. After that the following window appears:

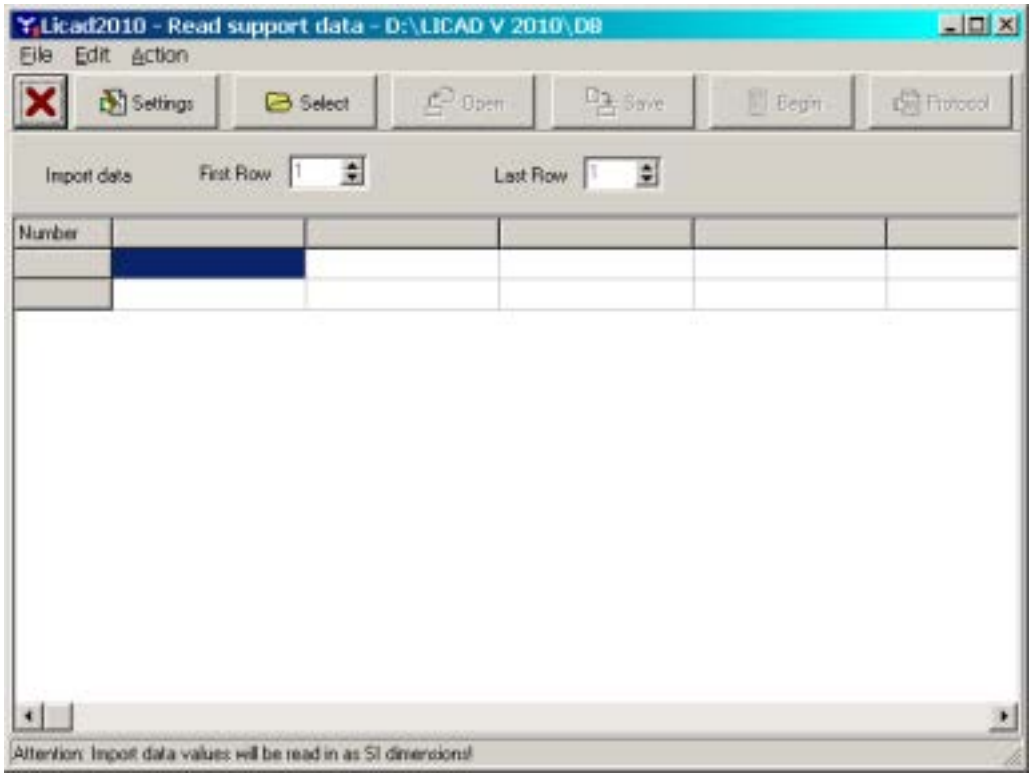

Figure 49: Importing configuration data from an Excel table

4.12.1 Five steps are required to import supports data

1st step: The settings for the import procedure are to be made in the settings windows. This window is reached via the 'Settings' button (see Figure 43).

2nd step: A file containing the relevant data must be opened via the 'Load' button. If the import settings, available via the 'Settings' button have not yet been made, the settings window first appears. If it is an Excel file, Excel will be started up and the worksheet shown (Excel must be available on the PC).

IMPORTANT: A column with the support configurations is to be defined. These must conform according to section 7.2 in the manual. The changes can be stored, if required. EXCEL must however remain open till the import is completed.

3rd step: The input field for 'First Row', determine the number of rows from which the data is to be entered. Let the program also know the last line to be imported.

4th step: The column headings must be defined. For this, click on the respective headline of a column. From the drop down window then appearing, select a corresponding input (e.g. load, temperature, etc). Not all columns need be defined. It is sufficient if the essential data are available for the design of a support (such as load, pipe diameter, temperature, 'z' travel, support configuration and installation height). The allocation of field names proceeds automatically for Pipe2 or IsoGen export files.

Note: For riser clamps, a selection care be made between trunnions and shear lugs

Note: For the structural attachment, Type 75 is preset, as far as this is not defined in the table.

Note: The column headings defined by the user can be stored in a file for subsequent use (see below).

Note: The column headings defined by the user can be stored in a file for later use (see below).

5 th step: With the ‘Start’ button, the calculation of the supports using the selected data is started. If problems arise during calculation they are recorded. After this a mask with the import protocol is automatically accessed if errors or warnings are noted.

Via the ‘Info’ button, the LICAD drawing numbers for the imported data are shown. Further, incorrectly applied drawings can be filtered out with the help of an error code number. Drawings with an error code number can be correspondingly corrected via the button ‘Modify’ in the main window.

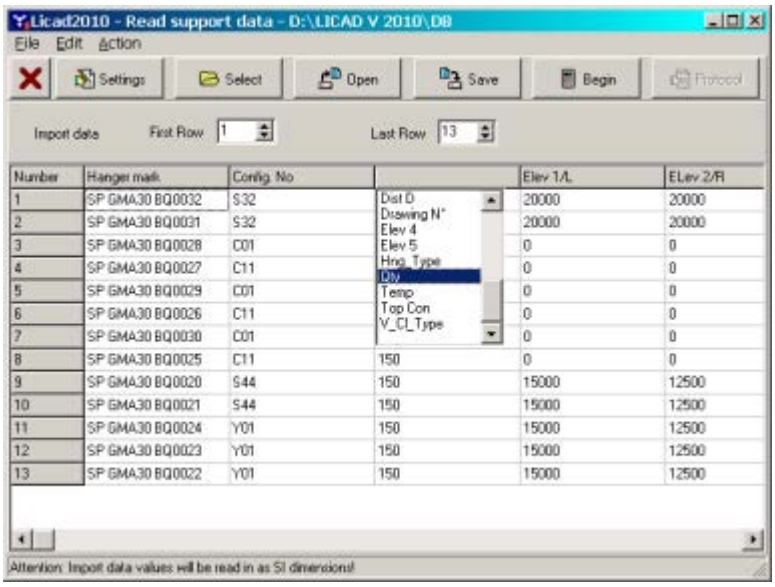

Figure 50: Arranging Excel columns in the LICAD data fields

4.12.2 Storing and loading selection of column headings

The definition of column headings can be stored in a file. For this, click on the button ‘Store selection’ and choose a name for the file in the file save menu then appearing. The ending ‘LFG’ will be automatically added to the file name.
To download a file with information on the column headings, the button ‘Open selection’ is provided.

IMPORTANT: An installation height (ELEV X) and an installation difference (DIM X) can be used simultaneously as column headings. Then the installation differences are first taken over. If data are also available for the installation heights of a support, these are automatically applied. In this way it is possible to export data from LICAD via the ‘Support data on ASCII’ program and subsequently re-import it here (‘File transfer from LICAD 7’).

The settings of the technical specifications for the selection of supports are to be made before the import.

4.12.3 Meaning of abbreviations for the column headings:

Axis 1 Marking of 1 axis in location plan (max. 5 places)
Axis 2 Marking of 2 axis in location plan (max. 5 places)
Axis 3 Marking of 3 axis in location plan (max. 5 places)
Axis 4 Marking of 4 axis in location plan (max. 5 places)
Botton Con Lower connection part, if the support is designed without a clamp. (0,60, 61, 74, 63, 73, 75)
CalcNo Number of the Calculation point (max. 32 digits)
Config. No. Number of support configuration (see manual, 7.2)
Cust. DWG No. Customer drawing number (max. 25 places)

DIM 1 DIM 2 DIM 3 DIM 4	Difference installation height (one or more differences are needed according to the configuration)
Dist A	Location plan: Distance between 1. axis and centre of pipe
Dist B	Location plan: Distance between 2. axis and centre of pipe
Dist C	Location plan: Distance between 3. axis and centre of pipe
Dist D	Location plan: Distance between 4. axis and centre of pipe
Drawing N°	LICAD drawing number (e.g. for taking over data from another LICAD version)
Elev 1/L	1st height notation, or lefthand notation in double structural attachment.
Elev 2/R	2nd height notation, or righthand notation in double structural attachment
Elev 3 Elev 4 Elev 5	
Hanger mark	Hanger mark number (max. 32 digits)
Hng_Type	Specification of the type of hanger (Input of a six-digit hanger type number, but limited to Type 11 or 21. Other types are determined by the hanger configuration.)
Hydro load	Test load e.g. for hydrostatic test
Insul	Pipe insulation thickness
Load	Cold or hot load (depends to specification settings)
Move X	Pipe movement into pipe direction
Move Y	Pipe movement laterally to pipe direction
Move Z	Pipe movement in vertical direction
Pipe	Pipe diameter
Qty	Qty. of supports
Rot_X_Turn	Rotation round high axis for PDS transfer
Rot_Y_Turn	Rotation round high axis for PDS transfer
Rot_Z_Turn	Rotation round high axis for PDS transfer
Temp	Temperature
Top Con	Structural attachment type (73, 74, 75, 76, 78 if option ‘Selection with connection parts to building structure’ is set, otherwise 60, 61, 63)
V_Cl_Type	Vertical pipe clamps (Type 46, 48) . Type 46 encase type 45 too.
Width	Pin to pin dimension of Trapezes or riser clamps
X_Coor Y_Coor Z_Coor	Reference point pipe connection for PDS transfer (X_Coor, Y_Coor, Z_Coor are required for the transfer of supports to PDS or SmartPlant3D)
Stanchion Feet att	(V)ertical load / (S)liding / (F)ixed allowed
Clamp base type	input either 49 or 57
Load_Axial_h Load_Axial_l	
Type 11/25 feet/plate	Input Y or N (Allowed Yes / No)

Attention : The values taken over are treated as SI or UNC units depending on the setting in the import options.

4.12.4 Import settings

Details of the riser clamps and installation heights to be used as standard, if these are not yet known, can be supplied here.

Note: The use of standard installation heights enables the calculation of a support, which would be impossible if the dimensions were not available.

It is also possible now to import data in the SI or UNC system independently of the setting of the unit system in Options (LICAD main menu). The setting is now made directly here.

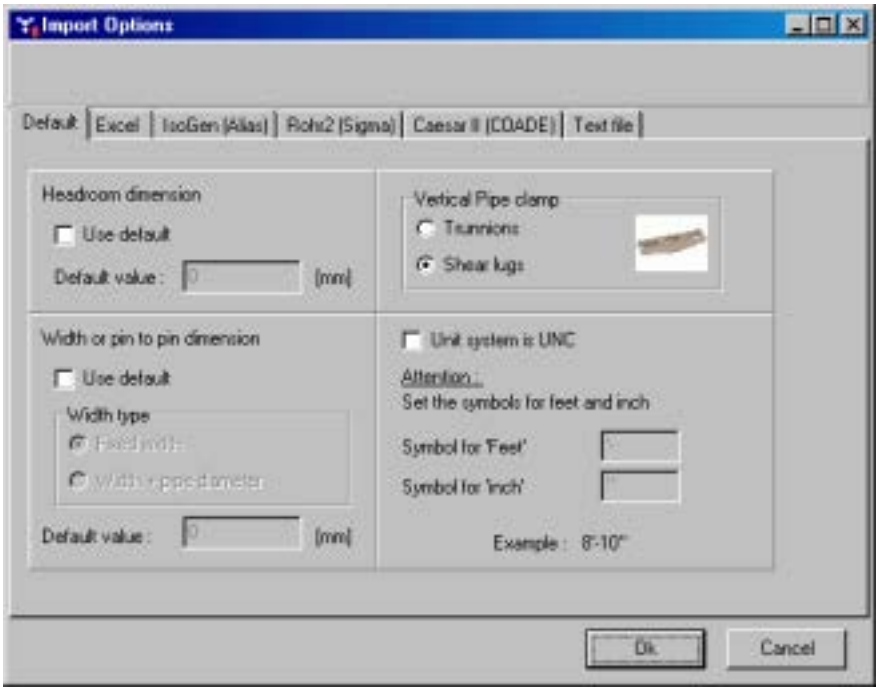

Figure 51: Einstellungsdialog für den Datenimport

For Excel and text files, the setting can be made here as to whether the first line contains the field names. If this option is marked and the first line contains the correct field names, LICAD allocates the field names automatically to the columns. If LICAD comes across an unknown field name it will report this correspondingly.

4.12.5 Reading in UNC units

If you have activated the setting 'Unit system is UNC' in the options, two further input fields appear, with the aid of which the symbols for the foot and inch units can be stipulated. The symbol system, as it is applied in LICAD, is preset.

The import routine can recognize the UNC data in the following formats :

Format	calculated value
<whole number ><symbol for foot units> <real number><inch symbol>	consisting of foot and inch value
<whole number ><symbol for foot units>	consisting only of foot value
<real number><inch symbol>	consisting only of inch value
<real number>	consisting only of inch value

It can be seen from the table above that the import routine can automatically import different formats. Through the possibility of the free definition of the unit symbols it should under normal circumstances always be possible to import UNC units.

4.12.6 Import protocol of data

The import protocol can be accessed manually via the 'Info' button. On the screen, the information to be displayed can be selected. This is made with the buttons 'Display everything', 'Display errors & warnings', 'Display errors only', 'Display only warning' or 'Display correct imports'.

The Excel button serves, as in many other programs, to export the data displayed to Excel.

The ‘Print preview’ button shows the protocol in a print preview, where printouts can as usual be made.

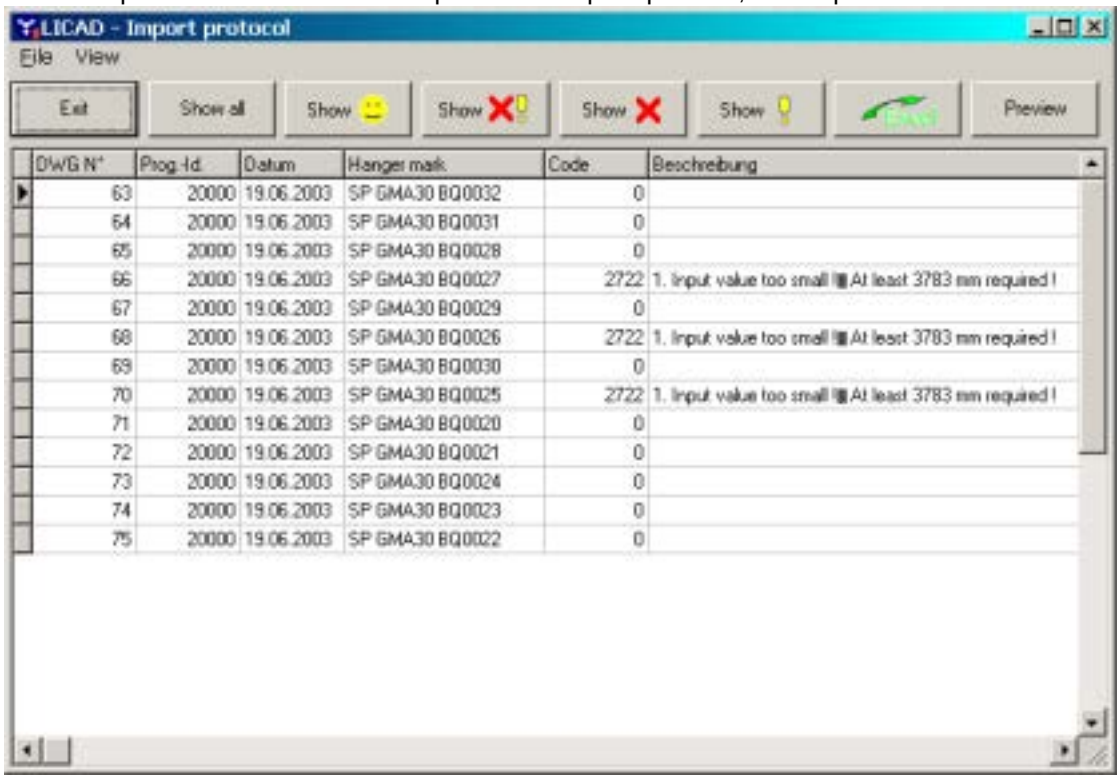

Figure 52: Displaying the import protocol

4.13 Entering input data on supports into a text or EXCEL file

The following program window can be accessed via the button ‘Support data on ASCII.’

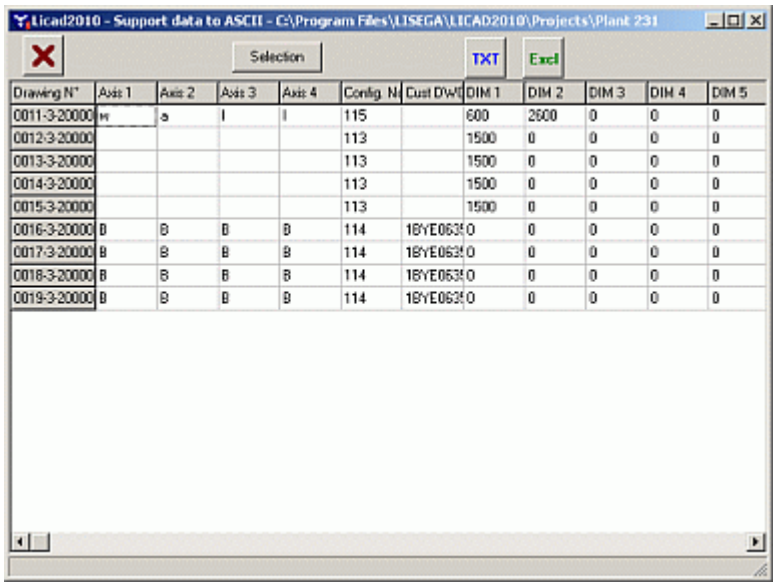

Figure 53 : Exporting configuration data to Excel or a text file

This program point does nothing more than write the data put in by the user into a file. This file can be used among other things to copy LICAD drawings. For this, the program point ‘Import support data’ can be employed. Further, the file can be used to fill existing project tables with relevant information on the supports.

To create a text or EXCEL file a selection must first be made of the LICAD drawings (via the ‘Selection’ button). The corresponding data are displayed in the window. Next, the TXT or EXCL button is selected, then a name assigned to the file in the file dialog.

Note: To use the data for a copy of drawings, the settings for the options should also be secured so that they can be entered again correspondingly later.

4.14 Alteration of project data of existing drawings according to the stacking procedure

The project data (preset in the options) are stored with every drawing. This program item can be accessed for the simultaneous amendment of several drawings. Open the editing menu on the main screen and select ‘Altering project data’. The corresponding screen mask is structured as follows :

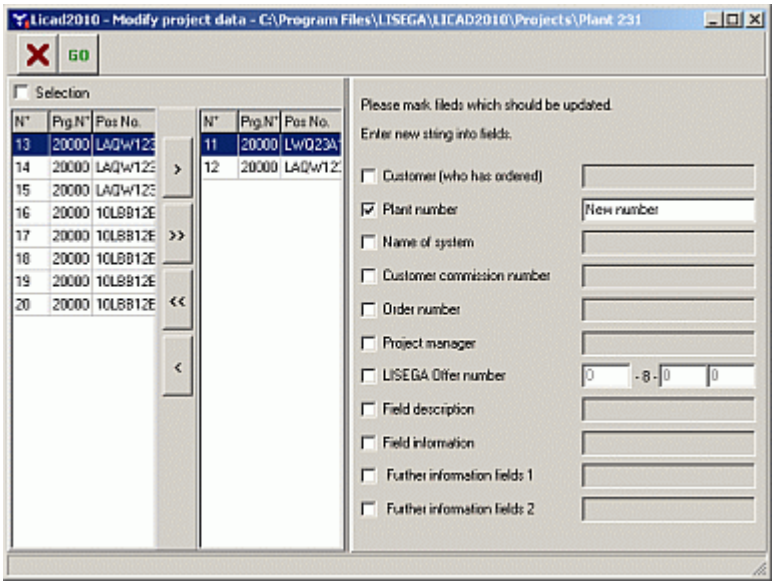

Figure 54: Altering project data in stored drawings

Functioning: Select the drawings to be amended from the left-hand window. Mark the fields to be amended with a new entry and enter the new text into the corresponding field. Only the marked fields are amended. Important: the drawings are irreversibly amended with the new values.

Make a security copy if necessary of the corresponding project. See also Section 4.7 ‘Backup and copy drawings‘.

The entries for individual drawings can, however, also be amended under the item ‘Altering drawings’.

4.15 Deletion of supplementary services

In options, additional services such as preassembly, extra coating of pipe-surrounding components or blocking of spring hangers can be preset. The bills of material are supplemented with the corresponding positions. If for any reason these services are no longer required, the relevant positions can be deleted from the individual drawings at this program item.

Open the ‘Edit’ menu on the main screen and select ‘Delete of additional feats’.

The corresponding screen mask is arranged as follows:

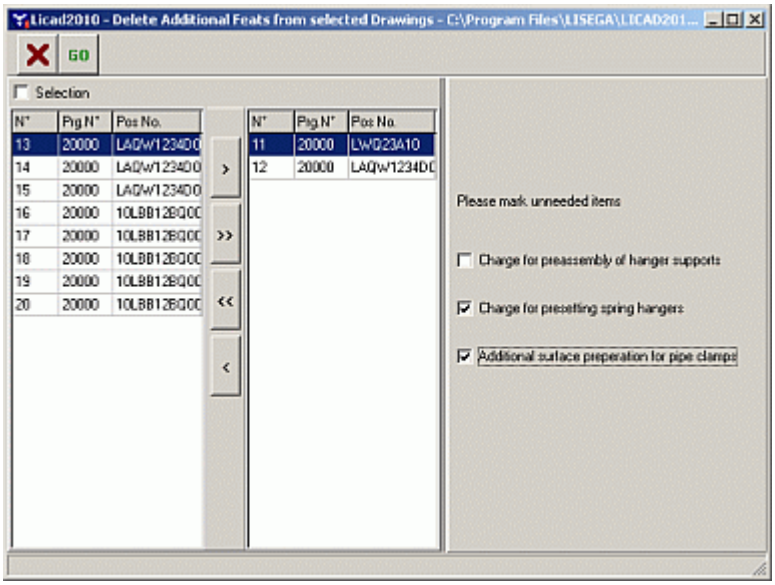

Figure 55: Deleting additional services in stored drawings

Method of function: Select the drawings to be altered from the left-hand windows, then mark the positions to be deleted from the bills of materials.

Important: The positions are deleted irreversibly !

If necessary, make a security copy of the relevant project. See ‘Creating a security copy’ in this respect.

Additional services can also, however, be deleted or newly entered at the item ‘Altering drawings’.

4.16 Add additional feats

As shown before in options, additional services such as preassembly, extra coating of pipe-surrounding components or blocking of spring hangers can be preset. The bills of material are supplemented with the corresponding positions.

If for any reason these services were not set in the options, the relevant positions can be added to every individual drawing at this program item.

Open the ‘Edit’ menu on the main screen and select ‘Add additional feats’.

The corresponding screen mask is arranged as picture 48.

4.17 Cleaning up databases

The data for drawings created in LICAD are saved in several files. The individual sets of data are linked by menu of a key (‘link’). It is quite possible that these links are lost and sets of data are not deleted in some files. This can happen if data is exchanged between different program versions. The result is, when importing drawings an error can occur (‘Cannot save drawings’).

After accessing the menu point, such faulty links are searched for automatically and shown in the window. In this case the clean-up process must be continued!

4.18 View QReport documents

So-called QuickReport files can be opened and viewed via the QReport Editor. These files can be generated under program points 4.3, 5.4, 5.5 and 5.6 (diverse lists).

Note: The QuickReport files cannot be edited.

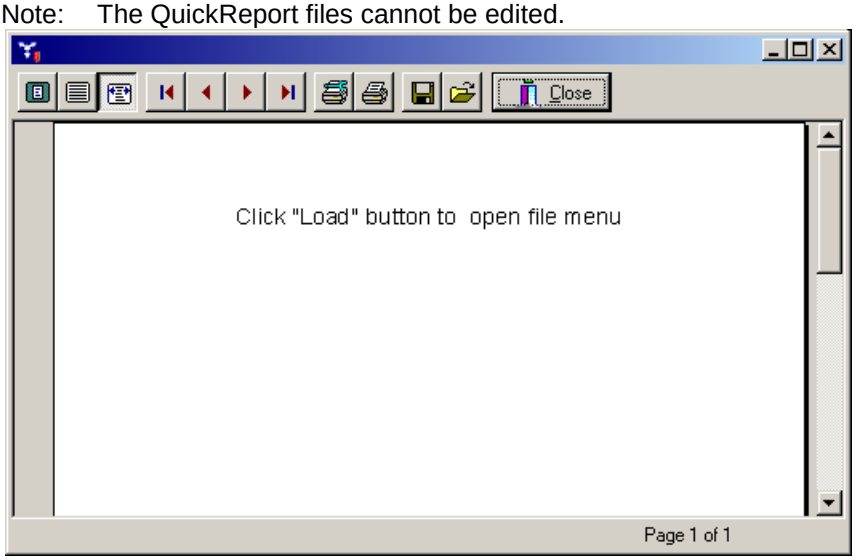

Figure 56: QReport Editor Fenster

5 Directory and lists

5.1 Directory

Both drawings saved on the hard disk as well as those on a diskette can be displayed optionally on the screen or through the printer. The data of the current project path will be displayed.

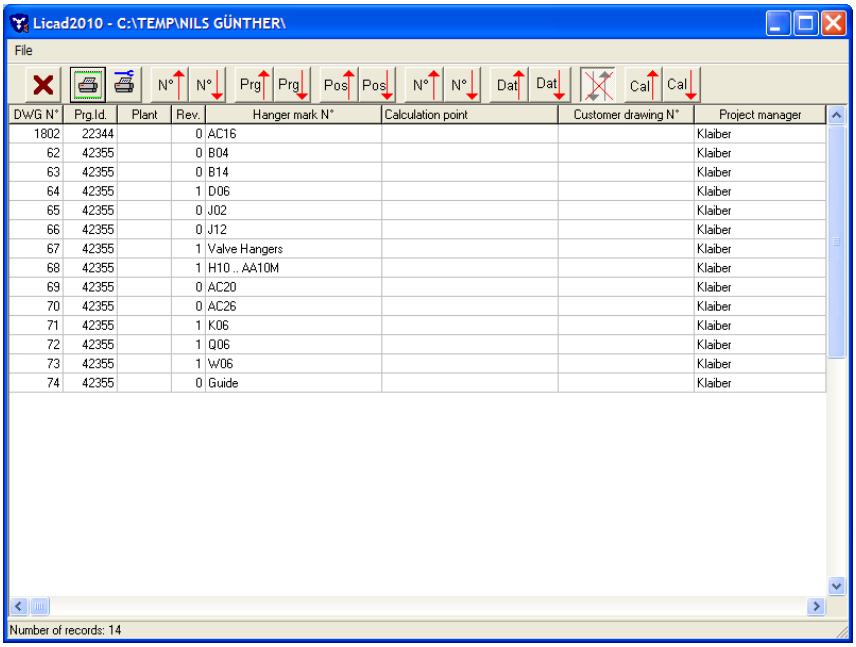

Figure 57: Example of a listing of drawing

In addition to the LICAD drawing number the program shows the drawing's revision number, facility designation, date prepared, sub-item number as well as who prepared it (refer to example in Figure 51). The current working directory is shown in the screen label.

As an option, the list can be displayed clearly sorted according to position numbers, drawing numbers, or date. Clicking once again on the same column heading reverses the sorting sequence (sorted upwards / downwards)

5.2 Printing out drawings

Drawings which have been saved can be printed out either individually or in a so-called batch procedure (Figure 52).

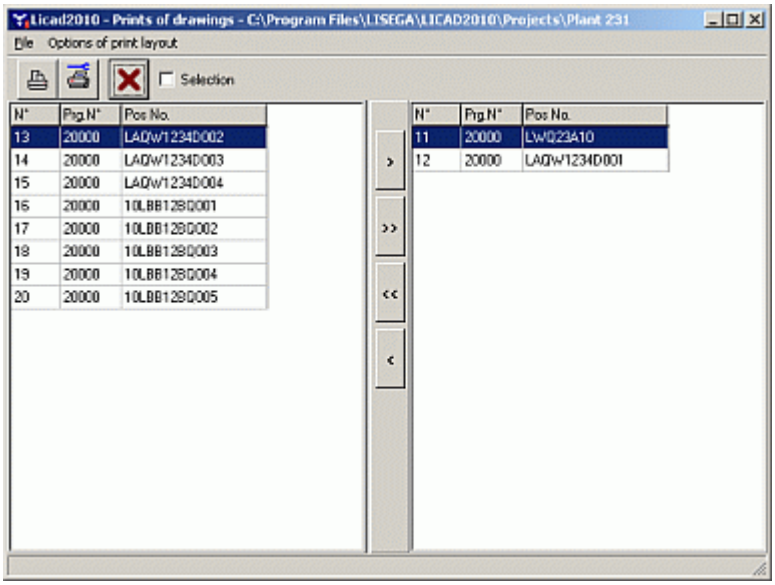

Figure 58: Printing of drawings

Select one or more drawings from the left-hand window (use the ‘Shift’ and/or ‘Ctrl’ buttons for multiple marking) and shift these with the aid of the ‘>>‘ button to the right-hand window.

In the menu print options, different components can be altered for print-out, for example with or without a frame, with or without a site plan. These print options can also be preset under ‘Options - print (Figure 53).

As already mentioned, LICAD also calculates the list prices of the components later. To do this, proceed as described under 2.8.6.

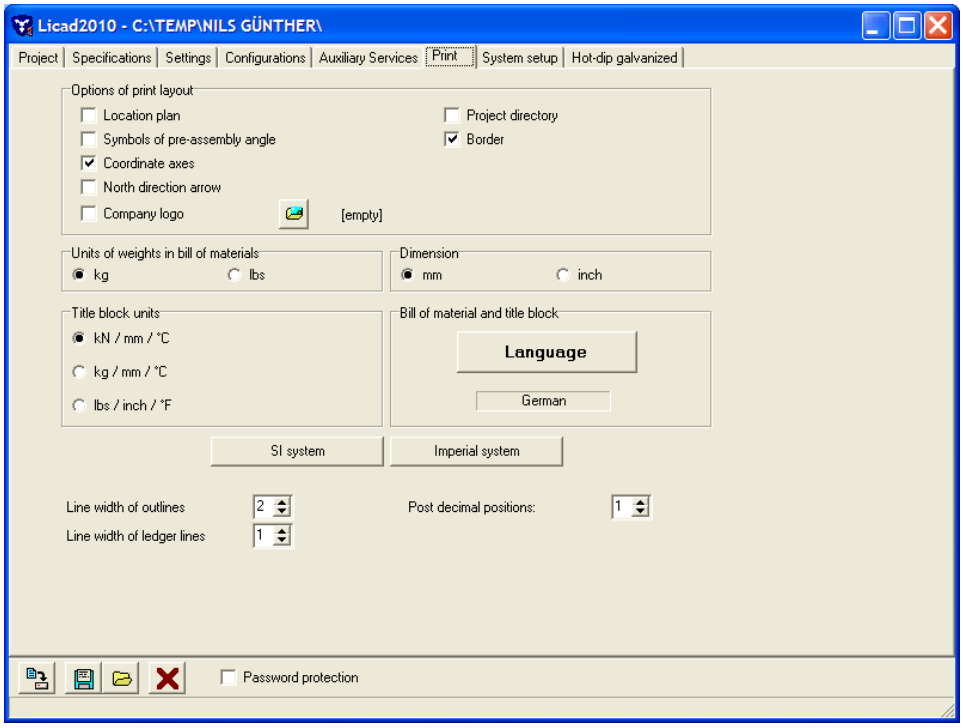

Figure 59: Options for the print-out

In addition, the units for dimensioning, the parts list and the title block data can be set under ‘Options - Print’.

5.3 Printing out individual parts lists

Instead of complete drawings individual parts lists can also be put out by the program. In these lists the article numbers, designations, sizes, weights and materials are listed. In addition, the entry data is put out along with these items.

The entries can be made as described under 5.2. Instead of the materials the list prices can also be calculated and put out by the program (as described under item 2.8.6).

5.4 Printing out complete parts lists

The materials list of all or individual supports can be compiled with this program item to a complete parts list.

The list is issued according to article numbers and contains designations, numbers, weights, prices, as well as total weight and total price.

The entry screen is structured analogously to Figure 54. Selection is also to be made as described under program item 5.2.

The lists can however also be exported to a text file or Excel worksheet file. In this way the parts list information can be further processed in other programs.

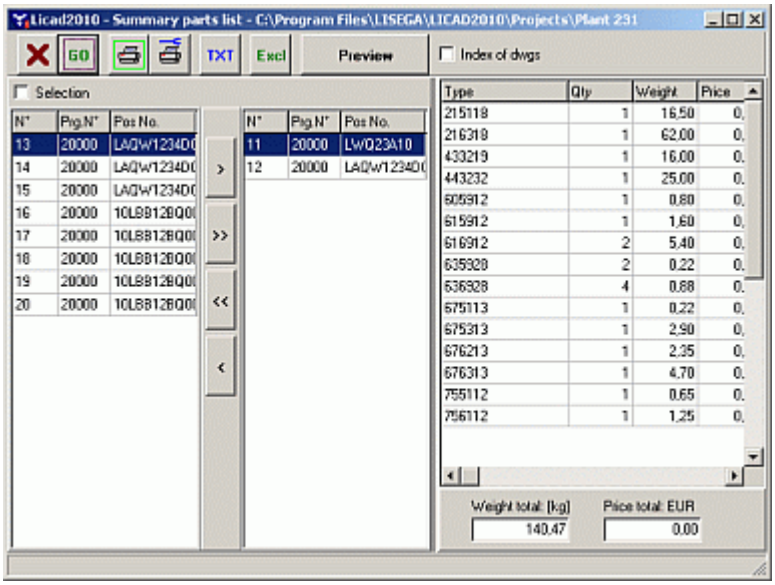

Figure 60: Summary of bills of material

5.4.1 Description of buttons

Press the ‘Go’ button to start the sorting and accumulation for the drawings selected.
The ‘Print’ button serves to print the list directly. The printer can be selected or print settings made with the aid of the ‘Printer setup’ button.

Via the ‘Preview’ button the list is displayed as a print preview and can be seen as a whole; press the button with the printer symbol to start printing.

With the aid of the TXT button the content of the list can be stored in a text file (can be edited with an ASC II editor) for further editing, or the content can be transferred directly to Microsoft Excel via the ‘Excel’ button, whereby Excel is started from LICAD, if necessary.

The list will be sorted according to article numbers and contains designations, number, weights and prices as well as the total weight and total price. A report of the compiled drawings is put out on another sheet.

The input screen is structured analogously to Figure 52. The entries are to be made as described under program item 5.2.

Note: So-called QuickReport files can be opened and viewed via the QReport Editor. These files can be generated under program points xx and yy (diverse lists).

With the aid of the TXT button, the contents of the list in a text file (which can be worked on with an ASCII Editor) can be saved for the purpose of further processing.

Via the ‘EXCL’ button the contents can also be transferred directly to Microsoft Excel, Excel is started from LICAD automatically.

5.5 Printing out lists sorted according to hanger mark no.

With this program, item lists sorted according to hanger marks are produced. Line by line they give the total price and total weight of pipe supports. In addition, the hangers which are included in an item are also indicated. Selection is made as described under Point 5.2. The button functions are described under Point 5.4.1.

The selected drawings of the total list price and total weight of the individual supports are summarized line by line. In addition, the program also lists the supports contained in one position.

Note: So-called QuickReport files can be opened and viewed via the QReport Editor. Refer to chapter 4.17.

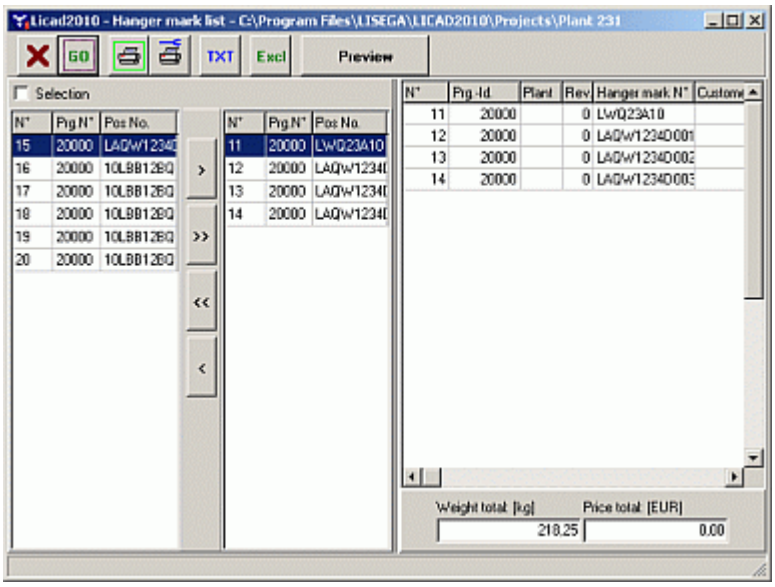

Figure 61: Creating a hanger mark list

5.6 Printing out adjustment lists

The technical information of the hangers are printed out for each support. Information about the total weight and price are included.

The program is called up from the ‘Main screen’ via the button ‘hanger data’.

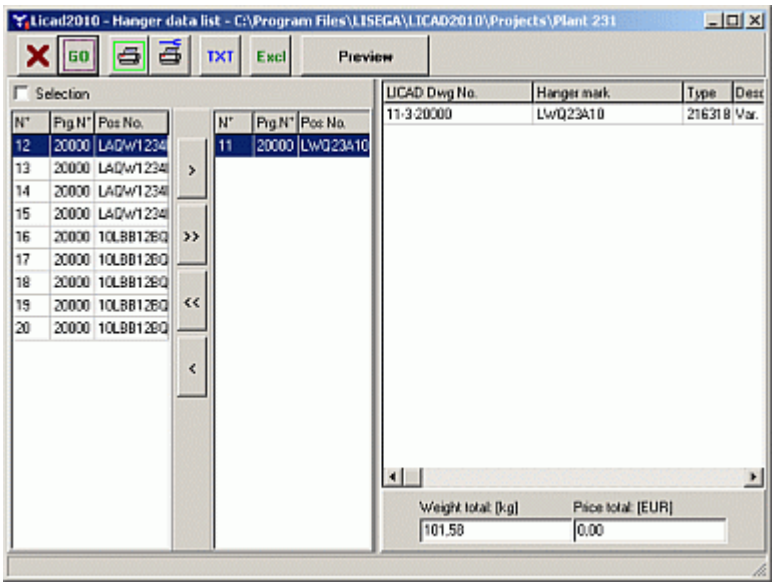

Figure 62: Creating hanger data list

The entries can be made as described under 5.2. A preview will be created via the button ‘Print’ (Figure 56).

Hanger data list

LICAD Dwg No.	Hanger mark	Type	Description	Spring rate	horiz.	lat.	vert.	BLCK	F(H)	F(C)	Qty.	Weight/total
11 -3- 20000	LWQ23A10	216316	Var. spring hanger	133,3	4,0	5,0	33,0	122	25,00	29,73	1	101,58
12 -3- 20000	LAQW1234D001	215118	Var. spring hanger	266,7	0,0	0,0	3,0	27	13,00	14,00	1	38,89
13 -3- 20000	LAQW1234D002	215118	Var. spring hanger	266,7	0,0	0,0	3,0	27	13,00	14,00	1	38,89
14 -3- 20000	LAQW1234D003	215118	Var. spring hanger	266,7	0,0	0,0	3,0	27	13,00	14,00	1	38,89
15 -3- 20000	LAQW1234D004	215118	Var. spring hanger	266,7	0,0	0,0	3,0	27	13,00	14,00	1	38,89
21 -3- 20000		165225	Angulation constant support	0,0	0,0	0,0	46,0	90	12,00	12,00	1	130,50
												387,64

Figure 63: An example for a hanger data list

Only drawing with variable spring hangers or with constant hangers will be taken into account.

Note: So-called QuickReport files can be opened and viewed via the QReport Editor. Refer to chapter 4.17.

6 Additional sub-programs (interfaces)

6.1 ASCII-/DXF interfaces export

With this software interface drawings and parts lists can be transferred to other programs. To this aim, three files are set up and put in the LICAD in any directory. The program is accessed via the DXF button from the main screen.

The selection of drawings proceeds as described under Point 5.2. The selection of the target directory is made from the righthand window. If required, a new directory can be set up here. For this, enter the name of the directory to be created in the lower righthand entry field and click on the button lying to the right or press the Return key after entering the new directory name.

The drawings are exported in the so-called DXF format. Besides the support drawing, the bill of material and other components can be transferred in DXF format (see below).

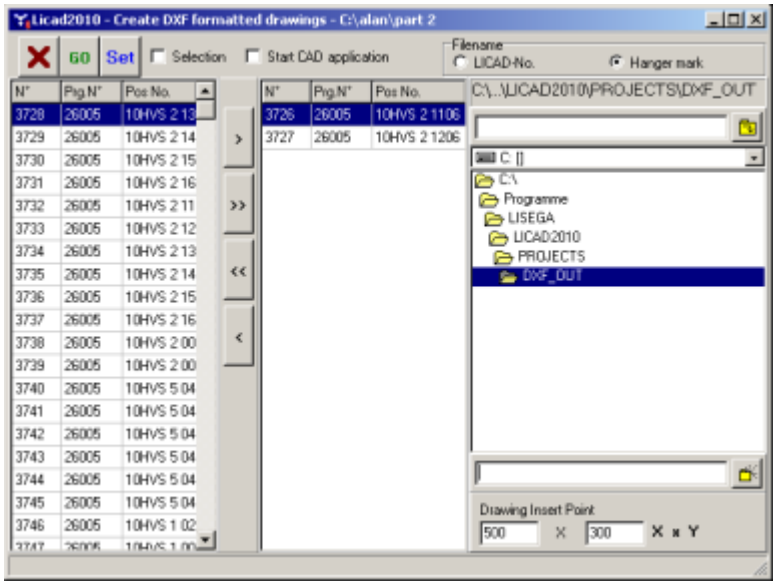

Figure 64: Exporting graphics

The file objects are unscaled, i.e., they are on a scale of 1:1.

Note: The insertion point of the graphic can be altered via the X/Y coordinates.

The file name consists of two parts. The file name can be formed either from the LICAD drawing number or the support number. (The first part is formed of the five-digit counting number of the drawing plus the last three numbers of the
LICAD program number. As a second part, the so-called extension, '.DXF', '.STL' or '.TEC' is added.)
The parts list (ending '.STL') and the technical reference data file (ending '.TEC') are set up in the ASCII format and can be processed with a word-processing editor.

The following files are created for each drawing
- DXF: contains the graphic
- TEC: contains all technical attributes of a drawing
- STL: parts list, without headings
- TXT: as STL, but with headings

Whether an STL or TXT file is created depends on settings for DXF export.

Before the DXF file is set up, the values for the *Layer, Color* and *Text Height* can be set in the 'DXF.CFG' file.
In the options box a number of components can be activated that are transferred to the CAD system as graphic elements with the DXF file. If the 'Use options' box is set, the bill of material is also transferred in

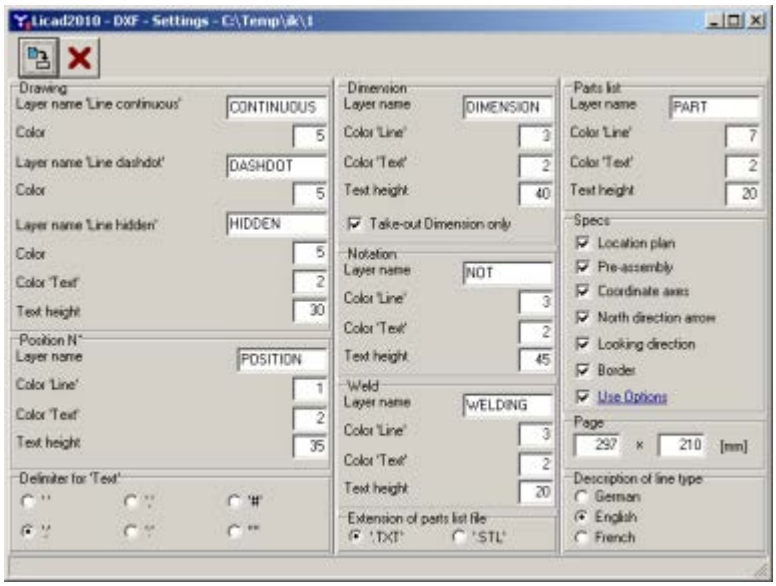

*Figure 65: Settings for the **DXF-Export***

any case.

All inputs must be set for the DXF transfer ! If inputs are missing, the program will notify the user accordingly.

Note: Via the switch 'Only total installation height' it can be decided whether the dimensioning of the support is to be provided with or without the individual components.

A further option for DXF export is 'Start CAD application'. By setting this, the CAD program known on the computer is automatically started (at present only in combination with MicroStation).

Important: The option „Start CAD application" is visible only if in computer Registry the binary value entry (HKEY_CURRENT_USER\SOFTWARE\LISEGA\LICAD_9_0) 'DXF_Stapp exits'. The user itself take care for it. That type of interface and the used DLL's for it will be not supported from LISEGA anymore.

When the CAD program starts, the LISEGAA3.DGN file is automatically downloaded from the LICAD directory; the supports can be placed there. Import control of DXF files is regulated via the DWGIN.SFI file (SFI ending for MicroStation).
Basic parameters on the CAD system must first be fed into the LISEGA.INI file.

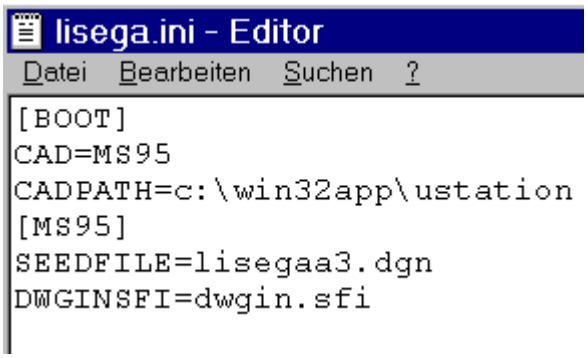

Figure 66: The file LISEGA.INI in an editor window

6.2 3D-representation of supports in MicroStation

In cooperation with the company Intergraph (Deutschland) GmbH a possibility has been created to represent three-dimensionally supports produced by LICAD in the CAD system MicroStation.

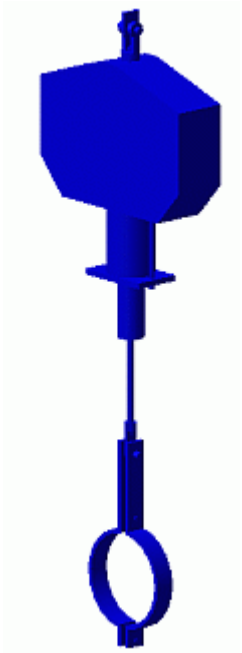

Figure 67: Example of a support in PDS

For this, the IL 3 module is to be additionally installed. This is located on the LICAD CD under the directory number PDS/VERS2010 or can be directly downloaded from the LISEGA website.

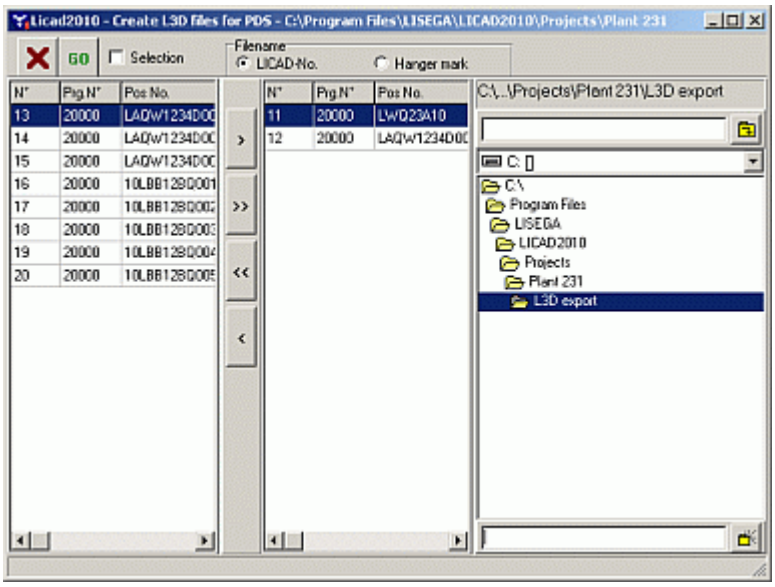

Figure 68: Create L3D files

The files PDS/VERS2010/IL3V2010D.MA or PDS/VERS2010/IL3V2010E.MA are the module in German or English.

One of these files is to be copied into the directory USTATION/MDLAPPS (or both). Please take further information from the information file IL3_E.DOC.

The transfer of information from LICAD to MicroStation is made via so-called L3D files. The program item relating to the creation of L3D files can be found in the file menu on the main screen. The procedure is the same as under 5.2. Press the 'Go' button to create L3D files.

Note: The transfer files can also be generated directly after creation in the design result window (Point xx) by accessing the file menu.

The 'MDL Applications' window in MicroStation is to be opened. (Load the IL3 module IL3V2010D or IL3V2010E.)

In the window then appearing (see Figure 63) press the button 'Import LICAD supports'.

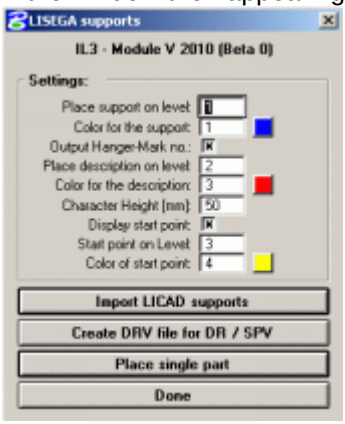

Figure 69: Main mask of the IL 3 module

In the Dialog window that appears you can select a number of drawings and then import them together. Please pay attention that the drawings to be imported are present in the lower list 'Selected drawings'. If necessary, switch to the directory with the L3D files created under LICAD beforehand. To transfer the desired drawings to the lower list, select the corresponding L3D file from the upper left-hand list and press the 'Add' button at the bottom right or make a double click on the L3D file in the upper list.

The import starts when you press the 'Done' button.

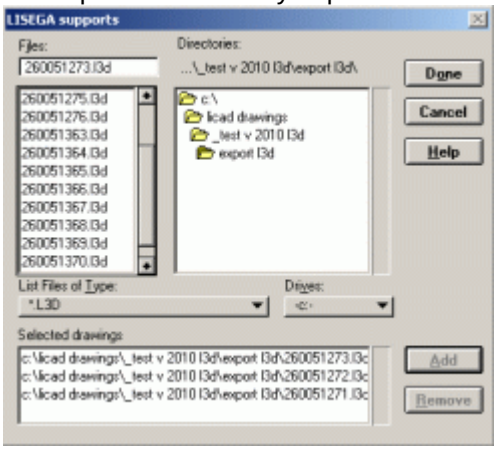

Figure 70: IL3 module file selection window

A listing of an L3D file is shown in the appendix (see section 7.10).

6.2.1 Connection to Intergraph Design or Smart Plant Review

With the aid of the button 'Create DRV file for DR / SPV' in the IL3 module, a DRV file is generated. In this way it is possible to select a support in the Design or Smart Plant Review programs and view the relevant support data.

In this way the relevant information from the maker can be displayed in the Design Review and SmartPlant Review programs together with the selected supports.

Note : A support is put together as a cell. Additional attributes are allocated to this cell which then make the creation of a DRV file possible. If the cell is dismantled, the attributes are deleted. No information is therefore available for the support in Design or Smart Plant Review.

6.2.2 Placing a single component

Press the button of the same name in the start mask (see Figure 65) of the IL3 module; you come to the following input screen :

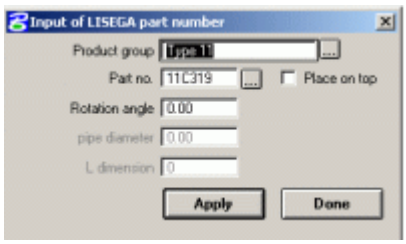

Figure 71: Single component selection in the IL3 module

Here you can select the component to be displayed or enter it directly into the 'Article number' field. The options are opened or closed according to the component.

Note : Components inserted in this way are not considered in the creation of a DRV file.

6.2.3 Settings in the IL3 module

It can be determined on what level the support, the hanger mark number and the starting point (the centre of pipe at the clamp) are to be drawn. The color can also be set separately. For the hanger mark number and the starting point it can also be determined whether they are to be drawn at all.

The settings made are noted by the module in the file ' IL3V2010.CFG'. This file is normally stored in the directory where the module files IL3V2010D.MA or IL3V2010E.MA are located. Via MicroStation you can determine configuration variable 'IL3CFGDIR' or environment variable 'IL3CFGIR' on another directory.

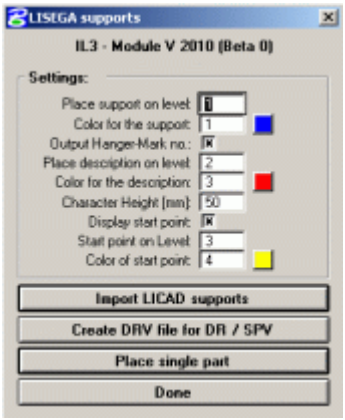

Figure 72: Main mask of the IL 3 module

6.3 3D-representation of supports in PDMS

For the CAD system ‘PDMS’ by AVEVA an interface has been developed which permits the three-dimensional representation of supports.

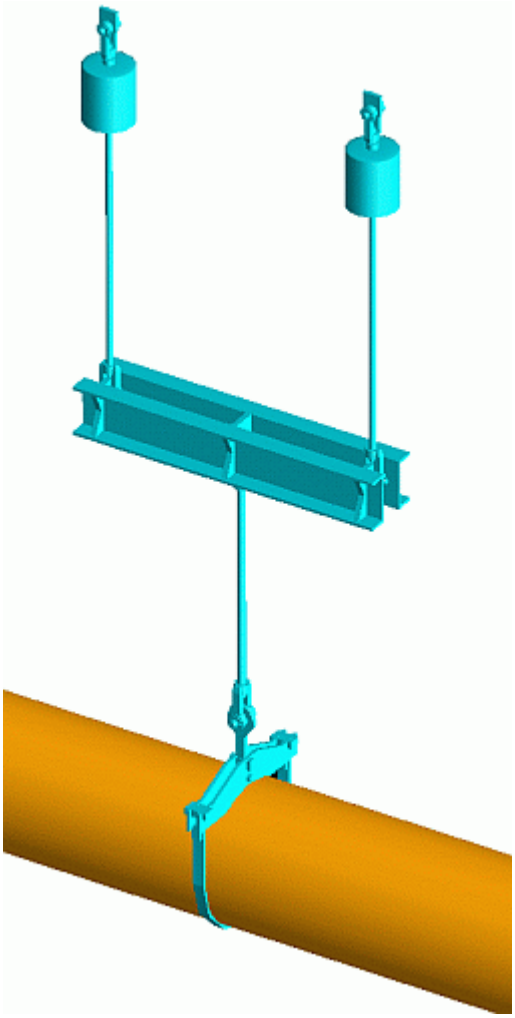

Figure 73: Support example in PDMS

This interface consists of a LISEGA catalog (included in the CD under /PDMS or can be directly downloaded from the LISEGA website) and so-called LOF/PML files which are created by LICAD and must be read into PDMS.

The catalog on the CD has been revised and bears the version 2. The first generation catalog is contained in this, so by updating to Version 2 the information in the old catalog is not lost.

To benefit from the new catalog the option should be set on Version 2. In this case, files are created with the ending LOF (LISEGA output file).

The procedure for installation of the catalog under PDMS can be found in the provided DOC files.

Note: The transfer files can also be generated directly after creation in the design result windows (Point xx) by accessing the file menu.

The creation of PML files is to be carried out analogously to point 6.2 in the manual.

6.4 Interfaces to the SupportModeler™ (Pelican Forge)

A very convenient possibility of planning supports interactively into a 3D model is offered by the LICAD interfaces to the SupportModeler Software from Pelican Forge. The SupportModeler has interfaces to Intergraph PDS as well as Bentley PlantSpace Design Series.

6.4.1 Placing supports via the L3D interface into the SupportModeler.

To place a LISEGA support, a 'Logical Support' must first be generated. The LISEGA library must be downloaded and activated. Open an L3D file from the 'Component|Place LISEGA Assembly...' menu. The L3D files must be generated beforehand via LICAD.

Other descriptions can be found in the help file 'SupportModeler for PDS User Guide.pdf' in the chapter 'Placing LISEGA Assemblies from LICAD'.

6.4.2 Interface LICAD - SupportModeler (External Sizing Program)

Supports can be placed directly into a SupportModeler model via the 'External Sizing Program' interface. For this, the LICAD_SM.EXE program is required in the LICAD directory. Furthermore, ITM files must be additionally installed in the SupportModeler libraries. These tasks are taken over by the setup program located either on the website or on the CD, provided that LICAD as well as SupportModeler are already installed in the computer. A list of the files installed can be found below.

Procedure for generation of LISEGA supports
An existing project is opened in the SupportModeler. The LISEGA catalogs and SM_LISEGA_PRJ library are loaded via the SupportModeler menu 'Component|Add/Remove Vendor Libraries...'. Finally, select the 'sm_lisega_2010' from the Library-Lookup window.

To place a support, a new support point must first be determined via 'New Support' and then a 'Logical Support' generated with the 'Pipe (and Steel)' option (accessible from the SupportModeler menu via the 'Place component' button). Select the entry '8. Run LICAD_SM.EXE' from the 'Category Lookup' window.

Eight different support variations can be selected from the components window:
1_Hanger hori
2_Hanger vert
3_Rigid Rod
4_Pipe Support
5_Rigi Strut
6_Shock Absorber
7_E-Bar
8_Roller_Saddle

The number of entry possibilities varies according to the type selected. The units displayed depend on the key-in units set in the project options.
If you enter the relevant values in the prompts window, this data will be noted by the SupportModeler in a data base. After this, click on the 'place' button. If necessary, select 'Pipe and Steel' from the Auto Placement menu and fix the installation point of the support. The LICAD window then appears. The fields with height notations are already filled and correspond to the beam connection points selected in the model as well as to the pipe midpoint. The data for load, pipe diameter, etc. are also taken over, if required, recalculated in SI or imperial units.The units set in LICAD_SM are independent of the SupportModeler settings. The adjustment possibilities are described further below.

Values such as support numbers, structural attachments, etc., can be supplemented or modified in the various LICAD window panels. Access is also available here to the whole range of LICAD options.

The support selected in LICAD is placed directly in the SupportModeler model on completion of the settings. Possible messages concerning 'incompatible connections' during generation of the drawing should be ignored by the user.

Working with different units
On installation of the LICAD interfaces, the driver files were so devised that when using the SM_LISEGA_US_2010 catalog in LICAD they are preset in imperial units.

Insofar as the SM_LISEGA_2010 catalog with metric threaded components is used, SI units are preset in LICAD. These presettings can be altered by the user in the files PARENT_SM_LISEGA_2010.ITM or PARENT_SM_LISEGA_US_2010.ITM

For this, the so-called OBJ-UNITS must be altered:

```
PROMPTS
-----------------------------------------------------------------------------------------------
'Metric Unit Setting
OBJ_LEN_UNITS,              String   , MILLIMETERS
OBJ_FORCE_UNITS,            String   , KILONEWTONS
OBJ_TEMP_UNITS,             String   , DEG C

'Imperial Unit Setting
OBJ_LEN_UNITS,              String   , INCHES
OBJ_FORCE_UNITS,            String   , POUNDSF
OBJ_TEMP_UNITS,             String   , DEG F
```

Note: An apostrophe set at the start of a line makes the program ignore that line.

Files installed:
Important prerequisites for installation are: LICAD 8.2 or higher and the SupportModeler for PDS, Version 7.2 or higher, must already be installed. After successful installation the following subdirectories exist under the installation directory </Programme/SupMod/Lib/>:
.. /SM_LISEGA_2010
.. /SM_LISEGA_US_2010
.. /SM_LISEGA_2010/bmp
.. /SM_LISEGA_US_2010/bmp
.. /SM_LISEGA_PRJ

The 'SM_LISEGA_2010' and 'SM_LISEGA_US_2010' directories contain the LISEGA standard catalog 2010 and LISEGA standard catalog 2010 US. Insofar as these directories were available before installation the latest directories were entered there during installation. We recommend transfer of the files on hand during installation. In addition, the files required for the interface to LICAD (PARENT_SM_LISEGA_2010.ITM, 1_Hanger hori.ITM, 2_Hanger vert.ITM ...) are installed there.

The relevant pictures are placed in ../bmp subdirectories.

Temporary files with the ending 'ITM' are placed in the .. /SM_LISEGA_PRJ. They can be deleted by the user.

The creation of PML files is to be carried out analogously to point 7.10 in the manual.

7 Appendix

7.1 Insertion of one's own company emblem

LICAD requires any files in Bitmap format for the so-called customer logos. These can be created and worked on with, for example, the MicroSoft Paint program.

Users are free to choose the name and size of the file. The size of the graphic should however have a side ratio (breadth to height) of 1 : 4. This can be tested in Paint via the menu Picture - Attribute!

Note: The number of colours should be limited to 16.

To include the logo in LICAD, call up the 'Option - Print' after starting the program (Figure 68). In the field 'printed picture' options, click on the button and look for the corresponding file name of the bitmap in the open dialog. The printing of the logo is activated by setting the switch 'company logo'.

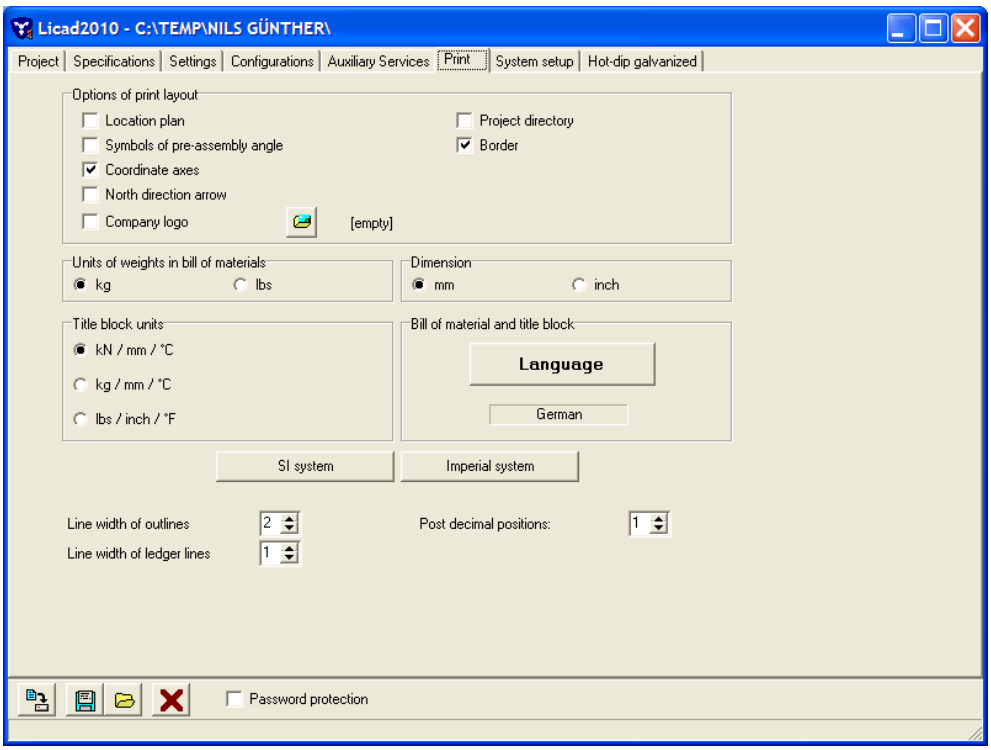

Figure 74: Option – Print – Setting Window

7.2 The supports configurations (symbols)

7.2.1 Configurations in the static field

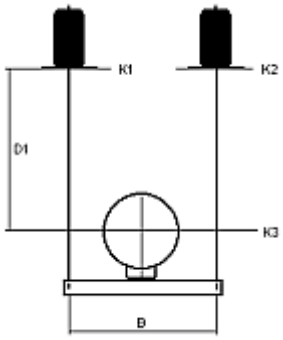

Nr. 01

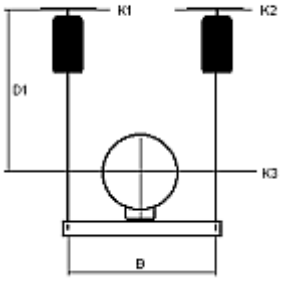

Nr. 02

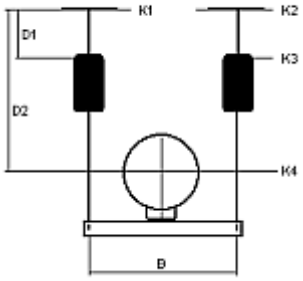

Nr. 03

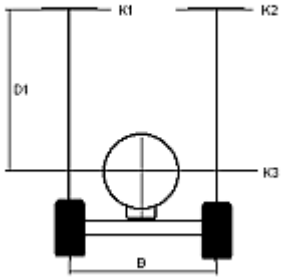

Nr. 04

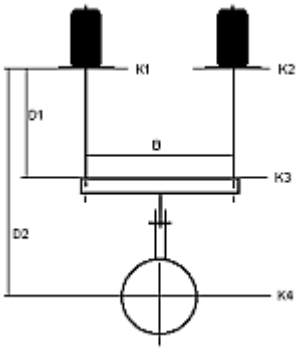

Nr. 05

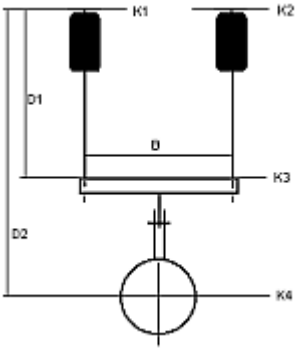

Nr. 06

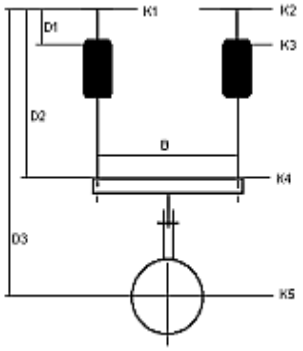

Nr. 07

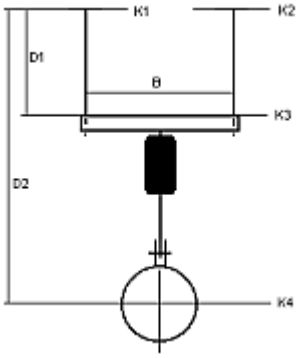

Nr. 08

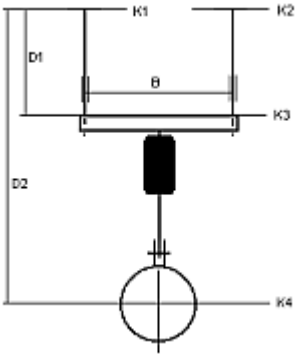

Nr. 09

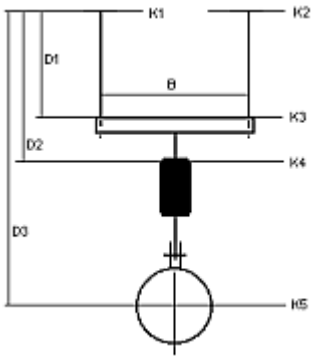

Nr. 10

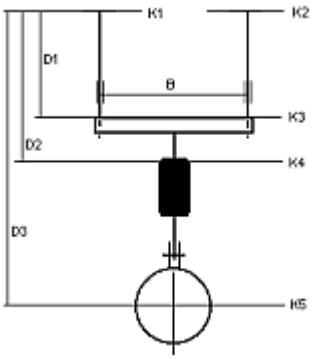

Nr. 11

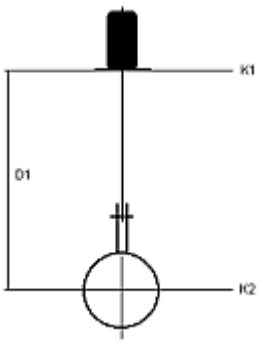

Nr. 12

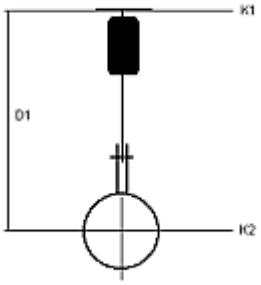

Nr. 13

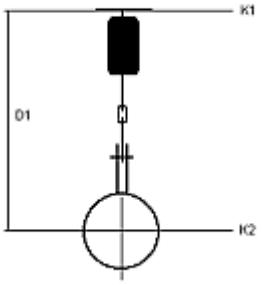

Nr. 14

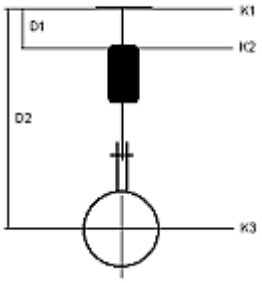

Nr. 15

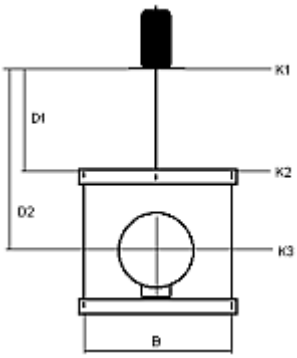

Nr. 16

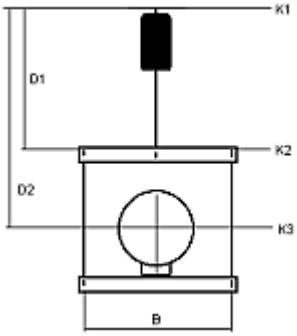

Nr. 17

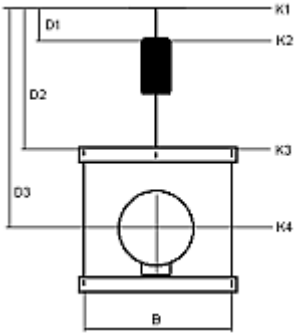

Nr. 18

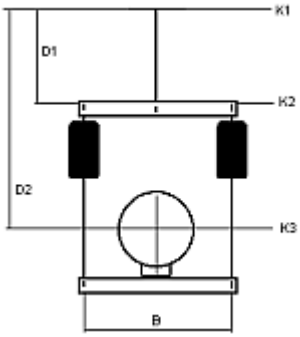

Nr. 19

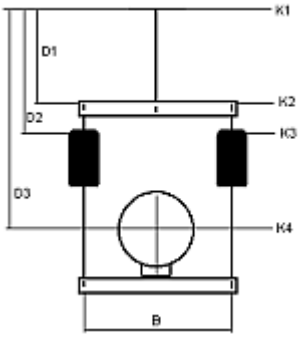

Nr. 20

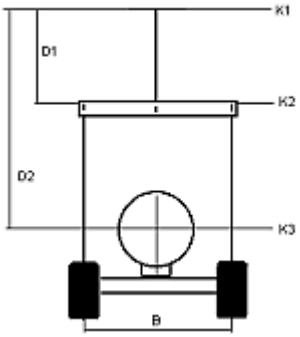

Nr. 21

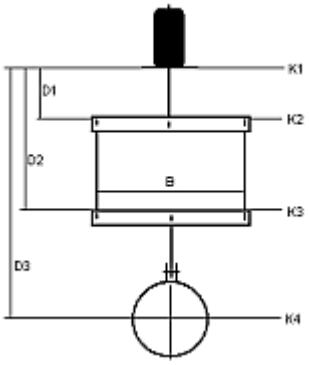

Nr. 22

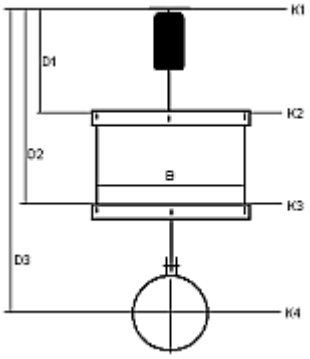

Nr. 23

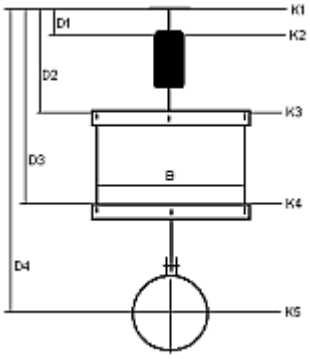

Nr. 24

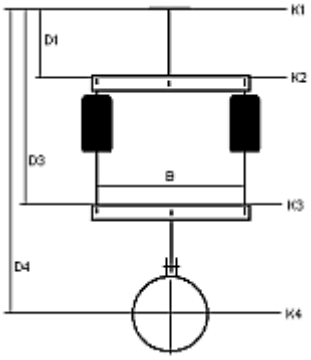

Nr. 25

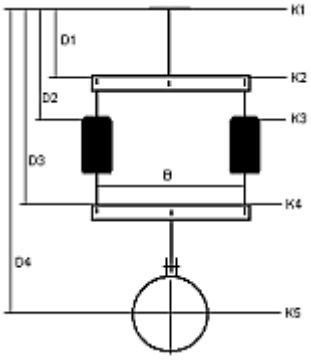

Nr. 26

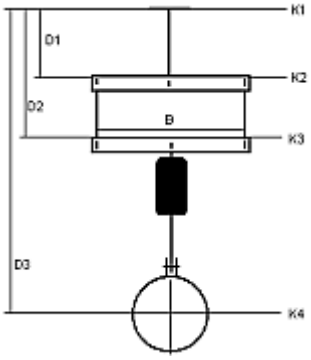

Nr. 27

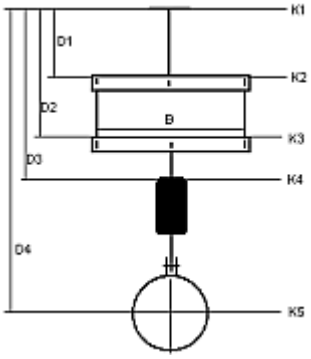

Nr. 28

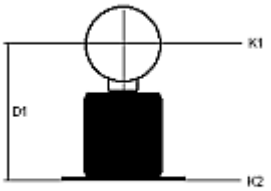

Nr. 29

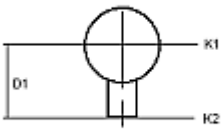

Nr. 30

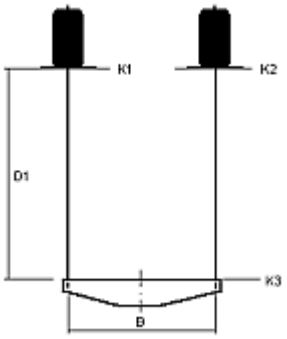

Nr. 31

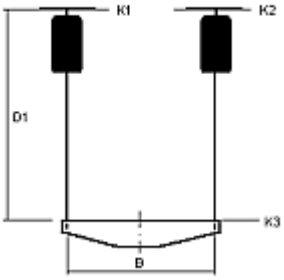

Nr. 32

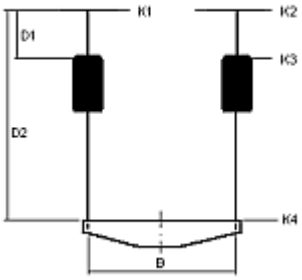

Nr. 33

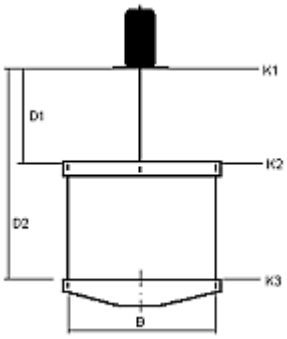

Nr. 34

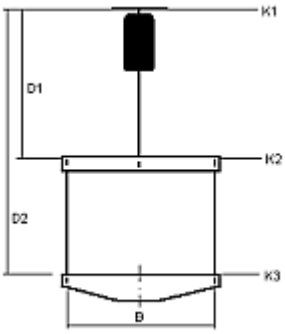

Nr. 35

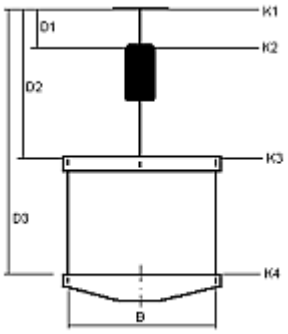

Nr. 36

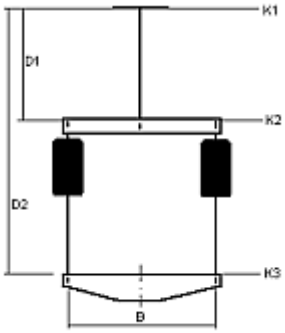

Nr. 37

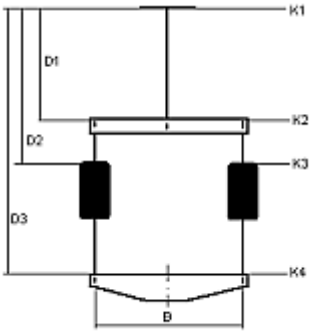

Nr. 38

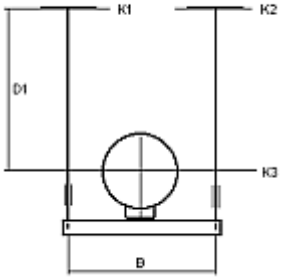

Nr. 39

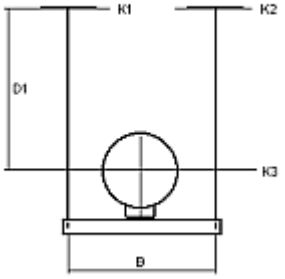

Nr. 40

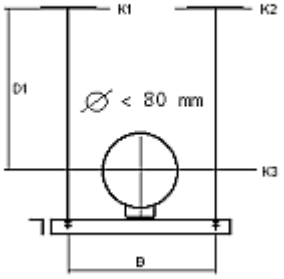

Nr. 41

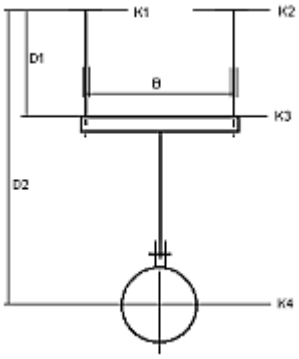

Nr. 42

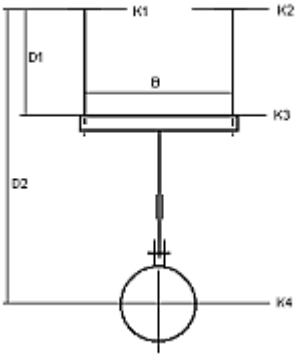

Nr. 43

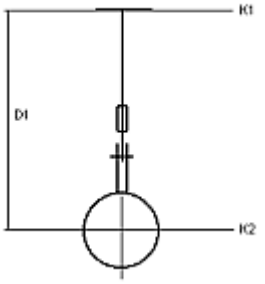

Nr. 44

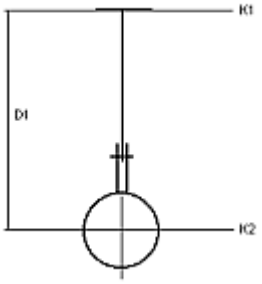

Nr. 45

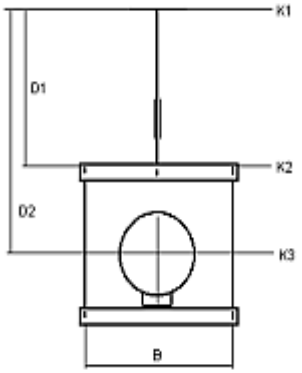

Nr. 46

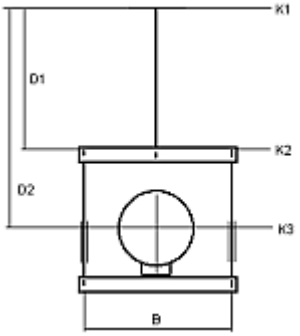

Nr. 47

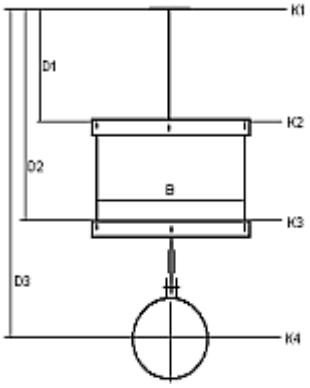

Nr. 48

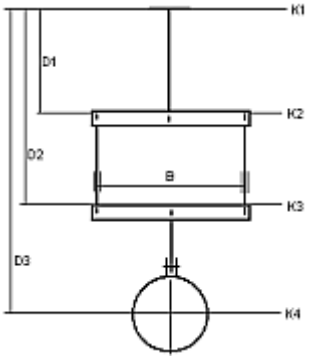

Nr. 49

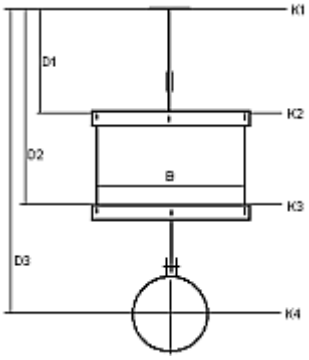

Nr. 50

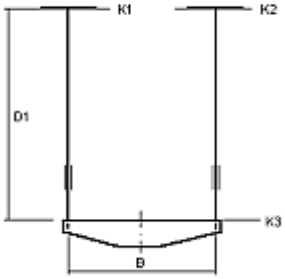

Nr. 51

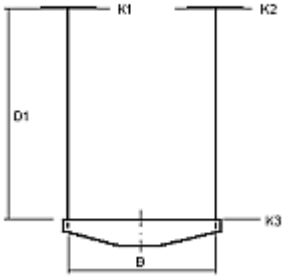

Nr. 52

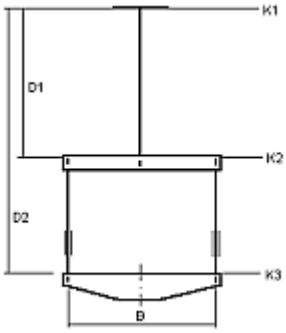

Nr. 53

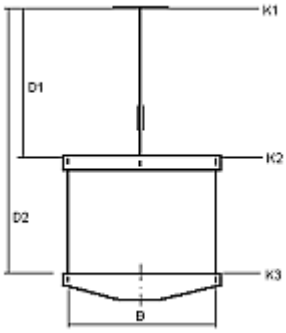

Nr. 54

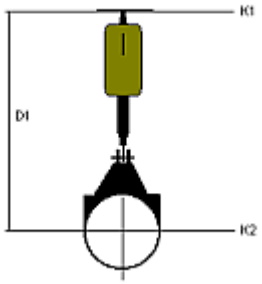

Nr. 55 *2

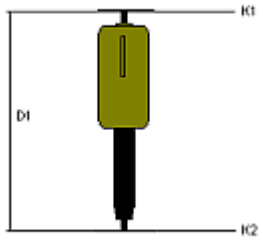

Nr. 56

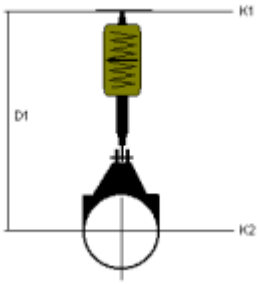

Nr. 57 *2

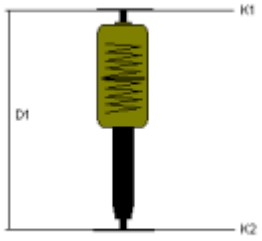

Nr. 58

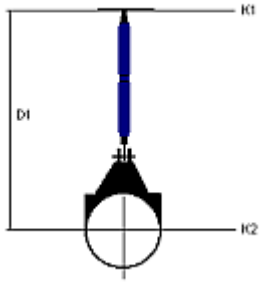

Nr. 59 *2

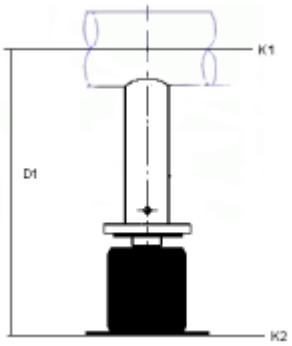

Nr. 60 *3

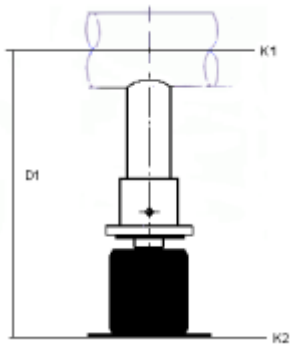

Nr. 61 *3

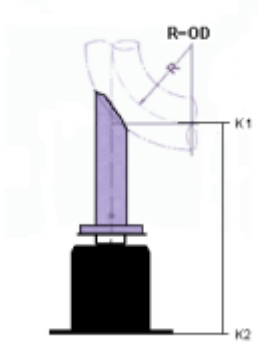

Nr. 62 *3

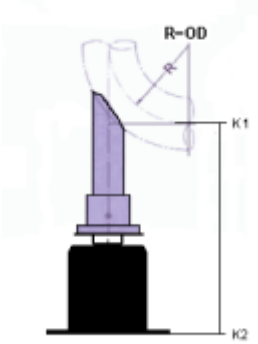

Nr. 63 *3

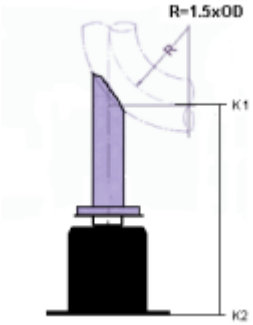

Nr. 64 *3

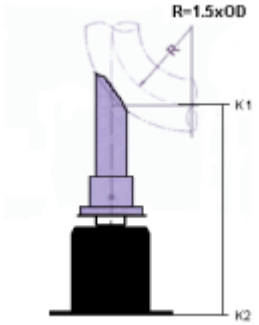

Nr. 65 *3

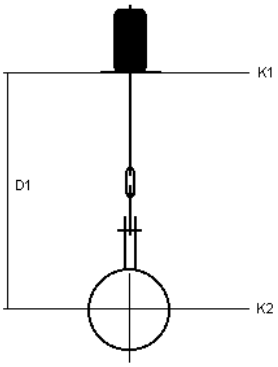

Nr. 66

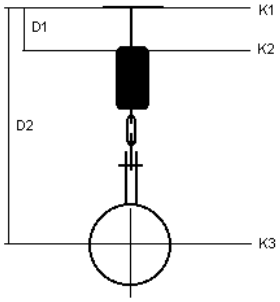

Nr. 67

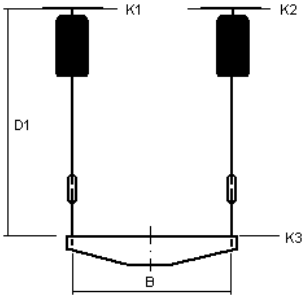

Nr. 68

*1) In addition, for clamp base Type 49, lift-off restraints, lateral guides, or even lateral guides combined with lift-off-restraints can be selected. For lateral guides, the fields for the beam profiles and max. permissible lateral forces, or the lifting forces for lift-off restraints, must be filled out.

*2) Dynamic pipe clamps as hanger clamps: The permissible loads are calculated for dynamic operation. In special cases these dynamic pipe clamps are exposed to permanent static stress. In this case the permissible loads are reduced according to the table section, ‘Error! Reference source could not be found’.

If the dynamic pipe clamps are exclusively subjected to pressure loads, the permissible loads are not reduced.

*3) These configurations are only permissible for vertical travel/loads.

7.2.2 Configurations in the dynamic field

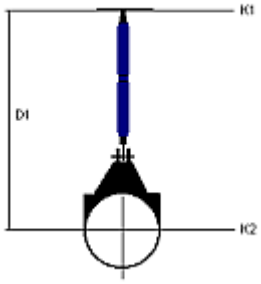

No. 01

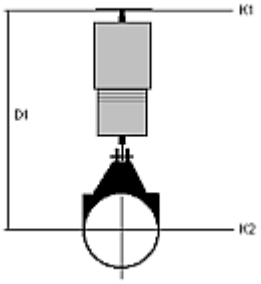

No. 02

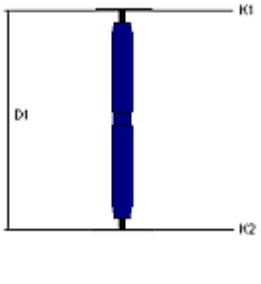

No. 03

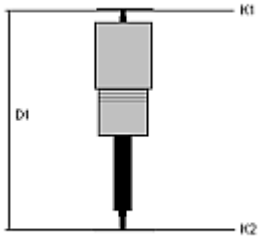

No. 04

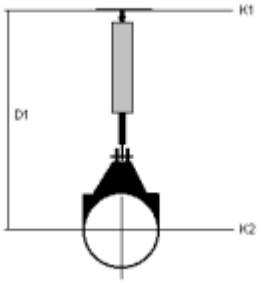

No. 05

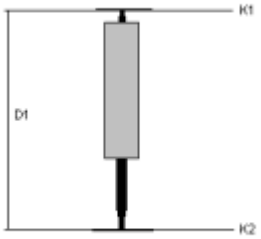

No. 06

7.2.3 Configurations in pipe saddle and pipe bearing fields

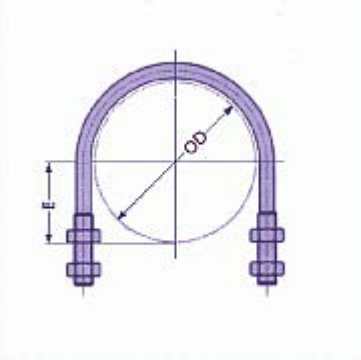

No. 01

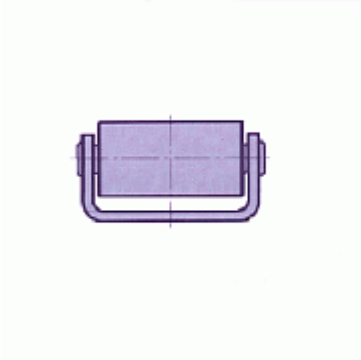

No. 02

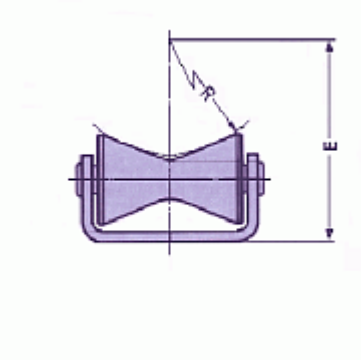

No. 03

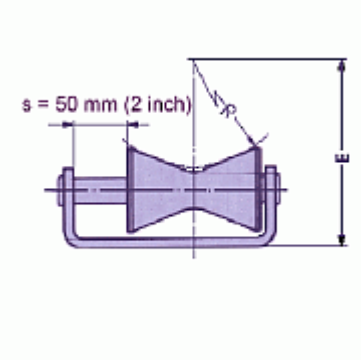

No. 04

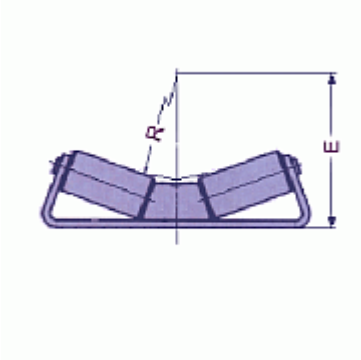

No. 05

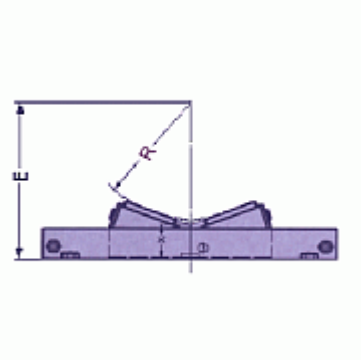

No. 06

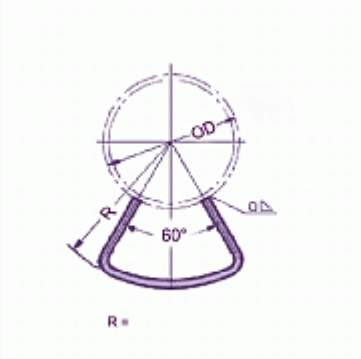

No. 07

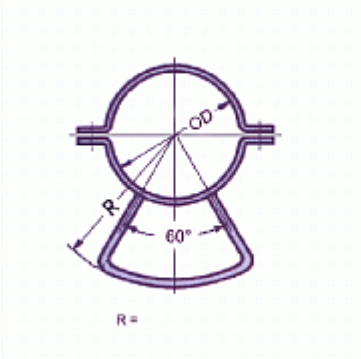

No. 08

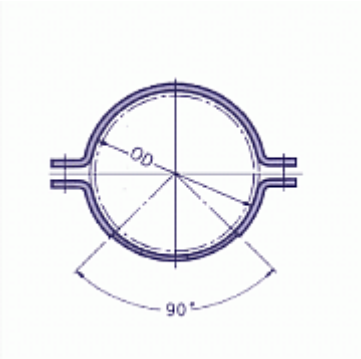

No. 09

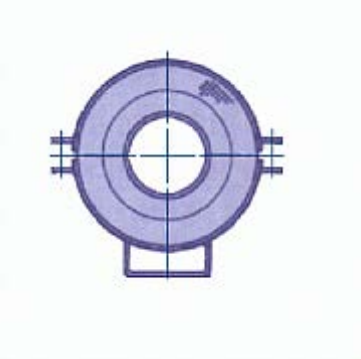

No. 10

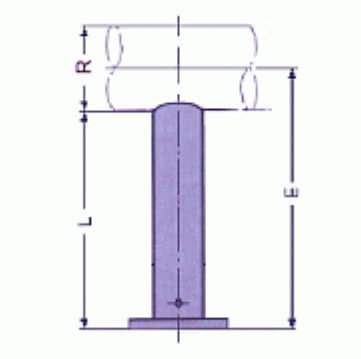

No. 11[4]

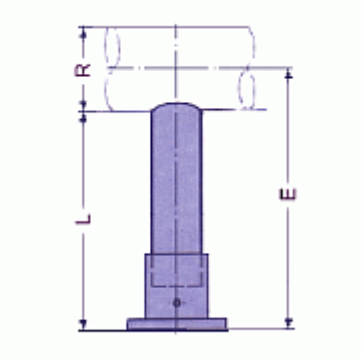

No. 12[4]

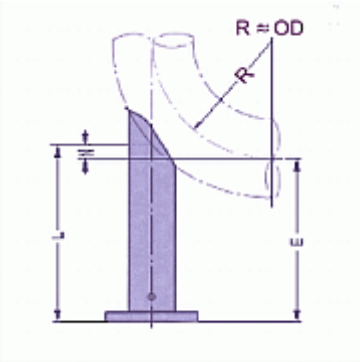

No. 13*4

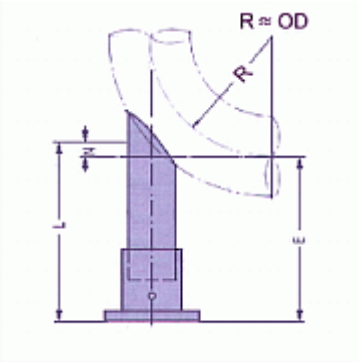

No. 14*4

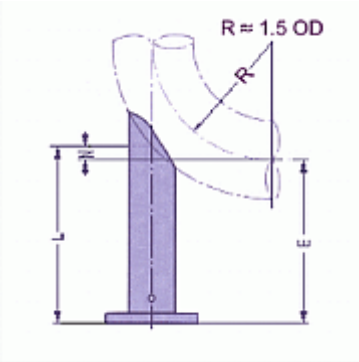

No. 15*4

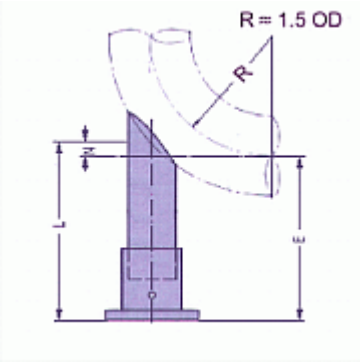

No. 16*4

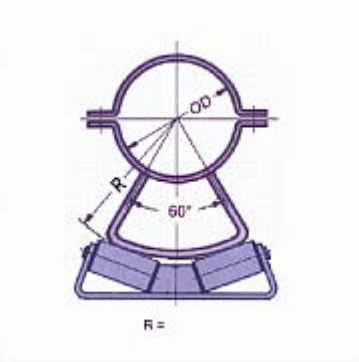

No. 17

*4) For pipe supports Type 58, the type of load must be entered: vertical load only, sliding or fixed anchor.

7.3 LISEGA sectioning of load groups

LISEGA	Normal Operation			Disturbed Condition		Faulted Condition	
LOAD GROUPS	Nominal	H / Normal	Upset	HZ/Emergency		HS / Faulted	
		80°C	150°C	80°C	150°C	80°C	150°C
C	0,31	0,8	0,7	1,1	1,0	1,4	1,3
D	0,62	2,5	2,2	3,3	2,9	4,3	3,8
1	1,25	4,2	3,7	5,6	5,0	7,2	6,4
2	2,5	6,7	6	9	8	13,3	12
3	5	11,3	10,1	15	13,4	22,2	20
4	10	23,3	20,9	31	27,8	41	37
5	20	34	30	46	41	61	55
6	40	56	50	74	66	96	86
7	60	83	74	108	97	140	126
8	80	114	102	150	135	195	175
9	100	151	135	196	176	255	230
10	160	222	199	295	265	381	343
20	200	297	266	395	355	512	461
30	240	340	305	452	406	585	526
40	300	380	340	505	450	650	585
50	400	490	440	650	585	840	755

Table 1: LISEGA Load group sectioning - Static stress

LISEGA-LOADGROUPS	Normal/Upset Level A/B		Emergency Level C		Faulted Level D	
	80°C	150°C	80°C	150°C	80°C	150°C
1	3	2,9	4,0	3,8	5,2	5,0
2	4	3,9	5,3	5,1	6,9	6,7
3	8	7,5	10,6	9,7	13,7	12,6
4	18	16,5	23,9	22,0	31,0	28,5
5	46	44,0	61,0	58,5	77,0	74,5
6	100	94,5	141,0	127,0	180,0	162,0
7	200	175,0	267,0	239,0	336,0	301,0
8	350	339,0	472,0	423,0	655,0	588,0
9	550	535,0	735,0	715,0	935,0	910,0

Table 2: LISEGA Load group sectioning - Dynamic stress

7.4 Dynamic pipe clamps as hanger clamps

Pipe temperature [°C/°F]	Clamp material	Permissible permanent tensile stress [%]
Up to 350/660	S235JRG2/S355J2G3 (Carbon Steel)	100
450/840	16Mo3 (Alloy Steel)	90
500/930	16Mo3 (Alloy Steel)	55
510/950	13CrM04-5 (Alloy Steel)	65
530/985	13CrM04-5 (Alloy Steel)	55
560/1040	13CrM04-5 (Alloy Steel)	45
580/1075	10CrMo9-10 (Alloy Steel)	60
600/1110	10CrMo9-10 (Alloy Steel)	50

Table 1: Reduced permissible loads due to permanent tensile (static) stress

7.5 title block description of a LICAD drawing

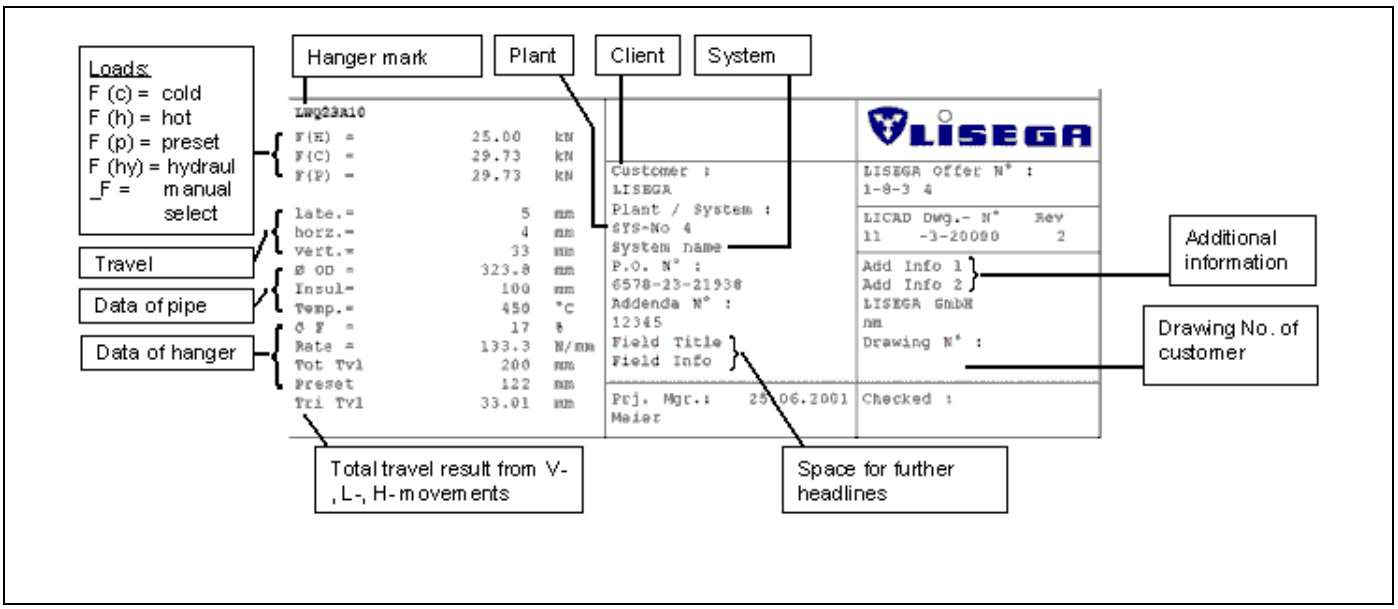

7.6 Installation description of the LISEGA PDMS catalog (Version 2010)

The LISEGA catalog DB with the title LIS060 and the Hanger&Support Dictionary DB with the title LIS058 for the latest PDMS release can be found on the CD in the directory 'LICAD - 3D Interfaces\PDMS'. You can copy these files to your hard drive at installation time. The files will be stored in the subdirectory 'PDMS-interface'. This can be done also with the installation files from the internet.

7.6.1 Initial installation of the LISEGA catalog DB

The following steps are recommended for the installation of the LISEGA catalog DB in a project:

no user may work in the said project

the PDMS module 'ADMIN' is to be called up

a new CATA-DB has to be set up

the file number is to be set up (three- or four-digits)

the file number has to be set at 6993

Suggestion:

Name	LS_CATA
owning team	MASTER
Database Type	Catalogue
Access Mode	Multiwrite, Implicit Claim
DB Number	6993

The catalog DB should be created with these settings. For the MDB's in which they are to be used the value 'current' has to be set.

Via the creation of the new catalog DB in 'ADMIN' a new file is created in the directory (e.g.'xxxooo') in which the project DB's are to be found. It consists of the three-digit project logogram and a consecutive

three- or four-digit number (which if desired can correspond to the directory number allocated). Via these steps the catalog DB is created.

The following should be further carried out so that the current data can be utilised:

- The file LIS060 must be copied into the above mentioned CD index and is to be retitled then so that it assumes the name of the file created in ‘ADMIN’

7.6.2 Initial installation H&S Dictonary DB

The following steps are recommended for the installation of the H&S Dictonary DB in a project:

no user may work in the said project

the PDMS module ‘ADMIN’ is to be called up

a new DICT-DB has to be set up

the file number is to be set up (three- or four-digits)

the file number has to be set at 6994

Suggestion:

Name	H&S_DICT
owning team	MASTER
Database Type	DICTIONARY
Access Mode	Update
DB Number	6994

The dictonary DB should be created with these settings. For the MDB’s in which they are to be used the value ‘current’ has to be set.

Via the creation of the new dictonary DB in ‘ADMIN’ a new file is created in the directory (e.g.’xxxooo’) in which the project DB’s are to be found. It consists of the three-digit project logogram and a consecutive three-or four-digit number (which if desired can correspond to the directory number allocated). Via these steps the dictonary DB is created.

The following should be further carried out so that the current data can be utilised:
The file LIS058 must be copied into the above mentioned CD index and is to be retitled then so that it assumes the name of the file created in ‘ADMIN’.

Note: It is recommended that both DB’s are activated in a catalog project and are made known to the actual projects via external links.

7.6.3 Reading in a new catalog release (catalog upgrade)

- No user may work in the said project
- The file LIS060 must be copied into the DB-index (e.g. ‘xxxooo’ from the CD and then retitled so that it adopts the name of the LISEGA catalog DB’ (as described above).

The catalog upgrade is thereby completed.

Note: The installation description of the LISEGA application can be found on the CD in the index \PDMS **!**

7.6.4 Installation of the LISEGA menu in DESIGN

7.6.4.1 Creation of a user-defined PMLLIB path for DESIGN

(e.g. Standard : D:\CADCENTRE\PDMS11.2\PMLLIB
User defined: D:\PMLLIB\LISEGA\DESIGN)

and copying of the macros:

jslisegalif.pmlfrm
jslisegalof.pmlfrm
jsliseganuts.pmlfrm
lisegadesign.pmlfrm

(Source on LICAD CD : /PDMS/Macros)

7.6.4.2 Notification of the PMLLIB path in the 'evars.bat' file

The PMLLIB search variable is to be extended:

e.g. standard is:

```
if not '%pmllib%'==" goto pmlok
set pmllib=%1\PMLLIB
echo PMLLIB set to %PMLLIB%
:pmlok
```

(%1 stands for the PDMS installation path (e.g. D:\CADCENTRE\PDMS11.2)

Necessary extension :

```
if not '%pmllib%'==" goto pmlok
set pmllib=D:\PMLLIB\LISEGA\DESIGN %1\PMLLIB
echo PMLLIB set to %PMLLIB%
:pmlok
```

7.6.4.3 Access PDMS, start MONITOR module and open Command Line

The LISEGA macros are registered by entering :

PML REHASH ALL

A 'pml.index' file is hereby created in the new PMLLIB path (writing permission is to be respected !)

This procedure is not project related and only needs to be follwed once.

7.6.4.4 The actual accessing of the LISEGA menu

The actual accessing of the LISEGA menu in DESIGN is made on the Command Line by entering :

SHOW !!LISEGADESIGN

(On storage of 'FORMS & DISPLAY', the menu remains active.)

On starting DESIGN via the order 'LOAD FROM MACRO-FILES', the order

SHOW !!LISEGA

is to be entered again.

7.6.4.5 Menu items of the LISEGA menu in DESIGN

7.6.4.5.1 Start output File (LOF)

File browser to start the LOF files created by LICAD.

The LSROD sprefs of the respective HANG elements are set simultaneously and the hex nuts put in place. (LSROD's are subject to graduation in length)

7.6.4.5.2 Create Input File (LIF)

For the calculation or design of a hanger arrangement the corresponding UDA values of the ATTA can be transfered to LICAD. This menu creates a file for this from PDMS that can be imported into LICAD.

Note: Set output path (.LIF): The path for the. LIF file can be defined by the environment variable HANGER.

Example of how HANGER is defined: set HANGER=C:\Data\Lif-Files

If the variable is not defined, the file is written to the starting area, where PDMS was started from, eg into the desktop.

7.6.4.5.3 Resetting rods and nuts

On manualt creation or alteration of a hanger design (e.g. created via a LOF file) it is imperative to carry out this menu procedure !
In this way the correct LSROD sprefs of the individual HANG elements are (newly) set and the hex nuts newly placed according to the modified design.

7.6.4.6 Important notes

Please note:
1.) A pre-condition for the trouble-free functioning of the LISEGA design macros in the menu items of the LISEGA DESIGN menu is that the the hanger supports have been created with the Version 3.0 of the LISEGA catalog (as of 23. April 2000), and that LICAD Version 8.0 is used to create the LOF files.

2.) The dictionary database /MASTER/H&S_DICT (dbfile: lis058, dbnumber: 6994) must be set as 'CURRENT DB' in the MDB selected. This database contains all the UDA's (User Defined Attributes) for the data exchange LICAD and PDMS !

It is to be carried out once in the LEXICON module of the compile procedure via the 'COMPILE' command.

7.7 Installation of the LISEGA catalog in MicroStation (Version 2010)

The following directory can be found on the CD ‘LICAD - 3D Interfaces\ PDS_MicroStation\’ including the files

IL3V2010D.MA,
IL3V2010E.MA,
INSTALL_GERMAN.txt und
INSTALL_ENGLISH.txt.

You can copy these files to your hard drive at installation time. The files will be stored in the subdirectory ‘PDS-interface’.

Note: This can be done also with the installation files from the internet.

7.7.1 Installation and run application

The following steps are recommended for installation:

Either the application program
IL3V2010D.MA (german language) or
IL3V2010E.MA (english language) should be copied into the directory **...\ustation\mdlapps**
of the current used MicroStation version.

The installation of the LISEGA catalog is thereby completed.

3D placement is started with the command within MicroStation:
‘**MDL Load IL3V2010D’ (German) or**
‘MDL Load IL3V2010E’ (English).

In the selection menu, a L3D file previously generated from LICAD must then be selected.

7.8 Example of a LIF-file (LISEGA Input File)

```
[DWG]
HangerMark=My_hanger_mark_nr
DwgNo=

[StaticLoad]
Load=25.0
Hydro=30.1

[DynamicLoad]
Load(H)=
Load(HZ)=
Load(HS)=

[PIPE]
Size=323.5
Temp=500
Insulation=120
Pipe_Z=12500
Pipe_X=12500
Pipe_Y=12500
Orientation_X=0
Orientation_Y=0
Orientation_Z=1

[StaticMovements]
Lateral=1
Horizontal=0
Vertical=25

[DynamicMovements]
Positive=
Negative=

[SteelConnection]
El_Steel_L=15200
El_Steel_R=15000
Width=900
```

7.9 Example of a LOF-file (LISEGA Output File)

```
--    000 Begin LICAD-Data
--    001 File : /BQA001.LOF
--    002 LICAD-LICAD Dwg No. : /1832-3-22344
--    003 Hanger mark N° : /BQA001
--    004 Customer dwg No. : /
--    005 Calculation point : /
--    105 Cold load [kN]= 15.21
--    106 Hot load [kN]= 13.88
--    107 Spring rate [N/mm]= 266.7
--    108 Travel - X - Direction [mm]= 0.0
--    109 Travel - Y - Direction [mm]= 0.0
--    110 Travel - Z - Direction [mm]= 5.0
--    111 Offset - X - Direction [mm]= 0.0
--    112 Offset - Y - Direction [mm]= 0.0
--    120 Pipe diameter [mm]= 323.9
--    121 Insulation [mm]= 0
--    122 Temperature [°C]= 0
--    123 Force deviation [%]= 10
--    124 Preset position [mm]= 32
--    301 Alpha = 0.00 Delta l SLCA = 0.00 Delta l SCLP = 0.00
--    400 No Type    Description      Qty    Weight  Material
--    401                                    [kg]
--    410 01 755112        Weld-on eye plate    01     0.65 S235JRG2
--    410 02 615912        Clevis with pin      01     1.60 P250GH
--    410 03 675113        Threaded stud        01     0.22 S355JO
--    410 04 215118        Var. spring hanger   01    16.50
--    410 05 605912        Eye nut              01     0.80 P250GH
--    410 06 433219        Three bolt clamp     01    16.00 S235
--    410 07 635928        Hexagonal nut        02     0.22 Gr. 8
--    410 08 675413        Threaded rod         01     4.35 S355JO
--    410 09 919201        Preset cost          01     0.00
--    998 (PDMS) Version: 9.1.3  -  2012/02/16
--    999 End LICAD-Data
--
FOR

NEW RESTR /BQA001/RE
  HSPE SPEC /LISEGA3.0

  Function 'EUR'

  Purpose    N

  :USTDYNLOADS 0 0 0
  :USTFORCES 0 0  15.00
  :USTTESTLOAD   0.00
  :USTMOVEMENT      0      0      5 0 0
--:USTMOVEMENT horz late vert
  :USTSTEELELEV 0
  :USTDISTROD      0
  :USTMAXTRAVEL     50
  :USTSTATLOAD  15.21
  :USTBLOCKPOS     32
  :USTWELDVALUE 7
  :USTSRATE 266.67
```

```
NEW HANG
   HSPE SPEC /LISEGA3.0
   HSRO SPCO /LISEGA3.0/M24
   POS HH AT /BQA001
   HCON TUB
   HBOR  300

  NEW PCLA
   SPRE SPCO /LISEGA3.0/433219
   LSRO SPCO /LISEGA3.0/M24
   DESP  24 24 0 323.9
   CONN
   VAR !OR dir X

  NEW HELE
   SPRE SPCO /LISEGA3.0/605912
   LSRO SPCO /LISEGA3.0/675413
   DESP  24
   CONN
   ORI AND PL IS U

  NEW HELE
   SPRE SPCO /LISEGA3.0/215118
   LSRO SPCO /LISEGA3.0/M24
   DESP  24 0 32
   CONN
   ORI AND Y IS $!OR
   BY u 1113mm

  NEW HELE
   SPRE SPCO /LISEGA3.0/675113
   LSRO SPCO /LISEGA3.0/M24
   DESP  24
   CONN

  NEW HELE
   SPRE SPCO /LISEGA3.0/615912
   LSRO SPCO /LISEGA3.0/M24
   DESP  24
   CONN
   ORI AND Y IS $!OR

  NEW SCLA
   SPRE SPCO /LISEGA3.0/755112
   LSRO SPCO /LISEGA3.0/M24
   DESP  24
   CONN

   OWN
   CONN PT TO LAST MEM


   REST
   !Atta     = /BQA001
   !Plane    = object PLANE(!Atta.Position, Z IS U WRT /* )
   !AttaADir = !Atta.ADir.Projected(!Plane)
   !Rest     = /BQA001/RE
   !HangDir  = !Rest.Member[1].Member[1].ADir.Projected(!Plane)
   !Angle    = !AttaADir.Angle(!HangDir)
   !CrossDir = !AttaADir.Cross(!HangDir)
   handle any
     return
   endhandle
   if (!CrossDir eq U) then
      ROT ABO Z BY -$!Angle THRO /BQA001
   else
      ROT ABO Z BY $!Angle THRO /BQA001
   endif
END

$.
```

7.10 Example of a L3D-file for PDS

```
$*    000 Start INFO-L3D-data
$*    001 File                    : /Valve Hangers.L3D
$*    002 LICAD-Drawing-No.       : /67-3-42355
$*    003 Hanger mark No          : /Valve Hangers
$*    004 Customer-Drawing-No.    : /
$*    005 Calculation point       : /
$*    105 F(Cold) [kN]            :  1.11
$*    106 F(Hot) [kN]             :  0.00
$*    107 Springrate [N/mm]       :  0.0
$*    108 Travel-X-Direction [mm]  :  0.0
$*    109 Travel-Y-Direction [mm]  :  0.0
$*    110 Travel-Z-Direction [mm]  :  50.0
$*    111 Preset position [mm]     :  70
$*    112 Pipe diameter [mm]       :  120.00
$*    113 Insulation [mm]          :  0
$*    114 Temperature [°C]         :  670
$*    115 Total travel [mm]        :  50.00
$*    116 Force deviation [%]      :  0
$*    117 Preset position [mm]     :  70
$*
$*    400 No Type         Description         Dimension           Qty  Weight Material
$*    401                                     [kg]
$*    410 01|782111-HD    |Beam clamp         |HE140A             |01|    1.25|
$*    410 02|612912-HD    |Clevis with pin    |                   |01|    0.20|P250GH
$*    410 03|672113-HD    |Threaded stud      |35                 |01|    0.03|S235JRG2
$*    410 04|111215       |Constant hanger    |                   |01|   15.00|
$*    410 05|602912-HD    |Eye nut            |                   |01|    0.10|P250GH
$*    410 06|43-521978    |Three bolt clamp   |D120.0             |01|    2.30|16Mo3
$*    410 07|632928-HD    |Hexagonal nut      |M12                |02|    0.04|Gr. 8
$*    410 08|672313-HD    |Threaded rod       |(885)              |01|    0.70|S235JRG2
$*    410 09|941100       |Preassembly        |                   |01|    0.00|
$*    410 10|934000       |Additional paint   |                   |01|    0.00|
$*
$*    998 Version: 9.1.3 2012/02/16
$*    999 End INFO-L3D-Data
$*    Catalogue: Metric-Standard(1) Metric-Nuclear(2) US-Standard(3) US-Nuclear(4)
$*    Catalogue#:1
$*

$*        global info start

Height B-EG B-DB X-Coordinate    Angle   Y-Coordinate    Angle   Z-Coordinate    Angle   Hanger-mark
  1790    0    0        0.00     0.00          0.00     0.00          0.00     0.00   Valve Hangers

$*        global info end

$*        partslist start

Type  Ori Rot90 Ori_Bottom  E_DIM Pipe Width X-Value Y-Value Z-Value Top-Con
782111  0     0         0     65    0   140       0       0       0       0
612912  0     1         0     50    0     0       0       0      65       0
672113  0     0         0     35    0     0       0       0     115       0
111215  0     0         0    445    0     0       0       0     150       0
672313  0     0         0    885    0     0       0       0     595       0
602912  1     0         0     40    0     0       0       0    1480       0
431329  0     0         0    270  120     0       0       0    1520       0

$*        partslist end
```

7.11 Example of a ITM-file for SupportModeler

```
' LISEGA AG, Version: 9.1 2010/08/06
PROMPTS
CATEGORY, String, Read LICAD ITM Files
DESCRIPTION, String,PS5719_____; LICAD N°: 6001-3-26005
OBJ_LEN_UNITS, String, MILLIMETERS
PLACE_POINTS, Int, -102

SCRIPT

PlaceItem( "SM_Lisega_2010", "TYPE43", "", LOC(0,-45,0), "size", "431719" )
PlaceItem( "SM_Lisega_2010", "TYPE43", "", LOC(0,45,0), "size", "431719" )
PlaceItem( "SM_Lisega_2010", "TYPE77", "", LOC(0,0,250), "size", "771739", "load_grp", "5" )
PlaceItem( "SM_Lisega_2010", "TYPE61", "", ROTX(180)+LOC(0,0,385), "size", "615912" )
PlaceItem( "SM_Lisega_2010", "TYPE67B", "", LOC(0,0,385), "size", "675313", "length", "948" )
PlaceItem( "SM_Lisega_2010", "TYPE25", "", ROTX(180)+LOC(0,0,1333), "size", "255118", "dir", "up",
"working_trav", "0", "hot_load", "11.29", "preset_licad", "17" )
```

7.12 Network installation

Important points before installation

Every work-place requires a program / serial number. These are free of charge and can be ordered as necessary.

LICAD must be installed directly on the server. Updates must also be installed directly on the server. Installation should not be made from a client computer, as this computer cannot be automatically set up correctly as a client computer later on.
LICAD can be installed directly on one server, or from a client computer on to a server. Updates must always be made from a computer that LICAD was installed from, and also be installed directly on the server. The installation should not be made from a client computer, as this computer cannot automatically be correctly set up later as a client computer.

Setting up a client is normally limited to arranging a link to the 'LICAD2010.exe' program on the server. All further settings and copying activities are automatically executed by LICAD. For this reason it is recommended to make the first start of LICAD on a client computer under Windows NT4, Windows 2000 or Windows XP with administration rights. All further program starts can then be made with normal rights.

All data is saved by LICAD in Paradox tables. To access the Paradox tables, LICAD needs the Borland Database Engine (BDE), so every computer using LICAD must have BDE installed. If this is not the case, LICAD will note it on starting and install and configurate BDE optionally. For security files LICAD requires the DAO drives. These will also be automatically installed on the client computer on starting, if necessary.

BDE consists of a series of DLL's, language files and an administration program, the BDE administrator (bdeadmin.exe). Modifications to configuration of BDE can be executed manually with the program, for example adding an alias. An alias is a synonym for a directory in which database files, in our case the Paradox tables, are to be found. With the BDE administrator modifications for access to datat can be made.

To be able to use LICAD in network, some standard settings must be altered. This happens automatically by installation. For the other client computers LICAD is to be used on, some preparatory work has to be carried out by the installation computer (server), so that LICAD can automatically make any necessary adjustments to client computers. The BDE Setup program is also installed during network installation with the program, it is possible to store and adapt settings in the computer registry (bdenet.ini). The settings required are normally made through the installation program in the 'bdenet.ini' file.

The installation program sets up its own BDE configuration file for the client computer. On alterations to the BDE for the client computer, this configuration file must be opened beforehand if necessary with the BDE administrator.In this BDE configuration, the alias 'LICAD' must indicate a directory on the local hard drive of each client computer. The name of the configuration can be set for the clients via the input 'CONFIGFILE01' in the section '[Database Engine]' in the file 'bedenet.ini' with the aid of the 'BDE Set up' program (e.g.: '\\server\licad\idapi32net.cfg').
This is required because on network installation the client computer are to copy the source data on their local hard drive, so that an appropriate response-time in network operation can be guaranteed.

If it is noticed that this input in the registry is missing when LICAD (network version) starts up, an inquiry appears as to whether these settings should be made. LICAD will then make the settings from one of these two INI files.If the information in the INI files is incorrect, LICAD will only function partially or not at all, after reading in the information. PLEASE PAY ATTENTION TO INPUT !

We recommend installation of BDE on a network drive (server) during network installation, so that BDE need not be installed (copied) on every computer.

ATTENTION, if BDE is already installed on a computer !In this configuration of BDE should be checked beforehand. The configuration of the two BDE's can then be integrated by the BDE administrator.

7.12.1 Procedure on network installation

If BDE is not yet installed, the sub-directory BDE in the installation path is suggested as a target directory for BDE. This suggestion can of course be modified.

If you install directly on to the server allow access to the installation directory after installation. It is best to use ‘LICAD’ as the access name, so that it is quite clear what kind of access is meant.

If you install on to the server from a client computer, it is best to use the UNC path for installation (e.g.: ‘\\server\licad’ as a target directory, ‘Access name LICAD’) and not the drive lettering that may possibly be connected with it. In this way you avoid two problems: not all computers have to use the same drive lettering to allow access, and no configuration is required if the drive lettering changes.

7.12.1.1 What to do if installation is made on a computer already installed with BDE

If the directory in the BDE already installed is also to be the LICAD-BDE directory, you can install quite normally. Under certain circumstances, additional permission to access BDE must be set up, otherwise the current BDE configuration must first be secured on this computer if, for example, you are installing from a client computer.

Two different ways are possible: BDE is only set up for 32-bit or 16-bit applications. With the BDE administrator you can find out how BDE is configurated. Start the BDE administrator and ‘Options’ from the ‘Object’ menu. The information required can then be read in the dialog window displayed.

If BDE is only configurated for 32-bit applications, you must start the program ‘regedit.exe’ and export the keys

‘HKEY_LOCAL_MACHINE\BORLAND\BLW32’ and HKEY_LOCAL_MACHINE\BORLAND\DATABASE ENGINE’

and import them again after installation. In this way you again set up the BDE configuration existing before the installation of LICAD.

If BDE is also configurated for 16-bit applications, the sections ‘[IDAPI]’ and ‘[BORLAND LANGUAGE DRIVERS]’ must be secured in the ‘win.ini’ file in the windows directory, and be recreated after installation. Besides this, you should secure any registry input there might be (as described in the previous section) and recreate it after installation.

The further configuration of BDE on this computer then follows with the BDE administrator. See the section 7.12.2*‘Settings in BDE’ for this.’*

7.12.2 Settings in BDE

1. A database alias with the ‘LICAD_9_0’ should be available. The type of driver is ‘standard’. The driver is ‘paradox’, the value for ‘enable BCD’ is ‘FALSE’ and the value for ‘path’ is the sub-directory ‘DB’ in the LICAD installation directory on the local computer (e.g.: ‘\C:\program files\LISEGA\LICAD\DB’).

2. In the field of configuration, the input ‘system\init\local share’ must have the value ‘TRUE’. In this way, general access to the paradox tables is possible.

3. The input ‘Treiber\Native\Paradox\Net Dir’ must indicate the same directory in the network for all computers (e.g. ‘\\SERVER\LICAD’). In this directory is then found the file ‘PDOXUSRS.NET’, which regulates the general access to data. If two computers have deviating settings of this input the second user who attempts to start ‘LICAD Receives the error message ‘The directory is controlled by another network file’, and LICAD is closed down again. If problems should arise (e.g.: when a client computer crashes), delete the file ‘PDOXISRS.NET’ and the files ‘PARADOX.LCK’ and ‘PDOXUSRS.LCK’ from the subdirectory ‘B’ if no one else is using LICAD at the time. At the next start of LICAD these files are created again automatically.

7.12.3 Integration of two BDE's

Start the BDE administrator program for this and call up the menu item 'Integrating configuration from the 'opject' menu. A file selection dialog appears. Select the BDE configuration file which is to be imported into the current BDE configuration from this dialog.

For example : You have installed LICAD and BDE on a server, having previously secured the BDE to hand and subsequently recreated it. This means that when you callup the BDE administrator program, your old BDE configuration will be displayed (without LICAD alias). To import the BDE settings now for LICAD, start the program part 'Integrated configuration' as shown above. Change to the directory in which BDE for LICAD was installed. Select the 'IDAPI32.CFG'file and press the 'Open' button. In this way the settings are read out of this file and saved in the current configuation file. Only the database aliases are taken over. The setting of the entry 'NET DIR' and 'LOCAL SHARE' must be adapted manually according to the information in the section *'Settings in BDE'.*

7.12.4 Installation of a client

Before the first client can start LICAD, the settings in the INI files must be adapted with the BDE setup program.

The client can start the 'LICAD32.EXE' program. This is easiest to achieve if you create a connection on the client computer to the LICAD32.EXE file which has a working directory (on the server) where the LICAD32.EXE file is to be found.

The first start :
On the first start, LICAD notes that the BDE is not installed or not configurated. LICAD asks whether the missing registry input should be provided. On the answer 'No', the program ends. On the answer 'Yes', a further inquiry appears; the user must select which configuration file ('bdenet.ini' or 'bdelocal.ini') or which type of configuration (network or local) should be read in. If the file exists in the installation directory , the information contained therein is entered into the registry. If the file does not exist, there is a corresponding message and the program is ended.
After installation of BDE, files are copied from server to client so that the program is not slowed down considerably by the network. These are mainly the paradox tables in which LICAD looks for the appropriate components. An inquiry follows as to where these files are to be installed.
Always name a local hard drive here, otherwise the network adversely affects the working speed of the program.
When operations are completed, LICAD starts.

LICAD then requests registration. Each working position still requires an independent program number. This is necessary as the data in LICAD are administrated via this number.

Every further start:
On starting, LICAD still checks the BDE configuration and the local data. If an update modifying the basic data (the local paradox tables) is installed, LICAD automatically updates the local information on starting.

7.12.5 Graphical representation of a network installation of LICAD

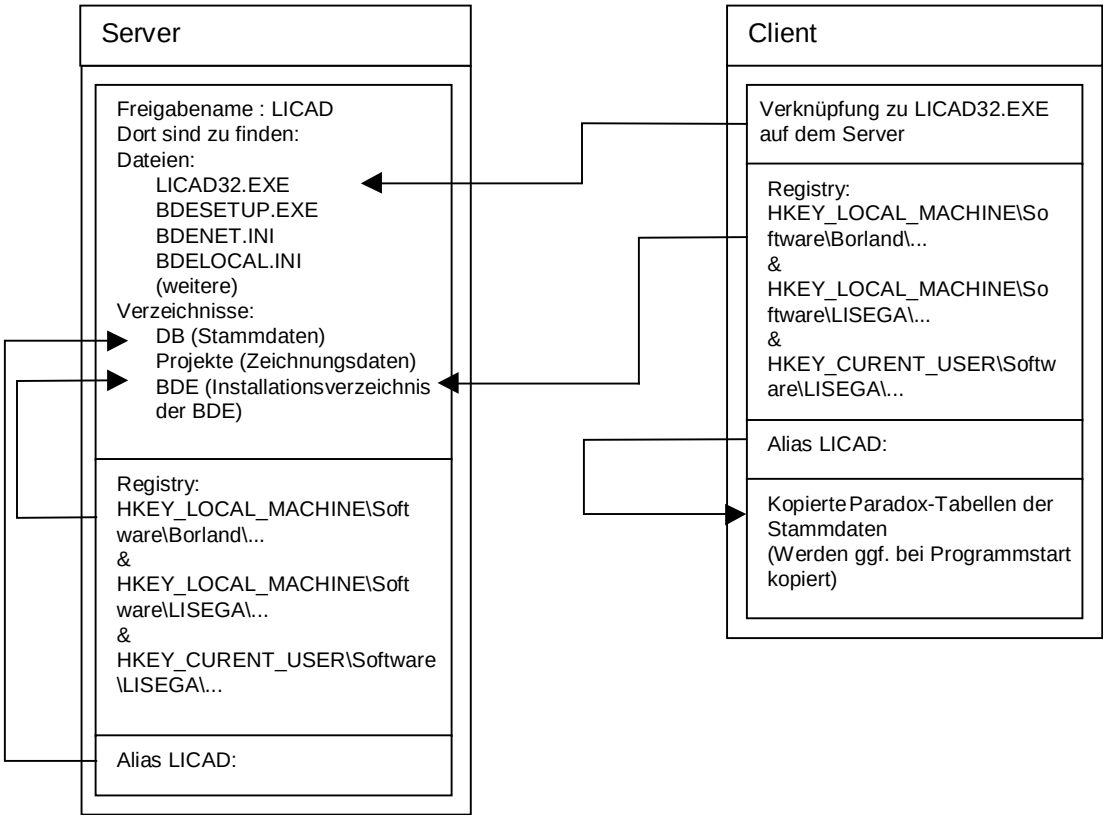

7.12.6 The 'BDENET.INI' file

An example of the 'BDENET.INI' file follows. This file can be found in the LICAD installation directory if the network installation was selected. LICAD exports the data from this file if LICAD is started on a client computer and finds no valid BDE configuration. If a valid BDE configuration is present on a client computer, it is to be adjusted manually (see section 7.11.8 'Manual BDE configuration') The values exported are written into the registry so that the BDE functions correctly.

The larger entries in heavy type have particular significance. They are therefore explained in detail in detail in the following section 7.12.7, 'Description of the specially important BDE entries'.

Content of the BDENET.INI

```
[Database Engine]
DLLPATH=\\Server\LICAD-Freigabe\bde
RESOURCE=0006
CONFIGFILE01=\\Server\LICAD-Freigabe\bde\idapi32net.cfg
UseCount=1
SaveConfig=WIN32


[Database Engine\Settings\DRIVERS\PARADOX\INIT]
NET DIR=\\Server\LICAD-Freigabe\bde
VERSION=4.0
TYPE=FILE
LANGDRIVER=asciiintl

[Database Engine\Settings\DRIVERS\PARADOX\TABLE CREATE]
LEVEL=4
BLOCK SIZE=2048
FILL FACTOR=95
STRICTINTEGRTY=TRUE
```

```
[Database Engine\Settings\SYSTEM\FORMATS\DATE]
SEPARATOR=.
MODE=1
FOURDIGITYEAR=TRUE
YEARBIASED=TRUE
LEADINGZEROM=TRUE
LEADINGZEROD=TRUE

[Database Engine\Settings\SYSTEM\FORMATS\NUMBER]
DECIMALSEPARATOR=.
THOUSANDSEPARATOR=,
DECIMALDIGITS=2
LEADINGZERON=TRUE

[Database Engine\Settings\SYSTEM\FORMATS\TIME]
TWELVEHOUR=TRUE
AMSTRING=AM
PMSTRING=PM
SECONDS=TRUE
MILSECONDS=FALSE

[Database Engine\Settings\SYSTEM\INIT]
VERSION=4.0
LOCAL SHARE=TRUE
MINBUFSIZE=128
MAXBUFSIZE=4096
LANGDRIVER=ANSIINTL
MAXFILEHANDLES=64
SYSFLAGS=0
LOW MEMORY USAGE LIMIT=32
AUTO ODBC=FALSE
DEFAULT DRIVER=PARADOX
SQLQRYMODE=<empty>
SHAREDMEMSIZE=4096
SHAREDMEMLOCATION=<empty>
MEMSIZE=24
DATA REPOSITORY=Borland Data Dictionary
MTS POOLING=FALSE

[BLW32]
BLAPIPATH=\\Server\LICAD-Freigabe\bde
LOCALE_LIB1=\\Server\LICAD-Freigabe\bde\USA.BLL
LOCALE_LIB2=\\Server\LICAD-Freigabe\bde\EUROPE.BLL
LOCALE_LIB3=\\Server\LICAD-Freigabe\bde\OTHER.BLL
LOCALE_LIB4=\\Server\LICAD-Freigabe\bde\CHARSET.BLL
LOCALE_LIB5=\\Server\LICAD-Freigabe\bde\CEEUROPE.BLL
LOCALE_LIB6=\\Server\LICAD-Freigabe\bde\FAREAST.BLL
LOCALE_LIB7=\\Server\LICAD-Freigabe\bde\JAPAN.BLL
```

7.12.7 Description of specially important BDE entries

DLLPATH	This variable indicates the directory containing the DLL's (among others, 'idapi 32.dII') of the BDE (e.g. \\SERVER\LICAD\share\bde). If this entry is set incorrectly, as a rule the following error message appears: 'An error occurred while attempting to initialize the Borland Database Engine (error $ 2108)'.
CONFIGFILE01	This variable contains the file name of the configuration file fo the BDE (e.g.:

	\\Server\LICAD share\bde\idapi32net.cfg). If this variable is incorrectly set the following error message follows as a rule: iException EDBEngine Error in module LICAD.EXE at... Unknown database. Alias: GLOBDAT. For simpler administration all computers on which LICAD is to run should use the same configuration file. The content of this file can only be processed with the program BDE Administrator 'Bdeadmin.exe' (see section 'Manual BDE configuration').
NET DIR	If the entries on different computers indicate differing directories, the following error message appears on the computer LICAD later stars up on: 'Directory is controlled by other.NET file. Directory: 'currently used directory' File:'determined from LOGfile <Directory>\PDOXUSRS.LCK' This message states that in the 'PDOXUSRS.LCK'file, the NETDIR is used with the 'Directory' entry. The 2 files 'PARADOX. LCK' and 'PDOXUSRS.LCK' are as a rule to be found in the installation directory =or the 'DBÄ subdirectory of LICAD.
LOCAL SHARE	This entry must be set at TRUE so that simultaneous access to the Paradox tables is guaranteed.
BLAPIPATH	This variable contains the directory where the language file (*.BLL) of the BDE are to be found.
LOCALE LIB [1-n]	The individual language drivers.

7.12.8 Manual BDE configuration

Before starting you should secure the existing configuration files (see entry 'CONFIGFILE01' in the registry and if required 'idapi32net.cfg')
The configuration of the BDE must always proceed via the program BDE Administrator 'bde admin.exe'

This program may only be run on the compute from which LICAD (incl. BDE was installed, called server. On installation, the BDE and the BDE administrator register themselves in the registry. As the entries for the BDE administrator are not present on the client computers, it will not function correctly on them. In correct entries, or none at all, will be written into the configuration file. The complete configuration would thereby be lost and a new configuration file would have to be created (copying back the security copy of the configuration file).

The server uses a different configuration file from the clients, as it holds all data locally. For this reason the configuration fill for the client computers (normally: 'idapi32net. cfg') must first be opened (Objektmenu -> 'Open configuration'). The alterations described below are then to be made in this file. After every alteration you should access the 'Accept' function in the object menu (STRG + A); in this way the alteration is stored.

An alias (a data base) with the name 'LICAD' must be created for LICAD.
Type: Standard
Default driver: Paradox
Path: To set the directory on the client's local drive (e.g. 'c:\LICAD 7.1/DB')
Enable BCD: False

In the configuration sector the following settings are to be made:

Drivers/Native/Paradox
NET DIR As described above
LONG DRIVER 'ascii' ANSI
System/Init: LOCAL SHARE: TRUE

If you close down the BDE administrator the program asks you if the 'idapi32net.cfg' configuration file is to be stored as standard. **Always** answer with **no** as otherwise the server uses the wrong configuration file.

7.13 What to do if ...

LICAD will not start
First make sure no one is working with LICAD
Delete the ‘PDOXUSRS.NET’ file. On the next start by LICAD, this file will be created automatically.
Delete any possible ‘PARADOX.LCK’ and PDOXUSRS.LCK’files in the LICAD installation directory or in the ‘DB’sub-directory of the LICAD installation directory.

The message ‘The directory is controlled by another network fiel’ appears.
First make sure no one is working with LICAD
Delete the ‘PDOXUSRS.NET’ file, if no else is using LICAD at the same time. On the next start by LICAD, this file will be created automatically.
Delete any possible ‘PARADOX.LCK’ and PDOXUSRS.LCK’files in the LICAD installation directory or in the ‘DB’sub-directory of the LICAD installation directory.
Check the setting of ‘NET DIR’entry in the paradox driver with the BDE administrator program and if necessary correct the entry.

The message Exception EDBEngineError in module LICAD32.exe at ..... . Unknown database. Alias : GLOBDAT’ appears.
The alias LICAD is not present in the BDE configuration. Insert this alias correctly as described in the section ‘Settings in BDE’.

The message ‘Exception EDBEngineError in module LICAD32.exe at ..... . Path not found. FILE: <Pfadangabe>\PDOXUSRS.LCK’ appears:
The LICAD alias is not correctly entered in the BDE configuration. The directory adjusted for the paradox tables is incorrect. Set up this alias as described in the section ‘Settings in the BDE’.

The message ‘BDE configuration error #2 (Alias: LICAD2010 ?)’ appears: The Alias LICAD2010 is not correctly entered in the BDE configuration. The directory set for the Paradox tables is incorrect. Please set up this Alias correctly as described in the section ‘Settings in BDE.’

The message ‘BDE configuration error #2 (Alias: LICAD_TEMPDB?)’ appears: A temporary directory for intermediate storage could not be set up.

7.14 Listing LISEGA.INI

```
[BOOT]
CAD=MS95
CADPATH=c:\win32app\ustation

[MS95]
SEEDFILE=lisegaa3.dgn
DWGINSFI=dwgin.sfi

[CATALOG]
Chinese, Simplified=
ENGLISH=
FRENCH=
GERMAN=E:\Deutsch\LISEGA Katalog 2010.pdf
Italian=
Japanese=
POLISH=
Portuguese=
Spanish=

[URL_WEBSITE]
Chinese, Simplified=
ENGLISH=http://www.lisega.com/
FRENCH=
GERMAN=http://www.lisega.de/
Italian=
Japanese=
POLISH=
Portuguese=
Spanish=

[URL_UPDATEPAGE]
Chinese, Simplified=
ENGLISH=http://www.lisega.com/pagesuk/licad-uk/licaddl.htm
FRENCH=
GERMAN=http://www.lisega.de/pagesdeu/licad/licaddl.htm
Italian=
Japanese=
POLISH=
Portuguese=
Spanish=

[IMPORTFILE_CFG]
AliasCfgFile=D:\LICAD V 2010\AliasImport.LFG
SigmaCfgFile=D:\LICAD V 2010\SigmaImport.LFG
```

8 Index

3

3D coordinates
  L3D 32
3D Reference Coordinates 32
3D representation 61, 64

A

Add additional feats 51
Additional coating 17
Additional Services 17
  Delete from selected drawings 50
Addtional feats. 17
Adjustment list 57
  Export 57
Adjustments 12
Alternative Figures 31
Alternative selection of clamp base 29
Angle
  Pre-assembly 13
ASCII format 59
ASCII-/DXF interfaces 59
ASME B31.1 9
AutoCAD 59
Axes 14

B

Background colour 22
Backup drawings 40
base clamp
  setting for type 49 / 57 17
BDE see: Borland Database Engine
  BDENET.INI 92
  BLAPIPATH 92, 94
  CONFIGFILE01 92, 93
  DLLPATH 92, 93
  Important settings 93
  Integration 91
  LOCAL SHARE 92, 94
  LOCALE_LIB 92, 94
  Manual configuration 94
  NET DIR 92, 94
  network 91
  Settings 90
BDENET.INI 92
bearings 16
BLAPIPATH 92, 94
Blocking position
  Constant hanger 13
Borland Database Engine 89, see: BDE
BorlandDatabaseEngine 90, 91
Building attachment 16
Buttons
  In List Forms 56

C

CAD program
  LISEGA.INI 60
  start 60
CadCentre 64, 79
Case of damage 25
Case of emergency 25
Catalog
  selection 12
Clamp base
  Alternative selection 29
clamp bases for cold block (cryogenic) systems 26
clamps 16
Clamps
  Two-bolt 16
Cold block clamp bases 26
Color 60
Company emblem 67
CONFIGFILE01 92, 93
Configuration
  Dymanic stress 74
  Pipe saddle/bearing 75
  Staic stress 68
  Supports 68
Configurations 15
connection geometry 16
constant hanger 10
  specification 8
Constant hanger
  Blocking position 13
  Seated, incl. support 17
coordinate cross 19
Coordinates 14
  L3D 32
Copy drawings 40
Copying 36
Cotes 28

D

Data rescue 3
Dead weights 28
Deleting 40
Deleting additional services from drawings 50
Deleting drawings 39
Description of specially important BDE entries 93
Differences 28
Dimensioning
  Units 20
Directory 53
DLLPATH 92, 93
Drawing
  Backup 40
  Copy 40
  Delete 39
  Modify 35
  Print 54
  Reading in 41
  Revising 35

Saving a 33
Selection 43
Send via e-mail 42
drawing number 8
Drucken 7
Drwawing
Printing a 33
DXF
Export 59
Settings 60
DXF format 59
DXF.CFG 60
Dynamic loads 25
Dynamic stress 25
Configurations 74

E

Einstellungen
Import 47
Elevation
cotes 28
Differences 28
Elevation differences 28
e-mail 42
Entering data on pipe supports 23
Excel
Export support data 49
Export
Adjustment list 57
DXF 59
Hanger mark list 56
Summary parts list 55
Export support data 49

F

Feldnamen für den Import 46
firm logo 19
Font selection 21
Force difference 9

G

graphic 1
Graphic representation 29
Graphical representation of a network installation 91

H

H&S Dictonary DB
Installation 80
hanger
specification 8
Hanger
pre-selection 28
Specifications 28
Hanger and pipe clamps/bearing
Ordering single parts 36
Hanger data list 57
Hanger mark list 56
Print 56
How to ... 95
hydro-load 13

I

IL3 module 61
Installation 83
Settings 63
Import
Feldbenennungen 46
Meaning of abbreviations for the column headings 46
Spaltenüberschriften 46
Import support data
Protocol 48
UNC units 48
Importeinstellungen 47
Importing support system data 44
Importoptionen 47
Installation 2, 3
Client installation 91
Graphical representation of a network installation 91
IL3 module 83
Network 89
Procedure on network installation 90
Installation description of the LISEGA PDMS catalog 79
Intergraph 61

K

KG 12
KN 12

L

L3D 32, 83
Export 61
L3D file
Example 87, 88
Language 6
Language for printing 20
Layer 60
Length of the threaded rods 14
Letter head
Units 20
Level A/B 25
Level C 25
Level D 25
LICAD
Start 3
LICAD drawing
title block 79
LIF file 84
Lift-off restraints 26
LISEGA
Load groups 77
LISEGA Input File (*.lif) 84
LISEGA Output File (*.lof) 85
LISEGA price list 18

LISEGA.INI 60
Load
  Hydro 13
  Input values 12
  Warm/Cold 12
Load group 77
Load group sectioning 77
Load groups 77
load reserve 10
Load reserves 10
LOCAL SHARE 92, 94
LOCALE_LIB 92, 94
Location plan 19, 31
LOF file
  Example 85
Long variable spring hangers 16

M

Main menu 5
Manual BDE configuration 94
menu language 6
metric 12
MicroStation 61
Modify
  Drawing 35
Modify project data 50
MS-Outlook 42

N

NET DIR 92, 94
Network
  Installation 89
Normal/Upset 25
north point 19
North point 32
Nuclear engineering design 18

O

operating load 10
Optionen
  Import 47

P

Part list
  Supplementing a 35
Parts list 55
  Print 55
PDMS 64, 79
  catalog upgrade 80
  H&S Dictonary DB installation 80
PDMS catalog
  Installation 79
PDS
  Data exchange 61
  Design Review 62
  Placing a single component
    in MicroStation 63
  SmartPlant Review 62
pipe clamp
  additional surface preparation 17
Pipe clamps 16
Pipe diameter 23
Pipe movements 24
Pipe saddles 26
Pipe saddles/bearings
  Configuration 75
Pipe support
  Generation 23
  Positioning of 16
Pipe-surrounding components 15
Placing a single component
  in MicroStation / PDS 63
Positioning of the pipe support 16
preassembly
  charge for 17
Pre-assembly 17
Presetting 17
  charge for 17
Pre-setting symbols 19
Prices 18
Pricing 17
Printer
  settings 19
Printing 19, 54, 55, 56, 57
  Language 20
  Options 19
  Weights in parts list 20
printing out a drawing 33
Printing out adjustment lists 57
Printing out complete parts lists 55
Printing out drawings 54
Printing out individual parts lists 55
Procedure on network installation 90
Project data 3, 8, 38
Project data administration 3, 38
PTFE sliding plates 16

R

rated load 10
Reading in drawings 41
registering 3
Reserves 10
  for rigid supports 10
  Hanger 10
  Travel 10
  Variable spring hanger 9
reset the counter number of the LICAD drawing
    3
Revising drawings 35
Roller bearings 26

S

Saving a drawing 33
Search projects 39
Selection of drawings 43
Selection of the configuration of supports 27
Selection of the units 12
Set output path (.LIF) 82

Settings in BDE 90
Shockabsorber 16
Special connection sizes 16
special diameter 24
Specification 28
Specification of the type of hanger 28
Specifications 8
Sprache 7
Spring hanger
  Long 16
  Seated, incl. base plate 17
Stanchions 26
Start
  LICAD 3
Static stress 23, 77
  Configurations 68
STLfile 59
Stress
  cryogenic 26
  Dynamic 25
  Pipe saddles 26
  Static 23
Summary parts list 55
  Export 55
  Print 55
Supplementing a parts list 35
Support
  Selection of the Configuration 27
support system data
  Import 44
Supports configurations 68
symbols 68
System requirements 2
System setup 20

T

TEC file 59
Text Height 60
Threaded rods
  Length 14
title block description 79
tolerance 24
Travel reserve 10
Travel reserve for snubbers 10
troubleshooting 95
two-bolt clamps 16
TXT file 59
Type
  of Clamp 16

U

U-bolts 26
UNC 12
UNC units
  Reading in 48
Uninstall 3
units 12
Units in the letter head 20
Units of the dimensioning 20

V

variable spring hanger
  specification 8
Variable spring hanger 17
  Force difference 9
  range of movement 9
VGB 9

W

Weight specifications in the parts list 20
Weld-on clamp bases 17
Welds 13
without pipe-surrounding components 15