Standard Supports 2020 US

LISEGA

Standard Supports 2020

Edition: May 2017 US

The LISEGA product program covers all components required for the implementation of modern concepts in the support of pipe systems.

These components correspond to the LISEGA standardization philosophy and are organized in a modular system with load and attachment compatibility.

Containing the complete product program, this catalog is in full compliance with LICAD, the LISEGA pipe support design program.

The catalog and LICAD can be downloaded from www.lisega.de.

LISEGA reserves the right to introduce revisions in the interest of further technical development.

Zeven, Germany
Headquarters

Kodak, TN, USA

Bondoufle, France

Shanghai, China

Netherton, England

Wittenburg, Germany
(LISEGA affiliate for fasteners)

Zeven, Germany
(LISEGA affiliate for vibration control)

Standard Supports 2020

Performance with System

Customers and their suppliers depend on each other for mutual success. We at LISEGA want to show ourselves to be partners of value to our customers with a comprehensive and effective performance package. We are prepared to provide top performance day in and day out. Our goal is customer satisfaction and only if we achieve that objective are we satisfied too – that's where our motivation is coming from.

(from left to right)
Dr. Ekkehard Heinrichs,
Chief Technical Officer
Hans-Herlof Hardtke,
Chairman of Supervisory Board
Dr. Georg Friberg,
Chief Executive Officer
Hans-Heiner Eddelbüttel,
Chief Finance Officer

Right from the beginning, some five decades ago, we have concentrated exclusively on pipe supports, thoroughly and comprehensively.

The quality and efficient utilization of our products are just as important to us as our reliability and low application costs.

The basis is a well-engineered product program of more than 12,000 standardized support components forming a clearly arranged functional modular system. The resulting efficiency, and in particular by using our LICAD design software, provides additional savings in costs both in planning and installation.

Confident that we have a committed work force to support us, the LISEGA management invests all its energy into satisfying customer requirements. For this, and for our mutual pleasure in seeking success, people at LISEGA are working together with our customers, goal-orientated and highly motivated by **performance with system**.

L I S E G A

Hans-Herlof Hardtke

Dr. Georg Friberg

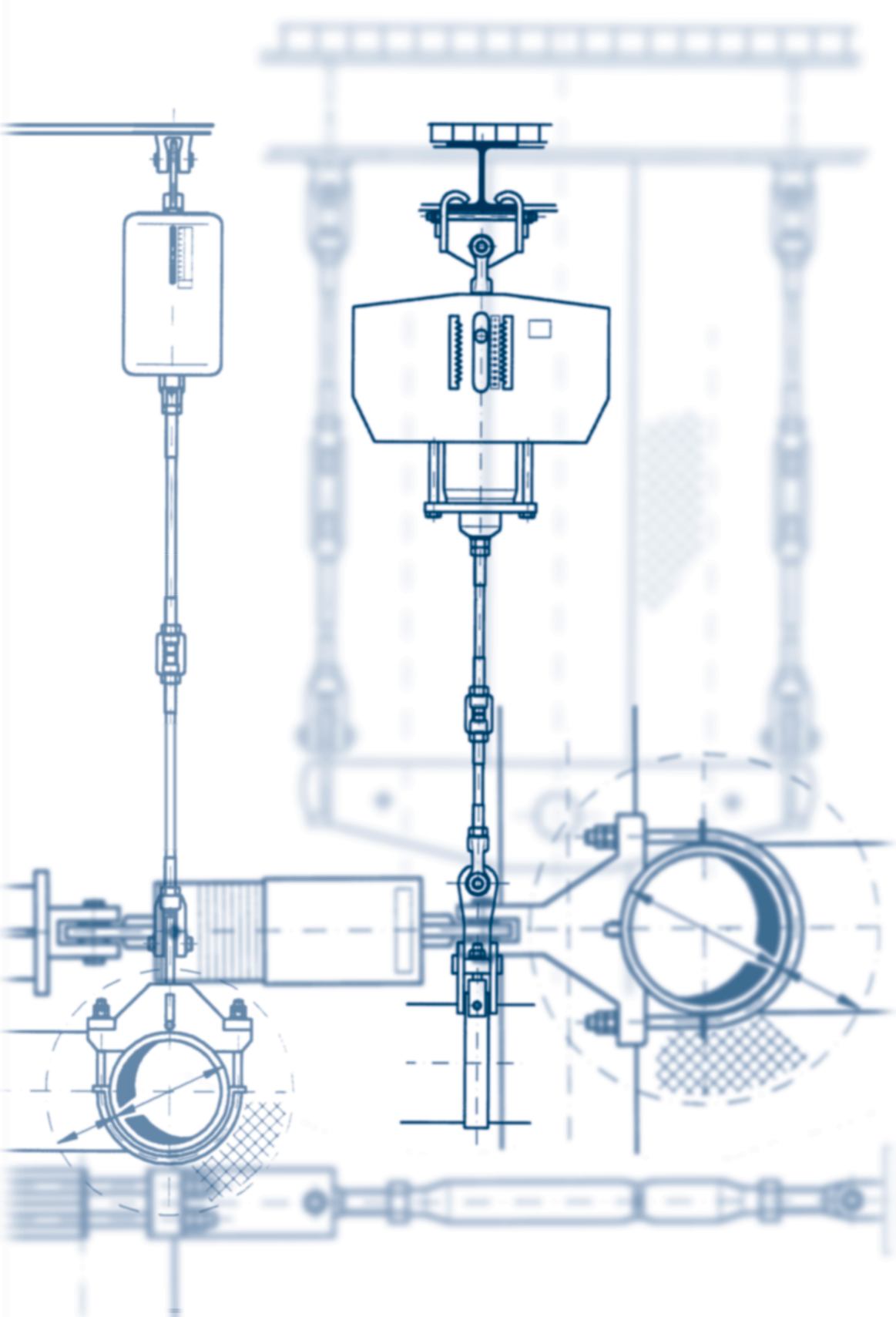

Overall contents

Detailed information on contents in the individual sections | **Product group**

Technical specifications	0
Constant hangers, constant supports	1
Spring hangers, spring supports	2
Snubbers, rigid struts, energy absorbers, viscoelastic dampers, dynamic clamps	3
Pipe clamps, clamp bases, pipe connecting parts	4
Roller bearings, pipe saddles, cryogenic clamp bases	5
Threaded connecting elements	6
Structural attachments, trapezes, clamps, slide plates	7
LISEGA software tools for planning and design	8
Supplementary services, engineering, field service	9

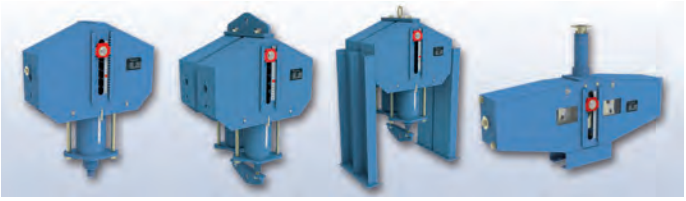

Product group 1
Constant hangers, constant supports, types 11-14, 16-19

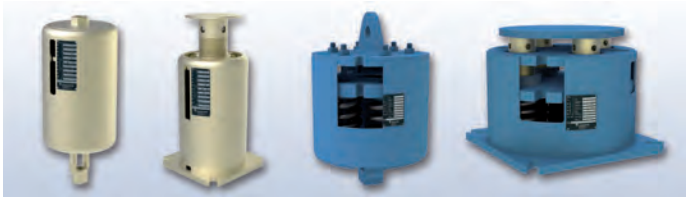

Product group 2
Spring hangers, spring supports, types 20-22, 25-29

Product group 3
Snubbers, energy absorbers, rigid struts, viscoelastic dampers, dynamic clamps, types 30-39

Product group 4
Pipe clamps, clamp bases, pipe connecting parts, types 41-46, 48-49

Product group 5
Roller bearings, pipe saddles, cryogenic clamp bases, types 51-58

Product group 6
Threaded connecting elements, types 60-67

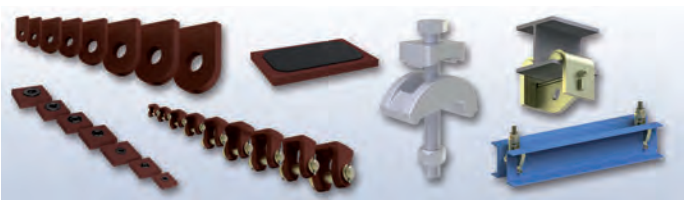

Product group 7
Structural attachments, trapezes, clamps, slide plates, types 73-79

Product group 8
LISEGA software tools for planning and design

Product group 9
Supplementary services, engineering, field service

Technical specifications

0

TECHNICAL SPECIFICATIONS

PRODUCT GROUP 0

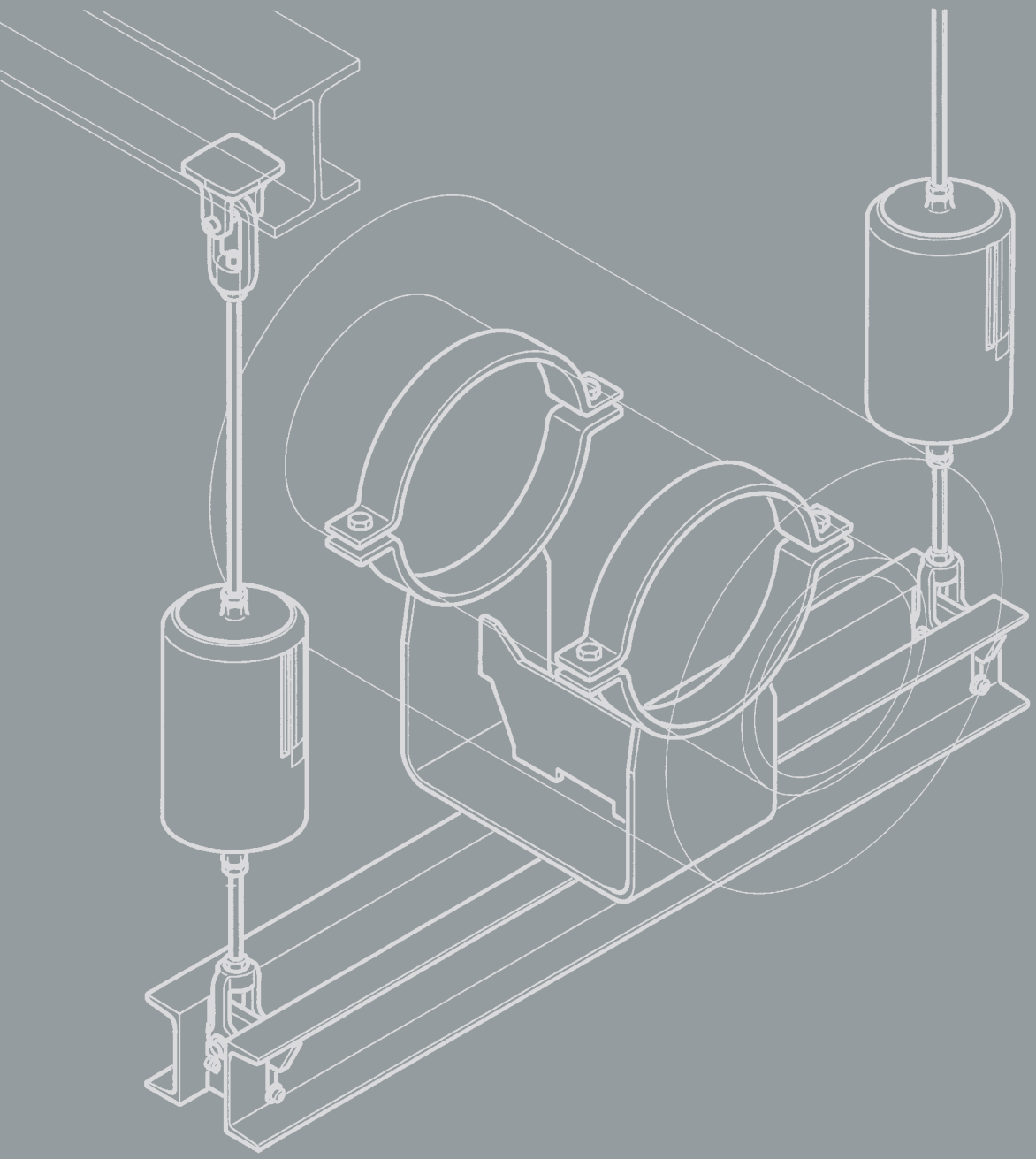

LISEGA

Technical specifications

Contents | Page

1. Standard Supports, requirements and definition 0.1
2. LISEGA Standard Supports 0.1
3. LISEGA Modular System 0.2
3.1 User benefits 0.2
3.2 Functionality 0.2
3.3 Product groups 0.2
3.4 Load groups 0.2
3.5 Travel ranges 0.3
3.6 Standardized components 0.3
3.7 Modular System for load and connection compatibility 0.4
4. Permissible loads 0.5
4.1 Statically and dynamically loaded components 0.5
4.2 Product group 4 . . . . . 0.5
4.3 Product group 5 . . . . . 0.5
4.4 Load tables 0.6
5. Type designation system 0.7
6. Standards and codes 0.9
7. Materials 0.9
8. Welding 0.10
9. Surface treatment against corrosion 0.10
9.1 Standard corrosion protection 0.11
9.2 Increased corrosion protection 0.12
9.3 Hot dip galvanized version 0.13
10. Operational behavior 0.14
11. Connection dimensions 0.15
12. Quality Management and IMS 0.16
13. Suitability tests, type tests 0.17
14. Standard versions and increased requirements 0.18
15. Form of shipment 0.19
16. Warranty 0.19
17. Technical modifications. 0.19

Technical specification

The products outlined in this catalog – Standard Supports 2020 – are fully in line with the latest developments in support technology and satisfy general requirements for plant installation at the highest level. For the general design of LISEGA standard supports, standardized criteria are applied. They are described in the following Technical specifications and apply to the contents of this catalog. Component related features are outlined in the corresponding sections of the product group sections and in the type data sheets.

Unless expressly agreed otherwise, the stipulations in the catalog Standard Supports 2020 apply to all our shipments.

1. Standard Supports, requirements and definition

1.1 Requirements

For the support of industrial piping systems the use of standard supports is regarded as well-proven, up-to-date technology.

Only a high level of standardization can satisfy the demand for technically superior and economical support components. The complex requirements for modern pipe supports are:

- **reliable functioning**
- **maintenance-free operation**
- **quick delivery**
- **low component prices**
- **computerized design systems**
- **easy installation**
- **favorable performance weight ratio**

1.2 Definition

Standard supports must fulfill the following criteria:

- **component shapes are uniform and designed to make the optimum use of material**
- **components are compatible regarding dimensions and load capacity**
- **components are cataloged and clearly designated via an identification system**
- **components are manufactured in series production**
- **components comply with the approved standards and international codes**
- **the functional capacity, suitability and durability of the components is well proven**
- **components are certified and approved for use by independent certification bodies**

The relevant codes for pipe supports in German and European plant construction (power stations), the **DIN EN 13480-T3** and **VGB Guideline R 510 L**, require the preferential use of standard supports and define the criteria as follows:

"Standard Supports are pipe support components in which the design in form and dimensions, as well as the design data regarding loads, are specified, verified and cataloged and where the components are manufactured according to defined, reproducible processes, e.g. series production".

2. LISEGA Standard Supports

2.1 Scope

At LISEGA, standard supports form the basis of a comprehensive performance package. A complete product program of more than **12,000 standardized components** covers all support situations, operational loads, temperatures and travel ranges normally experienced in piping systems in industrial plant construction:

- **≤ 1200°F operating temperature for pipe clamps and clamp bases**
- **≤ 90 kips nominal load for all mainly statically loaded components**
- **≤ 224 kips nominal load for rigid struts and standard snubbers**
- **≤ 1124 kips design load for large-bore snubbers**
- **≤ 35.43 inch travel range for constant hangers**
- **≤ 15.75 inch travel range for spring hangers**

2.2 Design features

Specially developed components are available for the various support functions. Fundamental design principles were taken into consideration in the design and construction of the components:

- **symmetrical design shapes**
- **compact installation dimensions**
- **special, reliable functional principles**
- **extra-wide adjustment ranges**
- **fully compatible load ranges and connection dimensions**
- **integrated installation aids**

Moreover, LISEGA hangers feature **only one** upper connection point. Due to this, along with compact and symmetrical design shapes, load distribution free of imposed moments on the connections is ensured and easy installation made possible. The operating position of the moving parts (hangers, supports and snubbers) can be read directly off a linear travel indicator.

Load adjustment of the constant hangers and supports can be carried out at all times, even in the installed condition. Hangers and supports can be blocked **in any travel position**.

2.3 Principle of the optimum design

For the design and arrangement of support components, optimum coverage of the specific support function is the decisive factor. So **only one** design is required **for each function**, namely, the optimum one for the purpose. The project engineer is no longer forced to choose from a range of alternative solutions.

This not only facilitates application but also increases safety. In addition it is a prerequisite for the logical implementation of standardized construction according to the modular system.

- **There's only ONE best solution!**

3. The LISEGA Modular System

3.1 User benefits

The cost of pipe supports is a major factor in the total cost of a pipe system. The cost of the supports is the accumulated total arising from the individual costs of:

- **project management (processing)**
- **design and engineering work**
- **use of material (components) and**
- **installation and assembly work**

Moreover, the pipe supports are almost always critical for the commissioning deadlines and can, through delays in delivery, cause incalculable extra costs.

The goal of the LISEGA product strategy is to achieve optimum user benefits for customers at the lowest cost, following the **economic principle**.

The LISEGA modular system provides the corresponding basis. The standardization of components is the decisive prerequisite for:

- **rational series production**
- **favorable performance/weight ratios**
- **consistently high product quality**
- **ready availability from stock**
- **our special LICAD® design software**

The cumulative benefits from this result in reliable project processing at competitive prices with superior component quality. In addition, the user also benefits from cost reductions in labor-intensive sectors such as support engineering (design) and onsite installation. The assembly procedure for the pipe systems can also be streamlined by **first installing the supports, then mounting the piping directly into them.**

The economic principle:

= with the least possible effort, achieving the maximum possible benefit

= Total Cost Minimum/TCM

3.2 Functionality

The standardization of components at LISEGA is specifically directed toward their systematic interaction as support configurations. To this end, load and travel ranges as well as the geometry of the connections are harmonized. The LISEGA standard support program has been developed in this fashion as a fully functional and effective modular system. The individual components therein form modules and guarantee load compatibility. This enables a wide range of combinations to produce tailor-made support configurations as required. The comprehensive selection of components enables adaptation to widely differing support situations and application conditions.

First install the supports, then mounting the pipes!

Product groups
+ load groups
+ travel ranges
+ connection compatibility

= Modular System

3.3 Product groups

The standardized components are divided into **7 product groups** according to task and function (see standardized components table, page 0.3 and diagram on page 0.4).

3.4 Load groups

To ensure uniform loading in component combinations the product groups are arranged throughout according to clearly classified static and dynamic load groups (see page 0.5 and page 0.6).

Modular System
+ CAD design
+ IT Logistics System

= High-Tech Application

① Metric or UNC according to region of application.

Within a load group (nominal load), all components feature uniform load limits and safety margins. Within a load group the connection dimensions of the components (thread① and pin diameters) are uniform and compatible with the components in other product groups.

As different components can only be combined with each other within the same load group **the stresses on a load chain are consistent throughout**, whereby the clamps are selected in each case according to the relevant temperature, load and insulation thickness of the pipe system.

The incorrect combination of parts from different load groups is thus avoided.

3.5 Travel ranges

3.5.1 Constant and spring hanger travel ranges

Moving components such as constant and spring hangers are split into travel ranges corresponding to the usable spring travel of the standard springs used. The relevant travel range in each case is designated in the type designation by the 4th digit in the following table.

② For spring hangers and supports (product group 2) the springs are pre-stressed to approx. 1/3 of their nominal load. This results in the initial load.

constant hanger				spring hanger			
travel range		designation number		travel range②		designation number	
0 – 2.95 inch	[75 mm]	1 . . 1 . .		0 – 1.97 inch	[50 mm]	2 . . 1 . .	
0 – 5.91 inch	[150 mm]	1 . . 2 . .		0 – 3.94 inch	[100 mm]	2 . . 2 . .	
0 – 11.81 inch	[300 mm]	1 . . 3 . .		0 – 7.87 inch	[200 mm]	2 . . 3 . .	
0 – 17.72 inch	[450 mm]	1 . . 4 . .		0 – 11.81 inch	[300 mm]	2 . . 4 . .	
0 – 23.62 inch	[600 mm]	1 . . 5 . .		0 – 15.75 inch	[400 mm]	2 . . 5 . .	
0 – 29.53 inch	[750 mm]	1 . . 6 . .					
0 – 35.43 inch	[900 mm]	1 . . 7 . .					

3.5.2 Snubber travel ranges

The LISEGA snubbers are grouped into standard stroke ranges denoted by the 4th digit of the type designation as in the following table.

snubbers			
stroke		type	designation number
5.91 inch	[150 mm]	30	3 . . 2 . .
11.81 inch	[300 mm]	30	3 . . 3 . .
15.75 inch	[400 mm]	30	3 . . 4 . .
19.69 inch	[500 mm]	30	3 . . 5 . .
23.62 inch	[600 mm]	30	3 . . 6 . .
29.53 inch	[750 mm]	30	3 . . 7 . .
3.94 inch	[100 mm]	30/31	3 . . 8 . .
7.87 inch	[200 mm]	30/31	3 . . 9 . .

3.6 Standardized components

standardized components			
product group		unit type	unit designation
1	Constant hangers & supports	11	Constant hangers
		12-14	Constant hangers, multi-cell
		16	Constant supports, multi-cell
		17	Servo hangers
		18	Constant hangers, low profile
		19	Constant supports, low profile
		19	Angulating const. supp., low profile
		71	Brackets for constant hangers
		79	Constant hanger trapezes
2	Spring hangers & supports	20	Angulating spring supports
		21	Spring hangers
		22	Heavy duty spring hangers
		25	Spring hangers, seated
		26	Heavy duty spr. hang. (seated)
		27	Sway braces
		28	Heavy duty spring supports
		29	Spring supports
		72	Base plates
		79	Spring hanger trapezes
3	Dynamic components	30	Snubbers
		31	Large bore snubbers
		32	Energy absorbers
		33	Installation extensions
		34	Dynamic pipe clamps
		35	Weld-on brackets
		36-38	Dynamic pipe clamps
		39	Rigid struts
		3D	Viscoelastic dampers
		3L	Shear lugs
		3R	Pipe whip restraints
4	Pipe connecting components	40	U-bolts
		41	Weld-on lugs
		42-44	Horizontal clamps
		45,46,48	Riser clamps
		49	Clamp bases, lift-off restraints
		77	Connection plates
5	Pipe bearings and saddle components, cryogenic clamp bases	51	Cylinder roller bearings
		52	Double taper roller bearings
		53	Double cylinder roller bearings
		54	Weld-on pipe saddles
		54	Pipe saddle with pipe clamps
		55	Lift-off restraints
		56	Cryogenic clamp bases
		57	Cryogenic axial stops
		57	Weld-on pipe shoes
		58	Stanchions
6	Threaded connecting elements	60	Eye nuts
		61	Clevises
		62	Turnbuckles
		63	Hexagon nuts
		64	Rod couplings
		65	Tie rods L/R
		66	Tie rods
		67	Threaded rods / stud bolts
7	Structural attachment elements	70	Sliding components
		73	Weld-on clevises
		74	Weld-on plates with sph. washers
		75	Weld-on eye plates
		76	Beam adapters
		78	Beam clamps
		79	Trapezes

3.7 Modular system for load and connection compatibility

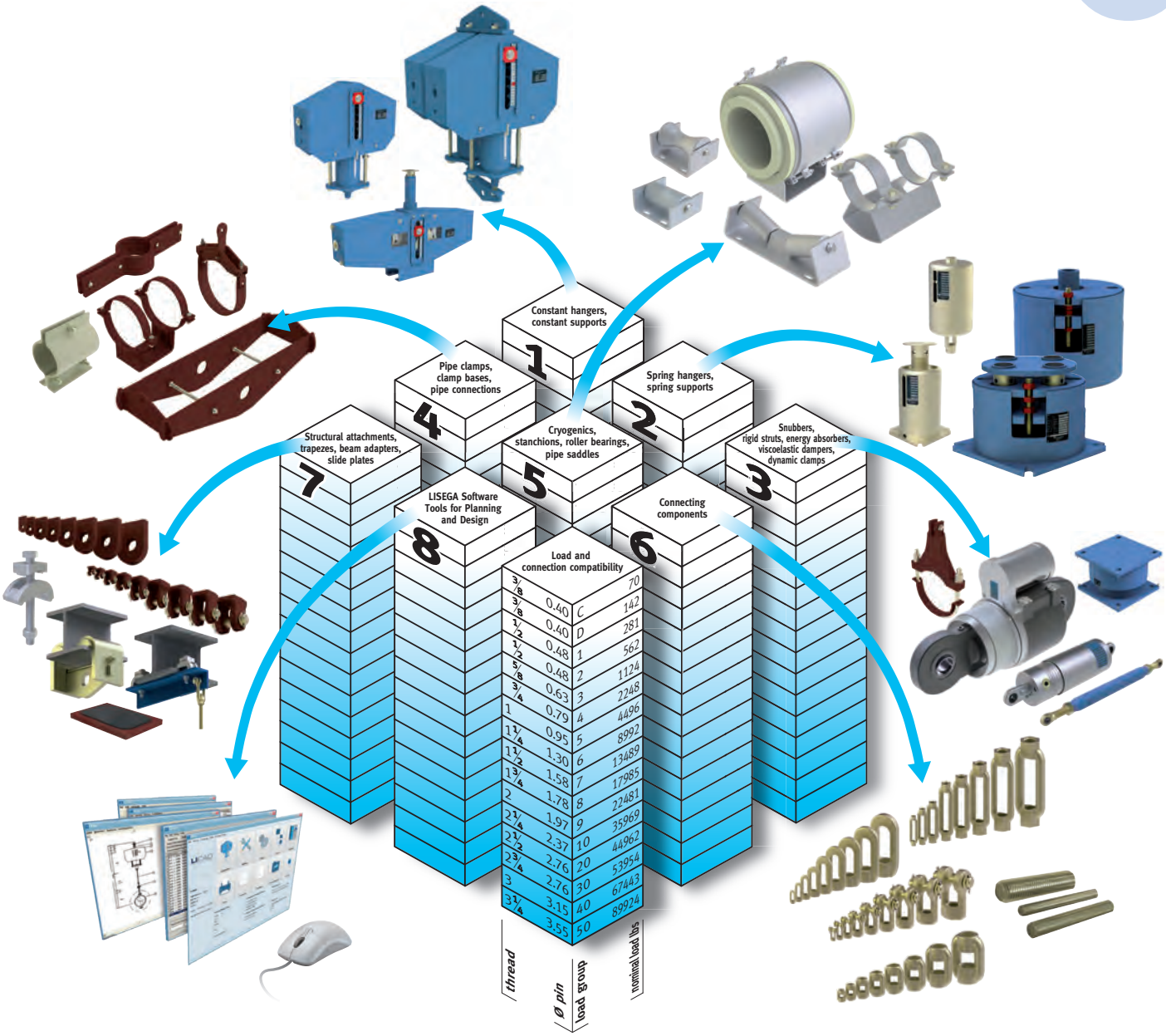

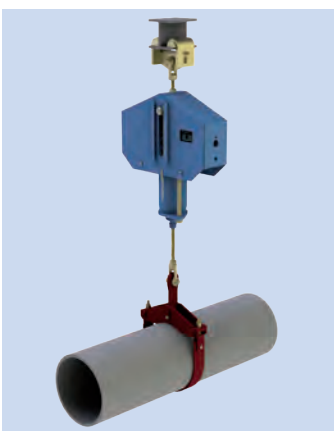

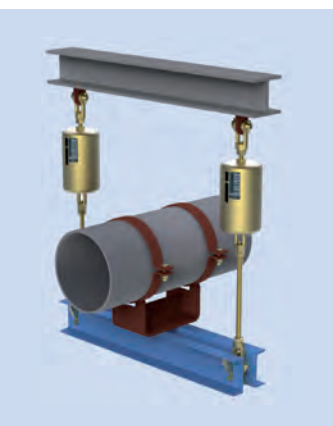

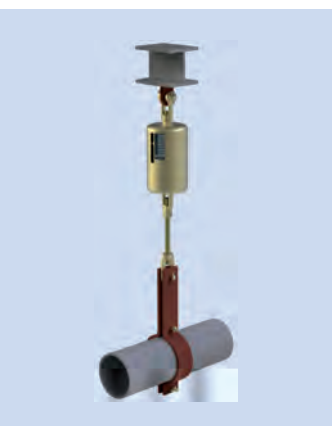

Cold load:
The cold load is the load determined by the pipe system calculations for the support point in shut down condition.

Set load (blocking load):
The set, preset or blocking load is the load at which the spring or constant hanger is set and blocked. The set load is made up of the cold load and the dead weight of the components suspended from the spring or constant hanger. In part, blanket dead weights are already calculated into the cold loads. These must be taken into account when designing the hanger arrangement.

Hot load (operating load):
The hot or operating load is the load acting on the support point during normal operation. For spring hangers it is made up of the set load and the force resulting from spring travel multiplied by spring rate. For constant hangers the hot load corresponds to the set load.

Hydrostatic test load:
The hydrostatic test load is the load acting on the support during pressure testing, in general at 176°F [80°C].

Pickling (and clean) load:
The pickling load is the load distributed from the support points during pickling of the pipe system, in general at 392°F [200°C].

dynamically defined components product group 3		
load group	nominal load [lbs]	ø pin
1	675	0.39
2	900	0.39
3	1800	0.47
4	4000	0.59
5	10350	0.78
6	22450	1.18
7	44900	1.96
8	78600	2.36
9	123500	2.75
10	224000	3.93
20	448000	4.72
30	670000	5.51
40	900000	6.29
50	1124000	7.08

4. Permissible loads

4.1 Statically and dynamically loaded components

For permissible loads we distinguish between statically and dynamically loaded components. The components in product groups **1, 2, 4, 5, 6, and 7** are, according to their function, loaded in only one direction (static or quasi static) and are viewed as **statically determined components**. The units in product group **3** as well as their accessories are regarded as **dynamically determined components.**

4.1.1 Static components

The nominal load is used to denote the load group. For the statically determined components in product groups **1, 2, 6 and 7** the **nominal load** corresponds to the max. **set load** of spring elements such as spring hangers. The **max. operating load** (load case H) is, in the event of use as a rigid support, considerably higher than the nominal load and is adapted to the load capacity of the connection thread. This also includes spring hangers and constant hangers in blocked condition, whereby for **cold loads** in pressure tests (short duration) the emergency loads (load case HZ) can be exploited.

statically defined components product groups 1, 2, 6, 7				
load group	nominal load [lbs]	ø connecting thread	wrench size	ø pin
C	70	3/8	11/16	0.40
D	142	3/8	11/16	0.40
1	281	1/2	7/8	0.48
2	562	1/2	7/8	0.48
3	1124	5/8	1 1/16	0.63
4	2248	3/4	1 1/4	0.79
5	4496	1	1 5/8	0.95
6	8992	1 1/4	2	1.30
7	13489	1 1/2	2 3/8	1.58
8	17985	1 3/4	2 3/4	1.78
9	22481	2	3 1/8	1.97
10	35969	2 1/4	3 1/2	2.37
20	44962	2 1/2	3 7/8	2.76
30	53954	2 3/4	4 1/4	2.76
40	67443	3	4 5/8	3.15
50	89924	3 1/4	5	3.55

4.1.2 Dynamic components

For dynamically loaded components the nominal load corresponds to the operating load for load case H (under normal conditions) or level A/B. (ASME III / RCC-M).

As these components are generally used as safety devices for emergencies, load case HZ or level C (ASME III / RCC-M) are taken as the maximum occasionally occurring load condition. **In any case, the requirements set forth by the responsible project engineer apply.**

4.2 Product group 4

For product group 4 (pipe connections), a corresponding overlapping area in the load groups is taken into account, due to the wide temperature-dependent range of different loads. Data on the permissible loads for pipe-connecting components under consideration of the respective operating temperatures can be taken from the individual selection tables.

The permissible operating loads for long-term operation (load case H (under normal conditions), normal load, level A) are shown here. On higher short-term loading (e.g. hydrostatic tests) no permanent deformation is caused.

The permissible loads in load cases HZ (emergency (occasionally occurring operating conditions), level C) and HS (faulted condition, level D) depend on the codes to be complied with.

examples		
code	load case HZ (emergency)	load case HS (faulted condition)
ASME section III, NF	H x 1.5	H x 1.6
RCC-M	H x 1.33	H x 1.6
MSS SP-58	H x 1.2	no data
DIN EN 13480	H x 1.2	no data
VGB-R 510 L ①	H x 1.15	H x 1.5
KTA 3205.3 ①	H x 1.15	H x 1.5

4.3 Product group 5

The components in product group 5, clamp bases for cold pipe systems, low temperature systems (cryogenic) as well as roller bearings and pipe saddles, are regarded as static, however they are not considered to be part of the modular system with regard to the load group. As they are more comparable with components in secondary steelwork with respect to loading, they form a separate group. The nominal load here corresponds to the max. operating load according to load case H (normal operation conditions level A/B). For product group 5 see also 4.4.3, page 0.6.

① For components according to KTA 3205 qualification test the following applies: HZ = H x 1.5; HS = H x 1.7

4.4 Load tables

The permissible loads of the components are arranged in the form of a matrix (ordered according to load groups and load cases) in the following LISEGA load tables. The definition of the load cases are in line with **DIN EN 13480-T3, VGB-R 510 L, ASME B31.1, MSS SP-58, ASME section III, Div. 1, Subsection NF** and **KTA 3205**. The load table applies uniformly to all components in the LISEGA modular system and to other LISEGA components scheduled for use with standard components such as **special designs**.

4.4.1 Max. permissible load [lbs] for statically determined components

load group	nominal load [lbs] ①	normal operation ③ level A/B ②		upset	emergency ④ level C		faulted condition ⑤ level D	
		176°F	302°F	302°F	176°F	302°F	176°F	302°F
C	70	157	179	157	247	224	314	292
D	142	382	562	494	741	651	966	854
1	281	629	944	831	1258	1124	1618	1438
2	562	990	1505	1350	2025	1800	2990	2700
3	1124	1910	2540	2270	3370	3010	4990	4495
4	2248	3150	5240	4700	6970	6250	9215	8320
5	4496	6070	7645	6745	10340	9215	13710	12365
6	8992	9665	12590	11240	16635	14835	21575	19330
7	13489	14160	18660	16635	24275	21800	31465	28320
8	17985	19110	25620	22925	33715	30340	43825	39330
9	22481	25180	33935	30340	44050	39555	57310	51690
10	35969	40015	49895	44725	66300	59555	85625	77085
20	44962	48330	66750	59780	88700	79780	115065	103605
30	53954	60700	76410	68545	101580	91245	131470	118210
40	67443	71940	85400	76400	113500	101200	146100	131500
50	89924	89924	110100	98900	146100	131500	188800	169700

4.4.2 Max. permissible loads [lbs] for dynamically determined components, product group 3

load group	normal (F_N)/upset ⑥ level A/B		emergency ⑦ level C		faulted condition ⑧ level D	
	176°F	302°F	176°F	302°F	176°F	302°F
1 ⑨	675	650	900	850	1160	1120
2	900	875	1190	1150	1550	1500
3	1800	1680	2380	2180	3070	2800
4	4000	3710	5380	4950	6960	6400
5	10350	9900	13700	13150	17300	16700
6	22450	21200	31000	28000	40400	36400
7	44900	39300	60000	53500	75500	67500
8	78600	76100	106000	95000	147000	132000
9	123500	120000	165000	160000	210000	205000
10	224000	210000	300000	277000	391000	362000
20	448000	426000	597000	566000	773000	734000
30	670000	640000	898000	853000	1159000	1101000
40	900000	854000	1195000	1135000	1545000	1465000
50	1124000	1067000	1495000	1420000	1930000	1830000

4.4.3 Max. permissible loads for roller bearings in product group 5

	permissible loads [lbs]					
normal operating conditions	900	1800	3600	7870	13500	27000
occas. occur. operat. cond.	1235	2470	4945	10560	18000	36000

4.4.4 Max. permissible loads for viscouselastic dampers

	permissible loads [lbs]								
3D .. .. -D	562	1124	2248	4496	6744	8992	13489	17985	22481
3D .. .. -L	1124	2248	3372	5620	8992	11241			

① Max. operating load for spring and constant hanger corresponding to max. load on main springs. The load group allocation does not apply to types 18/19.

② Permissible loads according to design criteria for US standard "MSS SP-58" (ASME B 31.1 / B 31.3).

③ All loads are included here that can possibly occur during conventional operation of the plant, including startup and shutdown, weight tolerances, and hydrostatic tests.

④ Loads falling outside conventional operation are included here, according to the regulations in each case, also hydrostatic tests. Subsequent inspection of the whole support arrangement is strongly advised.

⑤ Due to the loads specified the yield stress of the components can be reached. At all events replacement is recommended.

⑥ All dynamic stresses possibly resulting from plant operation are included here including pressure shock forces from valve operations or possibly from operating basis earthquakes (O.B.E.).

⑦ All dynamic stresses beyond conventional operation and possibly safety shutdown earthquakes (S.S.E.) are included here. Subsequent inspection of the whole support arrangement is strongly recommended.

⑧ For the dynamic loads specified the yield stress of the components can be reached. At all events replacement is strongly recommended.

⑨ Load groups 1 and 2 are compatible regarding load and connections, whereby load group 1 refers to the smallest snubber and load group 2 to the corresponding rigid struts and weld-on brackets.

5. Type designation system

All components can be identified via coded type designations. **6 digits** contain all the information required for description of the **standard design**.

The type designation system is the prerequisite for the use of modern IT and enables the unrestricted integration of the LISEGA modular system into current CAD programs.

The LISEGA type designations can be decoded by way of the following tables.

The 1st digit describes the product group (PG)
PG 1 = Constant hangers and supports PG 2 = Spring hangers and supports PG 3 = Dynamic components PG 4 = Pipe connecting components PG 5 = Pipe bearings and saddle components, cryogenic clamp bases PG 6 = Threaded connecting elements PG 7 = Structural attachment elements

The digits 2 – 6 designate the further characteristics according to the following tables. The design for increased requirements (5th or 6th digit) is described on page 0.18.

PG 1 Constant hangers and supports

2nd digit	3rd digit	4th digit	5th digit	6th digit
design	load group	travel range [in]	field of application	production series
1= constant hanger	C= ⅜ UNC D= ⅜ UNC 1= ½ UNC 2= ½ UNC 3= ⅝ UNC 4= ¾ UNC 5= 1 UNC 6= 1¼ UNC 7= 1½ UNC 8= 1¾ UNC 9= 2 UNC	2= 5.91 3= 11.81 4= 17.72 5= 23.62 6= 29.53 7= 35.43	2= standard 6= standard ‹increased requirements›	3=2013 5=1985 9=1999
2= CH 2 x coupled	8≙LG10 9≙LG20		3= standard 4= standard with brackets 7= standard ‹increased requirements› 8= standard with brackets ‹increased requirements›	5=1985
3= CH 3 x coupled	8≙LG30 9≙LG40			
4= CH 4 x coupled	8≙LG40 9≙LG50			
6= heavy constant support	8≙LG10 9≙LG20	2= 5.91 3= 11.81	2= coupled 2 x	6=with high temp. SE* 7=with PTFE-SE* 9=without SE*
	8≙LG30 9≙LG40		3= coupled 3 x	
	8≙LG40 9≙LG50		4= coupled 4 x	
7= servo hanger	5= 1 UNC 6= 1¼ UNC 7= 1½ UNC 8= 1¾ UNC 9= 2 UNC	2= 5.91 3= 11.81	2= standard 6= standard ‹increased requirements›	5=1985

*SE= sliding element

PG 1 Constant hangers and supports (continued)

2nd digit	3rd digit	4th digit	5th digit	6th digit
design	load group	travel range [in]	field of application	production series
8= constant hanger, short	D= ⅜ UNC 1= ½ UNC 2= ½ UNC 3= ⅝ UNC 4= ¾ UNC 5= 1 UNC 6= 1¼ UNC 7= 1½ UNC 8= 1¾ UNC 9= 2 UNC	1= 2.95 2= 5.91 3= 11.81	3,4= standard	7=2007
9= constant support, short			1,2= standard constant support 3,4= standard angulating constant support	6=with high temp. SE* 7=with PTFE-SE*
9= angulating constant support, short				7=2007

PG 2 Spring hangers and supports

2nd digit	3rd digit	4th digit	5th digit	6th digit
design	load group	travel range [in]	field of application	production series
1= spring hanger suspended	C= ⅜ UNC D= ⅜ UNC 1= ½ UNC 2= ½ UNC	1= 1.97 2= 3.94 3= 7.87 4= 11.81	2= standard 6= standard ‹increased requirements›	1=1991 4=1994 8=1978 9=1999
0= angulating spring support 0= installation extension for type 20 5= seated 7= sway brace 7= installation extension for type 27 9= spr. support	3= ⅝ UNC 4= ¾ UNC 5= 1 UNC 6= 1¼ UNC 7= 1½ UNC 8= 1¾ UNC 9= 2 UNC	5= 15.75 9= installation Extension for type 20 & type 27 & type 29	1= standard 5= standard ‹increased requirements› 2= telescopable spring support 6= telescopable spring support ‹increased requirements›	1=1991 4=1994 6=with high temp. SE* 7=with PFTE-SE* 8=1978 9=1999
2= heavy spring hanger suspended 6= heavy spring hanger seated	1= LG10 2= LG20 3= LG30 4= LG40 5= LG50	1 = 1.97 2 = 3.94 3 = 7.87	1= standard 5= standard ‹increased requirements› 2= standard 6= standard ‹increased requirements›	9=1999
8= heavy spring support				6=with high temp. SE* 7=with PFTE-SE*

PG 3 Dynamic components

2nd digit	3rd digit	4th digit	5th digit	6th digit
design	load group [lbs]	travel range [in]	field of application	production series
0= hydraulic snubber serial version 2= energy absorber 3= installation extension	1= 675 2= 900 3= 1800 4= 4000 5= 10350 6= 22450 7= 44900 8= 78600 9= 123500 0= 224000	2= 5.91 3= 11.81 4= 15.75 5= 19.68 8= 3.94 9= 7.87	1= standard 5= standard ‹increased requirements›	2=2002 3=1993 6=1986 8=1988 at type 32: 6=1996
1= hydraulic snubber large bore	2= 448000 3= 670000 4= 900000 5=1124000 9= 123500 0= 224000	8= 3.93 9= 7.87		
5= weld-on bracket	19= 675 29= 900 39= 1800 49= 4000 59= 10350 69= 22450 79= 44900 89= 78600 99=123500 09=224000 20=448000		1= standard 5= standard ‹increased requirements›	1=1991 3=1993 9=1989

PG 3 Dynamic components (continued)

2nd digit	3rd + 4th digit	5th digit	6th digit
design	pipe diameter load group [lbs]	field of application	production series
6= dynamic pipe clamp with U-bolt	Pipe diameter OD in [mm/10] ⋮ T0=40 inch T1=42 inch T2=44 inch T3=46 inch T4=48 inch	standard 1= up to 660°F 2= up to 930°F 3= up to 1040°F 4= up to 1110°F standard ‹increased requirements› 6= up to 660°F 7= up to 930°F 8= up to 1040°F	1–3= 1 x U-bolt 4–5= 2 x U-bolt
7= dynamic clamp with strap			1–6= 1 x Strap 7–9= 2 x Strap
9= rigid strut	2= 900 3= 1800 4= 4000 5= 10350 6= 22450 7= 44900 8= 78600 9= 123500 0= 224000 Middle installation dimension in [mm/100]		2–4= standard 7–9= ‹increased requirement›
L= shear lug	3rd to 6th digit corresponds to clamp type		

2nd digit	3rd + 4th digit	5th digit	6th digit
design	load [lbs]	travel vertical [in]	travel horizontal [in]
D= viscous-elastic damper	03= 562 05=1124 10=2248 15=3372 20=4496 25=5620 30= 6744 40= 8992 50=11241 60=13489 80=17985 H1=22481	3=1.18 4=1.57 5=1.97	3=1.18 4=1.57 5=1.97
	.. .. ..-D = depend	.. .. ..-L = limit	

PG 4 Pipe clamps, clamp bases and pipe connecting components

2nd digit	3rd + 4th digit	5th digit	6th digit
design	load group pipe diameter [in]	field of application	production series
1= weld-on lug	D9= LGD 29= LG2 39= LG3 49= LG4 59= LG5 69= LG6 79= LG7	1=standard	for straight pipes max. insulation thickness 1=0.39 inch 2=3.97 inch
	01= 0.84 03= 1.33 05= 1.90 07= 2.87 09= 3.50 11= 4.50 14= 5.50 17= 6.63 02= 1.06 04= 1.67 06= 2.37 08= 3.00 10= 4.25 13= 5.25 16= 6.25 19= 7.63	1=standard	for pipe elbows R=1.5NPS max. insulation thickness 1=0.39 inch 2=3.97 inch
horiz. clamp 2= 1-hole 2= 2-hole 3= 3-hole 4= with U-bolt or strap	22= 8.63 26= 10.50 32= 12.75 37= 14.50 42= 16.50 51= 20.00 61= 24.00 71= 28.00 81= 32.00 91= 36.00 T0= 40.00 T2= 44.00 T4= 48.00 24= 9.63 27=10.75 36=14.00 41=16.00 46=18.00 56=22.00 66=26.00 76=30.00 86=34.00 97=38.00 T1=42.00 T3=46.00	standard 1= up to 660°F 2= up to 930°F 3= up to 1040°F 4= up to 1110°F 5= up to 1200°F standard ‹increased requirements› 6= up to 660°F 7= up to 930°F 8= up to 1040°F	depending on load group and design
riser clamp 5= formed riser clamp 6= box clamp for shear lugs 8= box clamp for trunnions			

PG 4 Pipe clamps, clamp bases and pipe connecting components (continued)

2nd digit	3rd + 4th digit	5th digit	6th digit
design	pipe diameter [in]	field of application	production series
9= clamp base	01= 0.84 02= 1.06 03= 1.33 04= 1.67 05= 1.90 06= 2.37 07= 2.87 08= 3.00 09= 3.50 10= 4.25 11= 4.50 13= 5.25 14= 5.50 16= 6.25 17= 6.63 19= 7.63 22= 8.63 24= 9.63 26= 10.50 27= 10.75 32= 12.75 36= 14.00 37= 14.50 41= 16.00 42= 16.50 46= 18.00 51= 20.00 56= 22.00 61= 24.00 66= 26.00 71= 28.00 76= 30.00 81= 32.00 86= 34.00 91= 36.00 97= 38.00 T0= 40.00 T1= 42.00 T2= 44.00 T3= 46.00 T4= 48.00	standard 1= up to 660°F 2= up to 930°F 3= up to 1040°F 4= up to 1110°F 5= up to 1200°F standard ‹increased requirements› 6= up to 660°F 7= up to 930°F 8= up to 1040°F	1= low 2= medium 3= low, welded 4= medium, welded 5= high, welded
0= U-bolt		2= carbon steel 4= stainless steel	8= standard
9= lift-off restraint for clamp base	00= lift-off restraint	0= lift-off restraint	1–5= compon. size

PG 5 Roller bearings, pipe saddles and cryogenic clamp bases

2nd digit	3rd + 4th digit	5th digit	6th digit
design	load group [lbs] pipe diameter [in]	field of application	production series
1= cyl. roller bearing 2= double taper roller bearing 3= double cyl. roller bearing 5= lift-off restraint for roller bearing	04= 900 08= 1800 12= 27000 16= 3600 35= 7870 60= 13500	1= standard 2= movable laterally	9=1989
4= pipe saddle with pipe clamps, weld-on saddle, pipe tray	01= 0.84 02= 1.06 03= 1.33 05= 1.90 06= 2.37 07= 2.87 08= 3.00 09= 3.50 10= 4.25 11= 4.50 13= 5.25 14= 5.50 16= 6.25 17= 6.63 19= 7.63 22= 8.63 24= 9.63 26= 10.50 27= 10.75 32= 12.75 36= 14.00 37= 14.50 41= 16.00 42= 16.50 46= 18.00 51= 20.00 56= 22.00 61= 24.00 66= 26.00 71= 28.00 76= 30.00 81= 32.00 91= 36.00 97= 38.00	1= weldable 2= with pipe clamps 3= support plate	
6= cryogenic clamp base 7= cryogenic axial stop		Length: 3= 5.91 inch 5= 11.81 inch 7= 19.68 inch 8= 29.52 inch	Insulation thickness in inch 0= 0.98 1= 1.57 2= 1.97 3= 3.15 4= 3.94 5= 5.12 6= 5.91 7= 7.09 8= 7.87 9= 9.84
7= weld-on pipe shoe		1= Standard	1= out of T-section 2= out of U-section
8= stanchion		1= rigid pipe supports 2= pipe supports, adjustable	1,2=for str. pipes 3,4=for elbows R=NPS 5,6=for pipe elbows R=1.5NPS

PG 6 Connecting components

2nd digit	3rd + 4th digit		5th digit	6th digit
design	load group		field of application	production series
0= eye nut 1= clevis 2= turnbuckle 4= rod coupling	D9= ⅜ UNC– 142 lbs 29= ½ UNC– 562 lbs 39= ⅝ UNC– 1124 lbs 49= ¾ UNC– 2248 lbs 59=1 UNC– 4496 lbs 69=1¼ UNC– 8992 lbs 79=1½ UNC– 13489 lbs 89=1¾ UNC– 17985 lbs 99=2 UNC– 22481 lbs 10=2¼ UNC– 35969 lbs 20=2½ UNC– 44962 lbs 30=2¾ UNC– 53954 lbs 40=3 UNC– 67443 lbs 50=3¼ UNC– 89924 lbs		2= standard 6= standard ‹increased requirements›	2=1982 5=1995 8=1978 9=1999
3= hex. nut			1= standard 6= standard ‹increased requirements›	3=1993 8=1978 9=1999
5= tie rod L/R 7= stud bolt, threaded rod	D= ⅜ UNC 2= ½ UNC 3= ⅝ UNC 4= ¾ UNC 5=1 UNC 6=1¼ UNC 7=1½ UNC 8=1¾ UNC 9=2 UNC	Length: 0= LG10–LG50 1= stud bolt 2= 2 ft 3= 4 ft 4= 6 ft 5= 8 ft 6= 10 ft 7= 12 ft	2= standard 6= standard ‹increased requirements›	
	10=2¾ UNC 20=2½ UNC 30=2¾ UNC 40=3 UNC 50=3¼ UNC	Length not stand-ardized		

Type designation

1 2 3 4 5 6

- 6 — Production series/travel/variant
- 5 — Field of application/travel
- 4 — Travel range/pipe ø/function
- 3 — Load gr./pipe ø/thread ø
- 2 — Design
- 1 — Product group (PG)

Examples

1 1 5 3 1 5

- 5 — 1985
- 1 — Standard design
- 3 — Travel range 3 / 0-11.81 inch
- 5 — Load gr. 5 / F_N = 4495 lbs
- 1 — Individual design
- 1 — Constant hanger

4 9 5 1 8 5

- 5 — High design, welded
- 8 — 13CrMo4-5, increased requirements
- 1 — Pipe diameter 20 inch
- 9 — Clamp base
- 4 — Pipe connection

3 9 6 2 5 4

- 4 — Standard design
- 5 — Medium length 98.42 inch
- 2 — Load group 6 / F_N = 22450 lbs
- 6 — Rigid strut

PG 7 Structural attachments and trapezes

2nd digit	3rd digit	4th digit	5th digit	6th digit
design	load group	function	field of application	production series
0= sliding elements	Width 1= 1.97 inch 2= 3.94 inch 3= 5.91 inch 4= 7.87 inch	Length 1= 1.97 inch 2= 3.94 inch 3= 5.91 inch 4= 7.87 inch 6=11.81 inch 7=15.35 inch 8=19.29 inch	1= welded 2= bolted, hot dip galvanized 3= bolted, hot dip galvanized	1= rectangular, up to 302°F 4= rectangular, up to 660°F
	05=ø 1.97 08=ø 3.35 10=ø 3.94	13=ø 5.12 17=ø 6.69 20=ø 7.87		2= round, up to 302°F 5= round, up to 660°F
1= support bracket for constant hanger	C...9= load group	2= 5.91 inch 3= 11.81 inch 4= 17.72 inch 5= 23.62 inch 6= 29.53 inch 7= 35.43 inch	6= standard 8= standard ‹increased requirements›	1= single support
1= support bracket for heavy constant hanger	8=35969 lbs 9=44962 lbs			2= coupled 2 x
	8=53954 lbs 9=67443 lbs			3= coupled 3 x
	8=71939 lbs 9=89924 lbs			4= coupled 4 x
2= base plate for spring hanger	D...9= load group	1, 2, 3, 9= dep. on design	2= standard 7= standard ‹increased requirements›	8= 1978
3= weld-on clevis 4= weld-on plate 5= weld-on eye plate	D...50= load group	0 > load group 9	1= standard 2= type 76 with lift-off-restraints 5= standard ‹increased requirements›	2= 1982 3= 1993 9= 1989
6= beam adapter & combi-nations	D...4= size	2= beam adapter & bolts		1= 2001
	C...2= size	1= cantilever		6= vertical connection 7= horizontal connection
	00=guide			1...4= size
8= beam clamp	2..7= load group	1= standard		1= 1991
9= constant hanger trapeze	3rd to 5th digits correspond to single hangers in each case (see PG1)			3= 2013 5= 1985 7= 2007
9= spring hanger trapeze	3rd to 5th digits correspond to single hangers in each case (see PG2)			1= welded unit 9= with individual hangers
9= rigid trapeze	C...4= load group	2,3= depending on design type	3= standard 8= standard ‹increased requirements›	7= L-section
	2...9= load group			9= U-section, centric connection
	2...20= load group	0 > LG9		4= U-section
7= connecting plate	3rd to 6th digit correspond to the clamps to be coupled			

4 4 6 1 4 8

- 8 — Strap clamp for heavy loads
- 4 — Material 10CrMo9-10 standard design
- 1 — Pipe diameter 24 inch
- 6 — Horizontal clamp, U-bolt or strap
- 4 — Pipe connection

Worldwide coverage of recognized standards

6. Standards and codes

In design, in stress and load calculations, as well as in production, the relevant European and other international standards are taken into account.

The material characteristics upon which all design calculations are based are taken from the relevant standards and technical codes.

the following codes apply:		
DIN EN 13480-T3	Metallic industrial pipe systems	Europe
VGB-R 510 L	Standard supports	Germany
KTA 3205.1/2/3	Nuclear regulations	Germany
AD-Merkblätter	Pressure vessels working group	Germany
RCC-M	Specifications for pipe supports	France
MSS SP-58	Pipe supports – material and design	USA
ANSI ASME B31.1 / B31.3	Pressure piping systems	USA
ASME section III Div. I - NF	Supports for nuclear components	USA
JSME S NC1	Nuclear design code	Japan
JEAG 4601	Nuclear design guide	Japan
SPIR-O-2008	Supports for nuclear plants for AES-2006	Russia

7. Materials

Materials are exclusively used that conform to DIN-EN, ASTM or CN steel material requirements.

As a matter of course only materials of guaranteed strength characteristics are used for the support components.

Preferred materials for pipe connections

Standardized selection of carbon steels and heat-resistant materials!

			temperature of medium in °F						
DIN-EN	ASTM	CN-Steel	≤660	≤840	≤930	≤985	≤1040	≤1110	≤1200
S235JR	A 36	Q235B	x						
S235JR	A 516 Gr. 60		x						
S235JR	A 675 Gr. 55		x						
S355J2	A 675 Gr. 70	Q345B/Q345R	x						
S355J2	A 299	Q345B/Q345R	x						
S355J2	A 516 Gr. 70	Q345B/Q345R	x						
P235TR1	A 53 S Gr. A	20G	x						
P235GH	A 53 S Gr. A	20G	x						
P355NH	A 106 Gr. C	20G	x						
16Mo3	A 204	(Q345R)/15CrMoR	x	x	x				
13CrMo4-5	A 387 Gr. 12 Cl.2	15CrMoR	x	x	x	x	x		
10CrMo9-10	A 387 Gr. 22 Cl.2	12Cr1MoVR/12Cr2Mo1R	x	x	x	x	x	x	
X10CrMoVNb9-1+NT/QT	A 387 Gr. 91 Cl.2		x	x	x	x	x	x	x
X5CrNi18-10	A 240 TP 304	06Cr19Ni10	x	x	x	x			
42CrMo4+QT	A 193 B7	42CrMo	x						
	A 193 B8		x	x	x	x	x	x	x
X10CrMoVNb9-1+NT/QT	A 182 F91		x	x	x	x	x	x	x
21CrMoV5-7+QT		25Cr2MoVA	x	x	x	x	x		
25CrMo4+QT	A 194 Gr. 2H	25Cr2MoVA	x	x	x	x	x		

High temperature resistant materials for use at higher temperatures or cold tough materials e.g. until –76°F on request.

8. Welding

All welding is carried out as gas metal arc welding under protective gas according to DIN EN ISO 4063.

- **MAG/GMAW (= gas metal arc welding), Procedure no. 135**
- **MAG/FCAW (= flux core arc welding), Procedure no. 136**
- **WIG/GTAW (= gas tungsten arc welding), Procedure no. 141**

For these procedures (welding procedure specifications (WPS)) are on hand which are certified on the basis of the EN ISO 15614-1 and / or ASME section IX (WPQR).

The welders are qualified according to EN 287-1 and ASME section IX for the corresponding procedures and material classes, and the service personnel for welding equipment according to EN 1418 and ASME section IX.

LISEGA holds certifications according to:

- **DIN 18800-T7 Kl. E, recertification according to EN1090-1 – EXE 4 conformity certification for support components and EN 1090-2 Technical regulations for the execution of steel construction**
- **ASME section III Div. I Subs. NCA 4000 – NPT and NS stamp**
- **EN ISO 3834-2**
- **TRD 201/AD 2000 Leaflet HPO**
- **Technical Regulations for Steam Boilers/ Manufacture and inspection of pressure vessels by the German TÜV**

The current welding inspection team is qualified according to:

- **EN ISO 14731, welding engineers IWE and EWE (International/European welding engineer) and welding technicians, IWS (International Welding Expert)**
- **Certified welding inspectors according to AWS 1.1**
- **ASME section III Div. I Subs. NF-5500**
- **SNT-TC-1A**

Non-destructive testing VT, PT, MT, UT and RT (external) is conducted by test personnel qualified according to standards ISO 9712 Level II and SNT-TC-1A Level II. Supervision is carried out by personnel qualified according to ISO 9712 Level III and SNT-TC-1A Level III.

The tests are conducted on the basis of regulations:

- **EN ISO 5817 Assessment Group C**
- **EN ISO 17635 (ISO 10836) with relevant stipulations for the various ZfP procedures**
- **RCC-M Subs. H 4000 with MC 3000 – MC 7000**
- **ASME section V as required by subsection NF**

9. Surface treatment against corrosion

As a matter of principle, LISEGA products are designed for long-term operation, functioning reliably for the whole life of the plant. To limit maintenance work, particular attention is paid to protection against corrosion. It is important to specify the type of surface treatment for the environmental conditions prevailing. LISEGA offers a range of suitable corrosion protection systems based on the corrosivity categories and protection periods of EN ISO 12944:

- **Standard surface protection (9.1)**
- **Increased surface protection (9.2)**
- **Hot dip galvanized version (9.3)**
- **Surface protection for extreme applications (9.4)**

Wherever technically feasible, LISEGA uses low-solvent, environmentally friendly, "water-borne" paint finishes.

9.1 Standard corrosion protection

As protection against corrosion, the surfaces of LISEGA products are treated with high-quality protection systems. Our standard corrosion protection corresponds to the **Corrosion Category C3, medium protection period (M) according to EN ISO 12944** and is well suited to implementation in environments with a moderate industrial atmosphere. Typical fields of application in this regard are the interiors of production workshops with increased levels of humidity and dust or exteriors with a normal atmosphere.

Data on specified coat thicknesses correspond to NDFT (Nominal Dry Film Thickness) according to DIN EN ISO 12944, measured according to DIN EN ISO 2808.

9.1.1 Standard paint finish

Metallic surfaces of carbon steel exposed to the open air receive **shotblasting to SA 2 ½** (SP10 according to ASTM) and then a base of **zinc-rich primer 2.36mil [60µm]** is applied. After curing an additional **top coating 2.36mil [60µm]** is applied. The total dry film thickness of the coating amounts to **4.72mil [120µm]**, color shade RAL 5012 – light blue.

Components falling into this category are constant hangers and supports, heavy spring hangers and supports, trapezes, installation extensions for snubbers etc., rigid strut tubes and viscoelastic dampers.

9.1.2 Cathodic electrophoretic dip coating of springs (CED)

High quality helical coil springs are an important element in LISEGA constant and spring hangers. Due to their exposed functional significance, all springs are treated with a cathodic electrophoretic dip coating (CED). The springs are shot-blasted and zinc-phosphated on their extended or peeled surfaces. Finally, a dual-component epoxy resin coating is applied in a galvanic process and baked at approximately 392°F [200°C].

9.1.3 Electro galvanizing

Spring hangers and spring supports, beam clamps and all threaded components and internal functional parts of the constant hangers and supports are galvanized with a coating thickness of approximately **0.47–0.59mil [12–15µm]**.

9.1.4 Hot dip galvanizing

Roller bearings, pipe saddles and cold-block clamp bases are treated as standard with hot dip galvanization, coat thickness **2.36–3.15mil [60–80µm]**.

9.1.5 Primer coating

Due to their special installation situation, mainly within the insulation, the pipe-surrounding components such as pipe clamps and clamp bases, weld-on brackets, weld-on eye plate, weld-on clevises, weld-on bearings and weld-on pipe supports (stanchions) are treated to higher quality transport protection with a weldable primer coating on a shot-blasted surface, coat thickness approximately **1.18mil [30µm]**, color shade red brown.

9.1.6 Snubbers

Snubbers are manufactured completely from corrosion resistant materials and require no special coating.

The separate connection lugs of type 30, are manufactured from carbon-steel, and treated according to 9.1.7.

9.1.7 Snubber connections

Connecting lugs are electro galvanized according to 9.1.3 and fitted with corrosion-protected ball bushings. Installation extensions are treated with the standard paint coating according to 9.1.1. Weld-on brackets are given a weldable primer coat according to 9.1.5 and the connection pins are of stainless steel.

9.1.8 Rigid struts

The rigid strut tubes are given a standard color coating (9.1.1). The ball bushing joints are electro galvanized (9.1.3) and fitted with corrosion-protected ball bushings. Weld-on brackets are treated with a weldable primer coating (9.1.5), while the connecting pins are stainless steel.

9.2 Increased corrosion protection

Increased corrosion protection according to **EN ISO 12944, Corrosivity Category C4, medium protection period (M)**, is recommended in aggressive atmospheres, such as in the open in industrial areas and in coastal regions with moderate saline exposure or in the case of internal applications in chemical plants.

Increased corrosion protection is ensured through corresponding additional measures for surface treatment according to 9.2.1 to 9.2.5 on the basis of the standard treatment.

9.2.1 Increased corrosion protection for carbon steel surfaces

Painted surfaces corresponding to the standard version (9.1.1), such as constant hangers and supports, support brackets, trapezes, installation extensions, rigid strut tubes and viscoelastic dampers are topcoated with an additional coat of **2.36mil [60µm]** on an already existing coat of **4.72mil [120µm]**, so that a specified coat thickness of **7.09mil [180µm]** is achieved, color shade RAL 5012–light blue.

Functional components lying within the constant hanger bodies are also treated according to corrosivity category C4, medium protection (M), in line with EN ISO 12944.

9.2.2 Increased corrosion protection for electro galvanized surfaces

Surfaces electro galvanized as standard according to 9.1.3, such as spring hangers and supports, are given a layer of adhesion primer of **1.57mil [40µm]** thickness plus a topcoat of **2.36mil [60µm]** to create a total layer thickness of **4.53mil [115µm]**, color shade RAL 5012–light blue.

Threaded parts from product group 6 are not given additional surface coats and can if required be supplied hot dip galvanized.

9.2.3 Increased corrosion protection for spherical bearings

The connecting elements of rigid struts and snubbers receive a special coating containing zinc and aluminum lamellas with an additional organic topcoat, layer thickness approx. **0.79–0.98mil [20–25µm].**

9.2.4 Increased corrosion protection for LISEGA helical coil springs

On top of the standard CED coating according to 9.1.2 a supplementary paint layer with a specified thickness of **2.36mil [60µm]** is applied.

Threaded parts and boltings of the straps, plates, U-bolts and clamps of the pipe-surrounding components must, for increased corrosion protection and a working temperature over 660°F [350°C], be located within the insulation in accordance with the installation instructions.

The pin connection of pipe clamps and the end plates of the LISEGA vertical clamps with the adjoining components of the product group 6 must be located outside the insulation.

9.3 Hot dip galvanized version

As an alternative to 9.2, all components in the LISEGA product program can also be supplied as hot dip galvanized version or, where this is not suitable for technical reasons, made from corrosion resistant materials. Components receive a hot dip galvanized coating of approx. **2.36–3.15mil [60–80µm]**. Internal functional components, threads, small parts etc. are hot dip galvanized by spin coating and have a thickness of approximately **1.57mil [40µm].**

For components not suited to hot dip galvanization due to the material used or the application area, the version 'Increased corrosion protection C4' corresponding to 9.2 represents a good alternative.

9.3.1 Constant hangers and supports, product group 1

If required, constant hangers and supports can be supplied hot dip galvanized. When ordering it should be stated whether corrosion protection C3 according to 9.1 is sufficient or C4 according to 9.2 is required. The difference consists in the additional treatment of the inner functional components.

9.3.3 Pipe clamps and clamp bases, product group 3 and 4

Pipe clamps and clamp bases for an application range up to 660ºF can, if required, be supplied hot dip galvanized.

9.3.4 Components in product group 5

Roller bearings, cryogenic clamp bases and pipe saddles are supplied in hot dip galvanized versions as a standard.

9.3.5 Components in product group 6

Connecting rods and other connecting components, tie rods and threaded rods, threaded clevises, threaded eye nuts, turnbuckles and couplings can be supplied ex stock in hot dip galvanized versions.

9.4 Surface protection in extremely aggressive atmosphere

For use in extremely aggressive atmospheres such as e.g. seawater, offshore or aggressive chemical vapors, well-tested corrosion protection systems suitable for all conditions or correspondingly high corrosion resistant materials can be supplied.

10. Operational behavior

10.1 Function

10.1.1 Constant hangers / supports

Constant hangers and constant supports of the product group 1 are designed, so that in theory, minimum load deviation occurs over the whole operating range. The total deviation arising from springs, bearing friction and production tolerances is restricted to ±5% in series production. Load adjustment is made to an accuracy level of 2%.

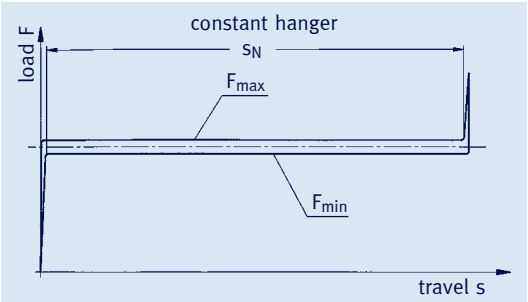

F_N = nominal load
F_{min} = minimum load (upward travel)
F_{max} = maximum load (downward travel)
s_N = nominal travel (incl. reserve)

10.1.2 Spring hangers / supports

For spring hangers and spring supports in product group 2 the load changes linearly in line with the spring travel. The deviation of the spring hysteresis from theoretical values, which results from spring hysteresis and production tolerances, amounts to less than ±5% within the operational travel.

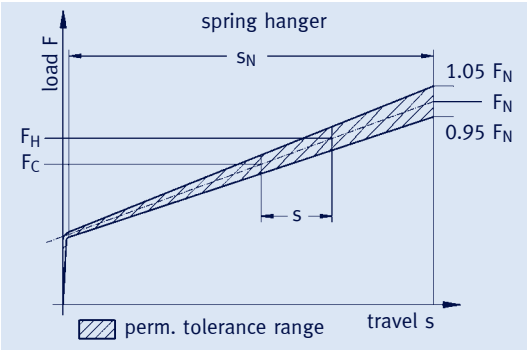

F_N = nominal load
s_N = nominal travel (incl. reserve)
F_H = hot load a (operating load) for downward operational travel
F_C = cold load a (installation load)
s = operational travel

10.1.3 Snubbers

Snubbers are designed, in the event of an impact load between the component to be secured and the building structure, to produce an instantaneous rigid connection. Slow displacement due to thermal expansion must not be resisted. Hence the locking mechanism that blocks the component reacts to velocity. The individual functional data are specified in section 3, page 3.7.

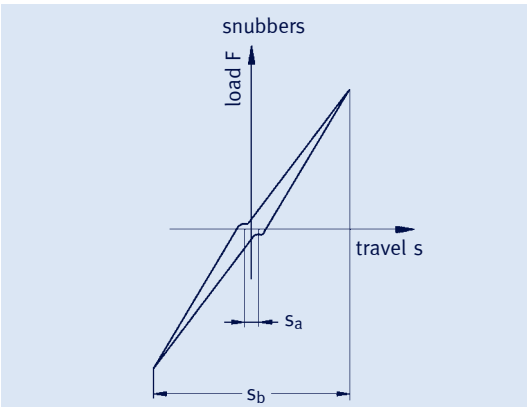

s_a = piston rod tolerance
s_b = piston rod travel

10.1.4 Viscoelastic dampers

Viscoelastic dampers are employed to reduce operational vibrations from machines or plant components to a harmless level by means of broadband damping. The kinetic energy is thereby transformed into heat via a viscous mass. The damping resistance in all degrees of freedom is decisive for its effectiveness. The individual functional data are specified in section 3, page 3.13.

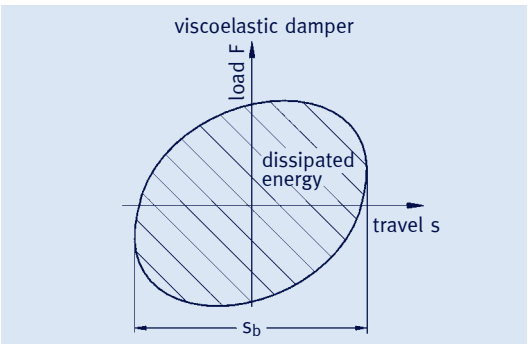

s_b = operational stroke

10.1.5 Slide plates

Slide plates are used to reduce the lateral forces produced by the change in position of the sliding bearing-points. In the LISEGA slide plates, low-friction materials are used with self-lubricating characteristics that reduce friction forces by up to 2/3 at an operating temperature of max. 660°F [350°C]. The individual design data are given in section 7, page 7.10.

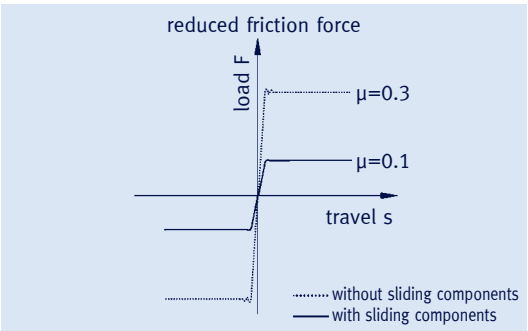

Reduction in reaction forces in the piping system by the use of slide plates.

10.2 Spring relaxation

When under loading and depending on time and temperature, standard helical compression springs lose a considerable amount of their internal stress through relaxation or settling loss. If no special measures are taken to counter this, in constant and spring hangers, it can in the long-term lead to a reduction of more than 10% in the set ultimate load.

In contrast to common practise, LISEGA **exclusively** uses specially treated springs that exhibit practically no relaxation.

In these springs the expected settling loss is anticipated through hot setting. This method is called **prerelaxation**.

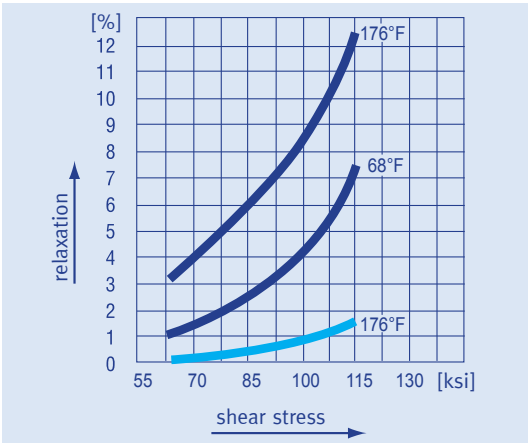

Relaxation behavior of helical coil springs

cold set helical coil springs (loosely based on DIN 2089)

LISEGA hot set helical coil springs, qualified by the KTA qualification test and VGB type tests

11. Connection dimensions

11.1 Installation dimension E

For the simple determination of the required rod lengths in load chains, the installation **dimension E** is specified for all components apart from tie rods and threaded rods (product group 6).

This E dimension denotes the respective installation length of the components minus the thread engagement depths (X dimensions) of the connecting tie rods and threaded rods.

The length of the rods required is given by the total installation height (pipe axis to reference edge of connection surface) minus the sum of the E dimensions of the components to be connected.

To determine the total length of the rods in a load chain all the E dimensions are added together. The sum is compared with the total installation dimension. If a difference results which is greater than the sum of the thread engagement depths (X dimensions), then the chain selected is correct for the total installation height.

For load chains solely with pinned connections the **minimum installation dimension** results from the sum of all E dimensions.

Product-related details are to be found in the selection tables.

Simple method for checking the installation possibilities with the E dimension!

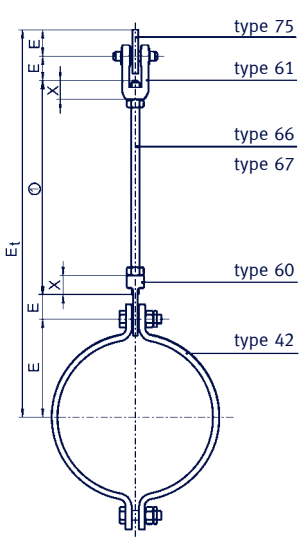

X = Thread depth
E_t = Total installation dimension ($E_t = E_{total}$)
① = Length adapted to individual installation conditions

components (extract)	reference basis for installation dimension "E"
product group 1 constant hangers constant supports servohangers	• upper starting position (0 on travel scale) • on deviation in blocking position to the new blocking position is also to be considered
product group 2 spring hangers	• upper starting position (0 on travel scale) • on deviation in blocking position the blocking position is also to be considered
spring supports (without type 29 .. 2.)	• upper starting position (0 on travel scale) • independent of blocking position due to adjustment available in the support tube
product group 3 snubbers	• specification of "E min" and "E max" corresponding to possible travel • for installation instructions the planned installation position incl. travel reserves is to be taken into account
viscoelastic damper	• middle position
product group 4 pipe clamps	• distance from pipe axis to pin connection or bottom of clamp bases
product group 6 threaded connections	• middle line of pin or lower edge of thread engagement depth up to upper edge of thread engagement depth
product group 7 structural attachments	• middle line of pin up to face of structure

11.2 Regulation of total installation length

11.2.1 Turnbuckle function of connection threads

For length adjustment in installed condition (setting pipe installation position, creating force-fitting) the lower connections on the constant and spring hangers are designed to function as turnbuckles. In this way convenient future adjustment of installation lengths (connecting rods) is ensured. The length adjustment amounts to:

- **11.81 inch [300mm] for constant hangers type 11**
- **5.91 inch [150mm] for constant hangers type 18**
- **the adjustment possibilities of a type 62 turnbuckle for spring hangers type 21**
- **min. 5.51 inch [140mm] for spring hangers type 22**
- **for spring hangers types 25 and 26 the load-bearing rods are led through the weld-on support tube and held by an adjusting nut. Adjustment can be made within the scope of the available thread length of the rods.**

All connecting threads are right-hand.

11.2.2 Constant and spring supports

For types 19, 16, 28, and 29, the installation height is adjustable independently of the respective presetting by using the threaded support tube designed as a spindle. The necessary load is reached during installation by the turning of the threaded support tube.

11.2.3 Turnbuckles type 62, tie rods L/R type 65

For rigid hangers with short installation lengths a defined reserved length for connection components types 60 and 61 usually enables sufficient length adjustment. For greater installation lengths the use of a turnbuckle L/R type 62 in combination with a tie rod L/R type 65 is recommended for the purpose of simpler adjustability. For easy accessibility this combination should always be placed at the lowest end of the load chain.

11.2.4 Rigid struts type 39

The connections for the rigid struts type 39 are supplied as standard as right/left fine thread for length adjustability in installed condition. Flat faces on the rigid strut body enable easy adjustment with an ordinary wrench.

Further instructions are given in the corresponding installation instructions.

12. Quality Management and IMS

For the effective management and supervision of the organization (Corporate Governance) the **Integrated Management System (IMS)** summarizes in a centralized structure the established methods and regulations in the company for observation of the demands in the main sectors.

The IMS covers the areas:

- **fundamental company principles**
- **quality management**
- **environmental protection**
- **work and health protection**
- **organizational procedures**
- **international export certification**

Through the utilization of synergies and the pooling of resources, lean and effective management is possible. In IMS the data from the various systems are gathered, analyzed and evaluated centrally according to the requirements of modern **CAQ (Computer-aided quality)** solutions. The system takes into account recognized standards and guidelines including the corresponding reporting system. Relevant approvals from authorized bodies can be found in the table on page 0.18.

12.1 Quality management

Our quality management (QM) monitors and regulates all activities affecting quality in the company. The independent QM department is the leading system in IMS and has overall supervision of the clearly targeted function of the processes integrated into IMS and the observation of rules and regulations.

One of the most important corporate principles at LISEGA is superior product quality, a vital element which also encompasses the activities and close partnership with our business partners. The organization and behavior of our personnel are correspondingly attuned to this.

The particular measures ensuring quality undertaken by QM are outlined in the **quality management program (QMP)**, which covers the whole organization. These measures and activities to promote quality are an integral component in the processing cycle and are firmly rooted in the procedures.

Constructive devices available for the subsequent adjustment of installation lengths!

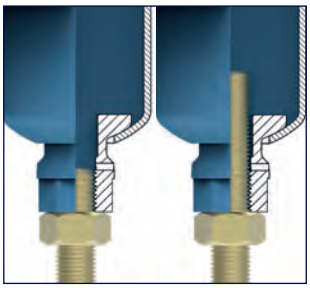

Constant hanger type 11

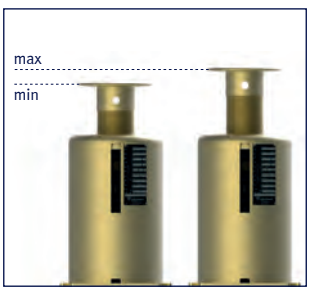

Spring support type 29

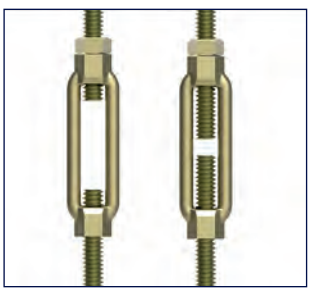

Turnbuckle type 62

Rigid strut type 39

The QMP, as an integral component, forms an entity with the processing cycle!

Following international codes and standards, the QMP is described in detail in the **Quality Management Manual (QMM)**. The QMM takes into account all the recognized European and other international standards, especially **DIN EN ISO 9001** and **ASME section III Div. 1 Subs. NCA 4000** including **Subs. NF** and **KTA 1401, RCC-M H**.

The QMM covers the whole organization of the LISEGA Group and is applied generally both in the conventional sector as well as in areas with **increased requirements**, such as the **nuclear industry**. The scope of the traceability of material, and testing the corresponding documentation can also be adapted exactly to special demands by the activation of further verification levels. All international requirements, including those affecting the nuclear field, can be covered by the QMM. The relevant approvals are available and are regularly renewed.

12.2 Raw material and goods reception

All the materials used are monitored by way of a receiving inspection check by quality management regarding compliance with the technical specifications. The materials used are, according to requirements, certified by material test approvals according to ASME and DIN EN 10204.

12.3 Production supervision

The supervision of production is carried out through constant quality control according to QMM. In particular, for nuclear applications the international quality stipulations according to the codes ASME section III NF / NCA 4000 (USA), RCC-M section H (FR), KTA (DE), DIN EN 13480-T5 and NNSA (CN) are fulfilled.

12.4 Final inspection

Before shipment, constant hangers and spring hangers, as well as snubbers and dampers are subjected, under the responsibility of Quality Management, to function tests on special test benches. The measurement and testing is performed with correctly calibrated test and measurement equipment. The measurements are recorded and can if required be accessed and documented. All the testing faculties are regularly inspected and checked by qualified personnel according to EN ISO 7500-1.

12.5 Documentation on delivery

If required, the materials used are documented by certification via material tests according to ASME and DIN EN 10204. In addition, the results of the functional test can be confirmed by the issue of an acceptance test certificate, also by an independent test institute if so desired. Computerized verification in line with special requirements and special quality-related documents can be agreed upon between customer, producer and supervisor.

13. Suitability tests, type tests

For the use of serially produced standard supports in industrial piping installations, especially in plants with more stringent requirements, e.g. nuclear power stations, special suitability and type tests are required worldwide. The test programs specified mainly involve the following steps:

- **inspection of the quality management program**
- **inspection of the materials used**
- **inspection of the design documentation**
- **verification of the computer-based tensile stress values**
- **experimental testing on**
  - **function**
  - **overload capacity**
  - **continuous load capacity**

On successful testing, suitability is regarded as proven and general approval can be issued for use in industrial piping installations.

Type and suitability tests have been carried out for the major part of the LISEGA product range by the various German and international, independent institutions. They therefore also comply with the requirements of current European codes.

- **DIN EN 13480–T3 Section 13**
- **RCC-M H5300, H5400**
- **KTA 3205.3**
- **VGB-R 510 L**

Certifications can be supplied upon request.

14. Standard version and increased requirements

Our standard supports are absolutely equal in design and function for both the conventional market and where increased requirements are concerned, e.g. in the nuclear field. Hence they do not differ in design or construction. However, due to additional quality assurance requirements and materials with supplementary certification in these sectors, a separate production process may be required.

For areas with increased requirements, all components right up to the finished product must be traceable through batch restamping and the units themselves identifiable according to KTA and ASME codes. In the type designation the increased requirement level is indicated in the 5th digit and for rigid struts in the 6th digit. The relevant component documentation refers to this and to the number of the production order.

In this catalog the standard component, i.e. the one for conventional applications, is identified by the type designations. As the functional data and component dimensions specified are identical to the increased requirements version, in all cases the selection of products can be made using the catalog. **However, when planning or ordering, it is important to verify the part number associated with the requirement level.**

The order examples on the individual data sheets should be noted. The type code under Sect. 5 (pages 0.7 and 0.8) can also be used for this.

Separate production processes of components meeting increased requirements for the traceability of certified materials!

the most important certifications in the LISEGA Group

certification code	certifing body	certification No. ①
ISO 9001	TÜV Nord BSI TÜV Rheinland AFAQ LRQA TÜV Nord	78 100 034445 FS 557331 01 100 038965 1996 / 5030.4 MEA6011026/1 07 100 010963
EN 1090-1:2009/A1:2011	TÜV Nord	0045-CPR-1090-1.00151 TÜVNORD.2013.003
Cl. E; DIN 18800-7:2008-11, DIN 18801	TÜV Nord	DIN 18800-7 / 0513-EW /13/0
AD 2000 Leaflet-HP0	TÜV Nord	07-203-1282-HP-0513/13
DIN EN ISO 3834-2	TÜV Nord	07-204-1280-HS-0513/15
BS OHSAS 18001:2007 „Safety management“	TÜV Nord AFAQ	78 116 034445 2010/38940.1
DIN EN ISO 14001:2009 „Environmental“	TÜV Nord	78 104 034445
SCC	TÜV Nord	78 106 034445
ASME section III Div. I NCA 4000 NS - Certificate for supports	ASME	N 3092 N 3025
ASME section III Div. I NCA 4000 NPT - Stamp for supports	ASME	N 3169 N 2951
KTA 1401	VGB, EnBW Kernkraft, RWE, E.ON, Vattenfall	
NNSA Designing NNSA Manufacturing	China National Nuclear Safety Administration	1405 1406
TN VED / Rostechnazor	Federal Service for Ecological, Technological and Atomic Supervision	PPC 00-043746
GOST R	RST Expert	РОСС DE.АГ80.Н02052 РОСС DE.АГ80.Н02053 РОСС DE.АГ80.Н02054
SPIR-O-2008	ATT=Atomic Techno Test	РОСС RU.0001.01АЭ00.00.10.2849
SSMFS 2008:13	INSPECTA NUCLEAR AB	5477
ASME section III Div. I, Subs. NF Class 1, 2, 3, MC, ASME section XI	Tractebel Belgium	3365

① At the time of publication. Current certificates can be downloaded from our website.

Piping can only be as good as its supports!

15. Form of shipment

Unless specified otherwise, all products are classified according to component types and shipped in appropriate packaging for transport or for short-term storage. They are clearly marked and, if necessary, protected against corrosion by special measures. If long-term storage is required, different packaging can be agreed on for this purpose.

Specific requirements can, where applicable, be found in the data sheets or installation instructions. Complete pipe supports (load chains of different components) can on request be pre-assembled, bundled, and labeled.

16. Warranty

For all LISEGA components a 2-year warranty is issued from date of commissioning, limited to 3 years after transfer of ownership.

17. Technical modifications

Modifications in the interests of further technical development as well as deviations for technical reasons in the dimensions, loads and weights in the range of the selection tables are expressly reserved. Dimensions are often used as maximum dimensions for clash tests. If required, the exact manufacturing dimensions can be provided.

Constant hangers, constant supports

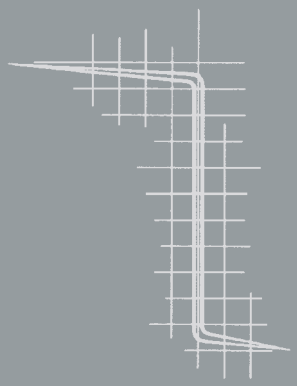

PRODUCT GROUP 1

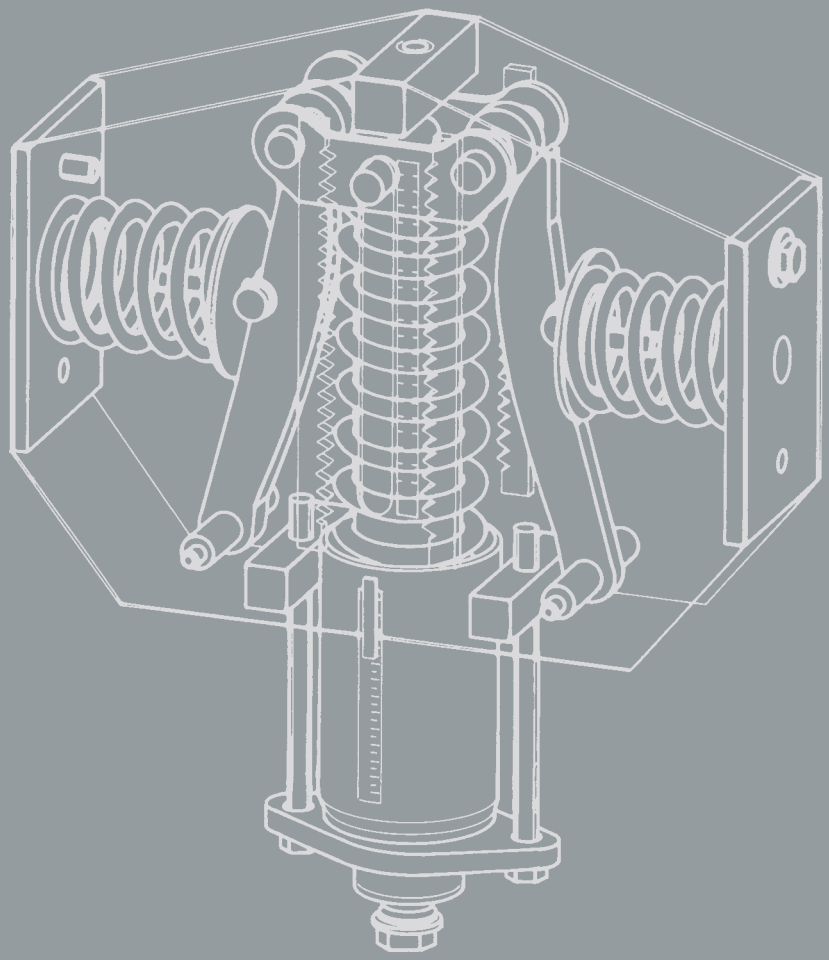

LISEGA

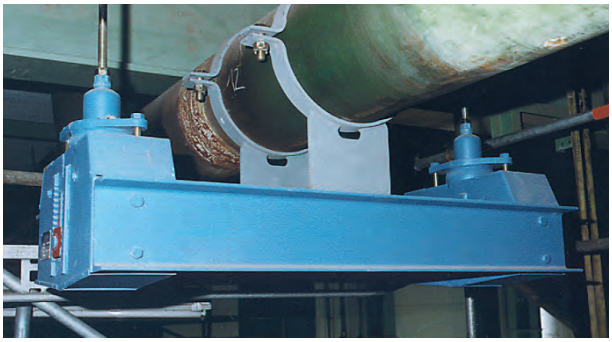

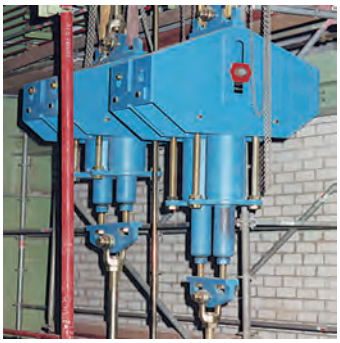

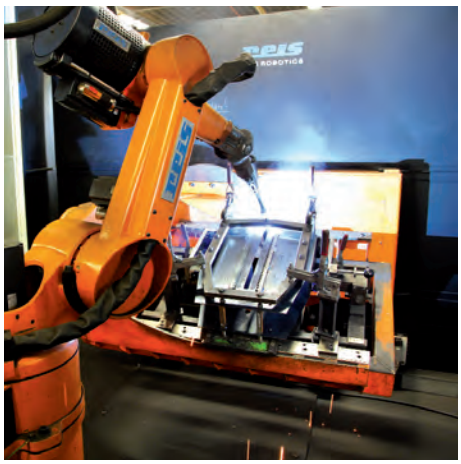

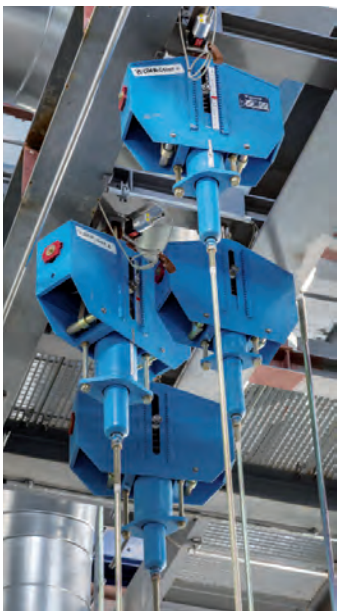

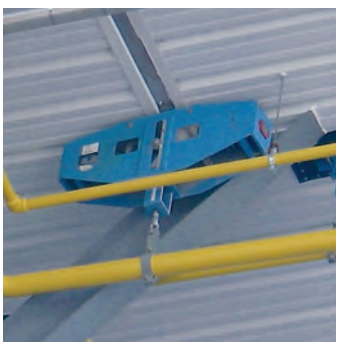

Constant hangers, constant supports

Contents **Page**

Field of application 1.1
Advantages and design overview 1.3
Mode of operation and function 1.5
Design features 1.7
Function testing 1.9
Installation overview 1.11
Selection overview 1.13
Selection tables 1.15
Constant hangers type 11 . . . . . 1.15
Support brackets type 71 for constant hangers type 11 . . . . . 1.16
Constant hangers types 12 – 14 . . . . . 1.17
Constant hangers types 12 – 14 with support brackets 1.18
Constant hangers type 18 . . . . . 1.19
Constant supports type 19 . . . . . 1.20
Angulating constant supports type 19 . . . . . 1.21
Selection tables special designs 1.22
Constant hanger trapezes type 79 . . . . . 1.22
Heavy duty constant supports type 16 . . . . . 1.24
Servohangers type 17 . . . . . 1.25
Installation and operating instructions 1.27

Field of application

To avoid unacceptable forces and moments in pipe systems, the thermal expansion of the piping must not be restricted.

Constant hangers types 11–14, Constant supports type 16

Minor thermal displacement in the pipe systems in the vertical direction can be compensated by spring supports or spring hangers. Due to the resulting proportionally increasing force deviation corresponding to the spring rate, their use is limited to a displacement range specified by the designer (see product group 2, pp 2.5 and 2.6).

In the case of greater vertical displacement the use of constant hangers or constant supports is required. For these special designs, the spring force is transformed into a constant force throughout the displacement range (see function principle, page 1.5).

The proportional loads of the pipe system can in this way be constantly distributed over the whole displacement range without significant deviations. As a rule, for LISEGA constant hangers the use of type 11, tried and tested over 100,000 times, provides the standard solution.

Constant hanger type 11

The function principle is based on the arrangement of three springs resulting in the parallelogram of forces. The design is distinguished by highly functional accuracy along with wide load adjustment ranges. The favorable performance-to-weight ratios and symmetrical designs enable easy installation. For further typical advantages, see page 1.3.

Constant hanger in a coal-fired power station

Final assembly of a constant hanger

Installation inspection of a constant hanger

Constant hangers type 18

As a rule, the pipe support engineer allows for sufficient installation space for the supports required. However, due to limitations of space the installation height can be too small for the typical standard solution with type 11.

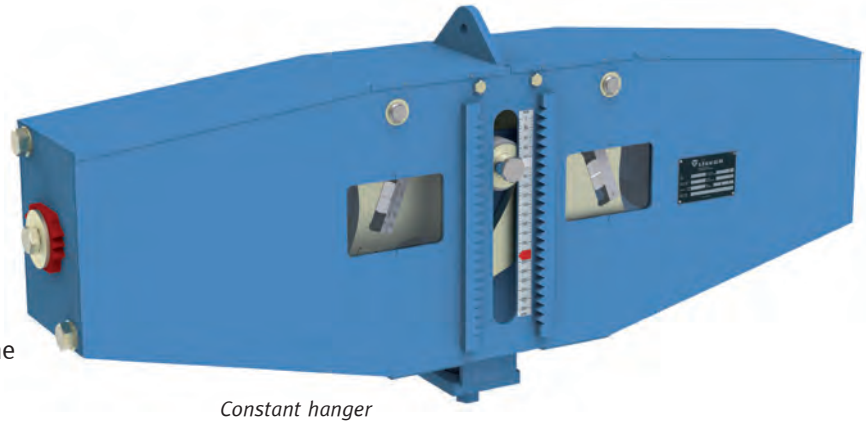

Constant hanger type 18

This sometimes occurs, especially when reconstruction existing plants. To provide the optimum solution in such cases, type 18, a low profile design, is available from the LISEGA hanger range, besides the main type 11 series.

The function principle of this design is based on the lever principle. Unlike the usual lever-arm type hangers, the load displacement here is linear and is constant, following the LISEGA principle (see function principle, page 1.6).

In the case of constant hangers, the pipe systems are suspended from roof constructions or the steelwork. If the piping is laid out near ground level it may be appropriate to take up the loads from below with constant supports.

Constant supports type 19

Due to its compact design, constant support type 19 thereby replaces its predecessor, type 16, as standard. Type 16 continues to be standard only in the heavy-duty range (load range 22481 – 89924 lbs [100 – 400kN]) for its coupling capacity.

On the basis of their special function principles and modes of design, LISEGA constant hangers and supports have, for the past five decades, proven their outstanding operational safety and reliability many thousands of times. Further descriptions of their mode of operation and function are set out on page 1.6 and their design features from page 1.7.

For the operational safety and long life of the pipe systems and hence of the plant itself, the consistent functional accuracy of the constant hangers is of utmost importance.

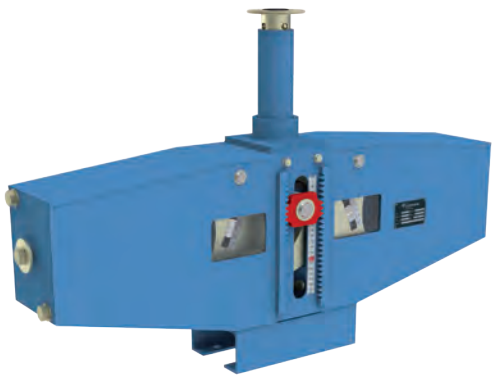

Constant support type 19

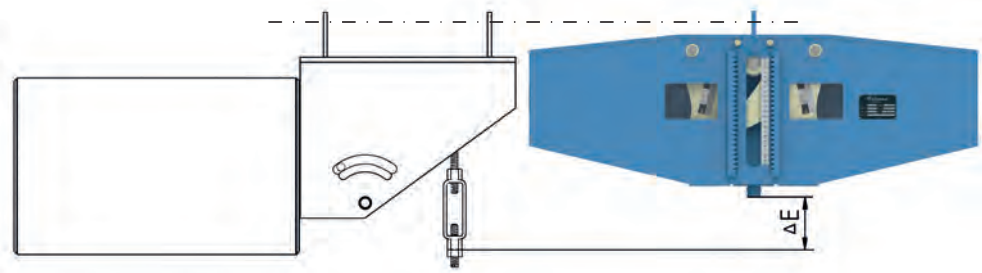

Space-saving design of type 18 compared to a conventional lever-arm hanger

In comparison with conventional lever-arm type hangers the new LISEGA type 18 is lower profile and enables the creation of support chains in the smallest of spaces.

Special benefits of LISEGA constant hangers and supports

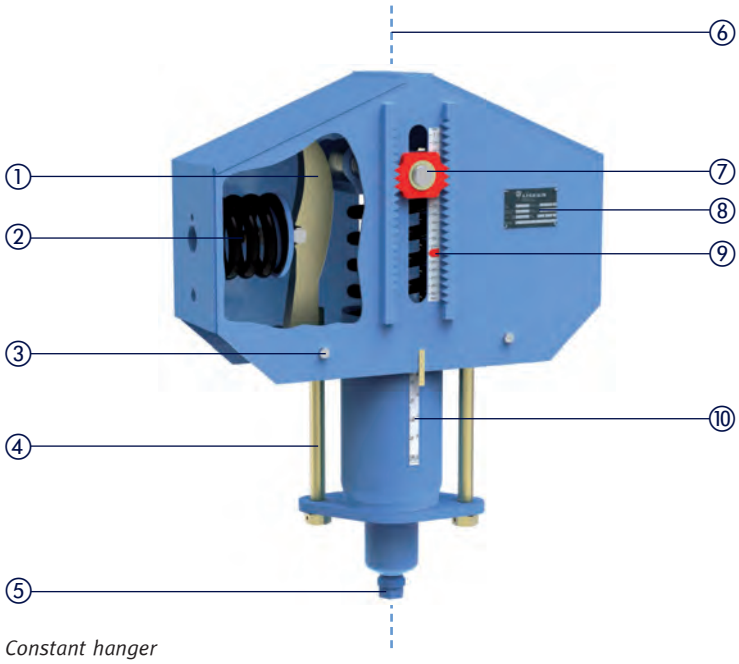

Constant hanger type 11

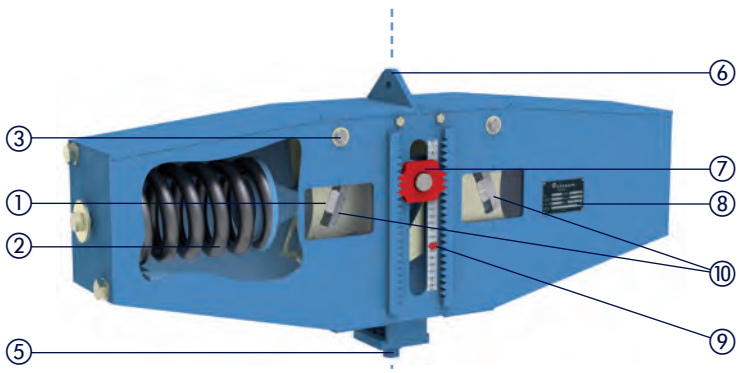

Constant hanger type 18

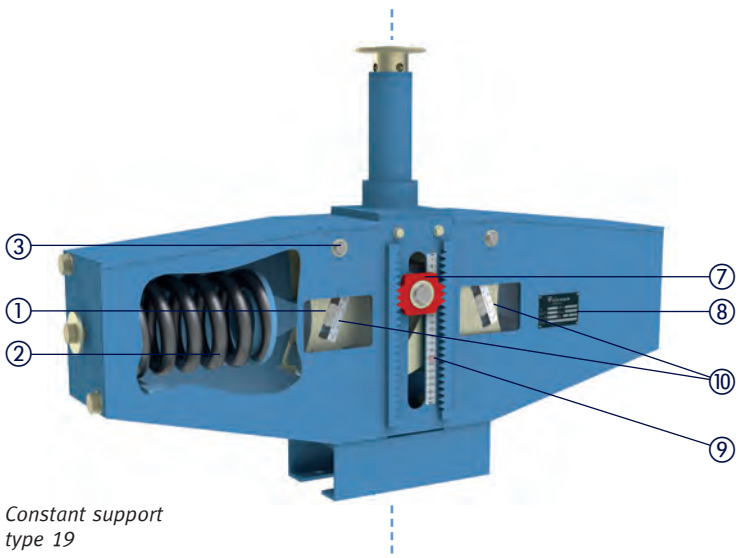

Constant support type 19

The user can profit from a variety of special benefits where LISEGA constant hangers are concerned.

Significant savings are possible, especially regarding labor-intensive ancillary support costs such as planning, installation and operation.

① Principle-based constancy by way of a special function principle.

② Pre-relaxed springs eliminate any significant loss of load-bearing capacity.

③ Reduced friction due to minimized number of bearing points.

④ Especially wide load adjustment range avoids hanger replacement when operational loads change.

⑤ Turnbuckle and swivel joint function allows greater adjustment of pipe installation position.

⑥ Load application free of moments due to a single suspension point.

⑦ Blocking device through fine rasterization nearly infinitely variable.

⑧ Name plate contains complete technical specifications.

⑨ Directly readable travel scale with marking for hot/cold positions.

⑩ Load scale with permanent marking of set load.

✓ Symmetrical design ensures direct flow of forces through axis of symmetry.

✓ Favorable performance-weight ratios for reduced installation loads.

✓ Arranged by load groups and travel ranges to simplify selection (modular system).

✓ Consistent functional behavior due to high-quality corrosion protection and maintenance-free chemically nickelized finishes.

✓ Readily adaptable to installation situation via corresponding designs and standardized accessories.

✓ Double load-tube guiding of constant supports for transmission of side loads.

✓ Secure connection of load chains due to load- and connection-compatible modular components.

LISEGA constant hanger and support types

As fixed elements in the pipe system concept, the pipe supports must operate smoothly as functional connections between the pipe system and the surrounding structure.

Type 11

Type 11 with support brackets

Type 18

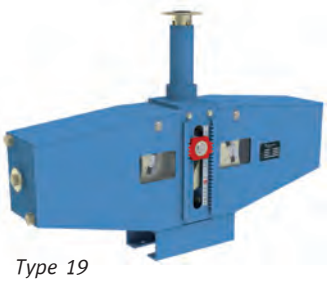

Type 19

Type 17 with support brackets

Pipe systems are usually very complex layouts with restricted space. To allow for optimum use of the different spatial conditions, various designs are available as standard for the different application situations. All components are available either from stock or at short notice.

Constant hanger type 11 C3 29 to 11 96 25

Standard design for use as suspension for loads up to load group 9 (22481 lbs [100kN]) and travel range 6 (29.53 inch [750mm]). Travel range 7 (35.43 inch [900mm]) is available on request. If no space restrictions or other specifications are to be considered, this is the preferred product.

Constant hanger type 11 with support brackets type 71 C3 .1 to 71 96 .1

Standard design with support brackets bolted at the LISEGA factory for use as seated versions.

Constant hanger type 18 D3 37 to 18 93 37

Serial standard design in special low profile version as alternative suspension to type 11, if the installation height is limited.

Constant support type 19 D3 17 to 19 93 17

Serial standard design for use as support if constant support from below is required.

Note: This version replaces the taller single-cell constant hanger type 16 (see Standard Supports Catalog 2010) and is especially suitable in restricted spaces. Type 16 can still be supplied if required.

Heavy constant support type 16

Special design as multi-cell constant support type 16, if heavy loads have to be distributed.

Servohanger type 17 52 25 to 17 93 25

Servohangers are equipped with additional active load regulation and can reduce overloading in the piping system to a permissible harmless level.

Type 16

Mode of operation and function
Types 11, 12, 13, 14, 16, 79

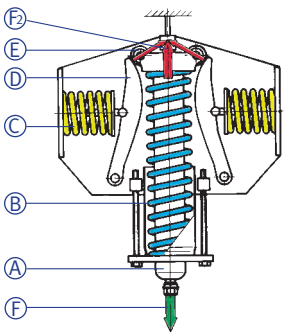

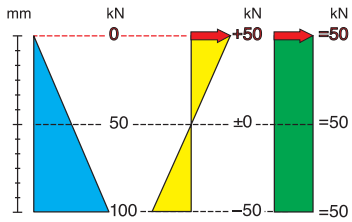

Upper position

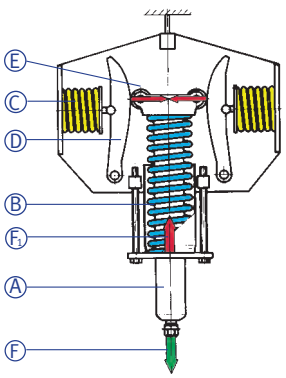

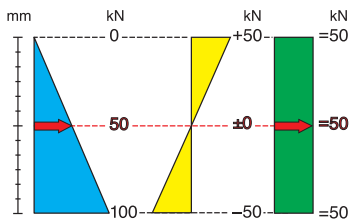

Middle position

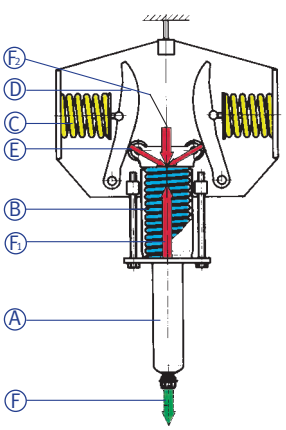

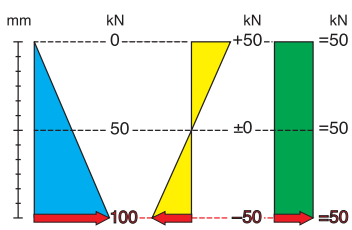

Lower position

The LISEGA Function Principle

The LISEGA Function Principle is based on the interaction of the force from a mainspring and the resulting force of two connected balance springs. The force directions of the pre-loaded compensating springs are thereby angled against each other in the shape of a parallelogram of forces.

The suspended load Ⓕ acts directly on the mainspring Ⓑ via the load tube Ⓐ. The pre-loaded compensating springs Ⓒ act additionally on the load tube as the resulting force Ⓕ₂ via pivoting cams Ⓓ and roller supports Ⓔ. The mainspring force Ⓕ₁ and the resulting force Ⓕ₂ change on the shifting of the load over the displacement range in accordance with the specified spring constants, the cam path, and the angular position of the cam components.

The course of the resulting force corresponds to the characteristics of the mainspring. In this way the mainspring force is balanced out, without deviations, to a constant support force.

- **The LISEGA function principle leads to theoretical absolute constancy which can easily be proven.**
- **The LISEGA function principle permits an especially wide load adjustment range of 40% – 100% of the nominal load.**

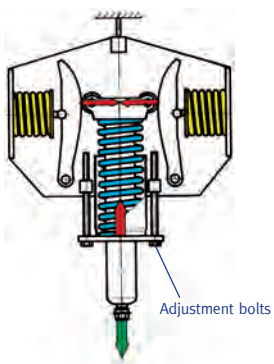

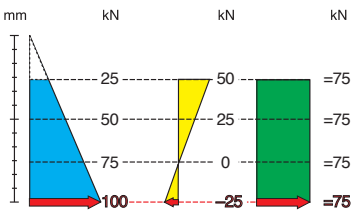

$F_1 + F_2 = F_{75\%}$

Load adjustment

The load adjustment is carried out by a pre-loading of the mainspring. As the characteristics of the resulting balancing force and the mainspring are the same, only a linear shifting of the initial force thereby occurs Ⓕ₁. This way, the change in force is the same at every point of the movement and the ultimate load remains constant at each load setting.

The remaining travel range changes proportionally to the load alterations.

Mode of operation and function Types 18, 19

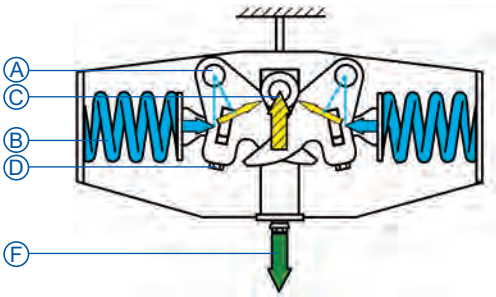

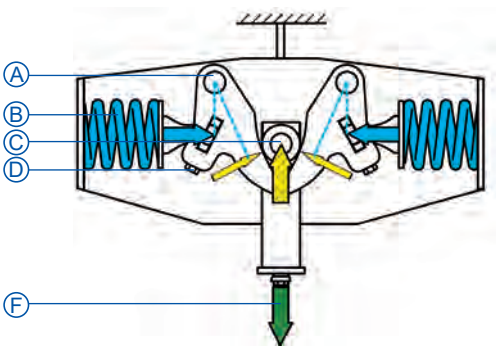

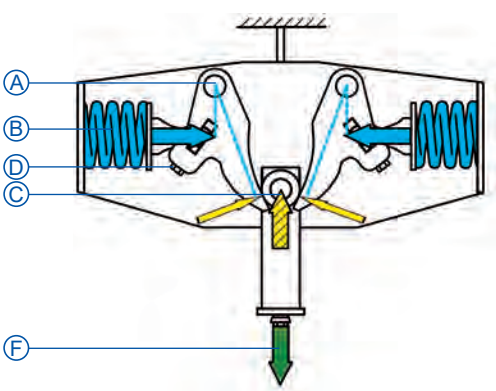

Function principle for LISEGA constant hangers type 18 and constant supports type 19
The function principle is based on the lever principle, by which variable spring forces are transformed into a constant support force by way of lever mechanics.

Two lever arms Ⓐ, symmetrically arranged at an angle to each other, thereby act as one system with pre-loaded springs Ⓑ. On a vertical change in position of the load Ⓕ to be taken up, the displacement is distributed over rollers Ⓒ and defined bearing surfaces onto the lever systems. Through the pairing arrangement of the levers the displacement runs linearly in the axis of symmetry, whereby the lever conditions that thereby change do so proportionally to the correspondingly changing spring preloading. In this way the load stays in balance with the set set load in every travel position.

Sinus-shaped load deviations from the lever movement in the form of an arc are balanced by correspondingly machined cam profiles. This way the load distribution is held constant with mathematical accuracy in every position.

Load adjustment

The set load is adjustable within a range of approx. 50% to 100% of the maximum hanger force. By way of an adjusting hex-head bolt Ⓓ the length of the lever arm force is continuously variable.

On all load settings the available travel range remains unchanged. The whole working travel range is always available.

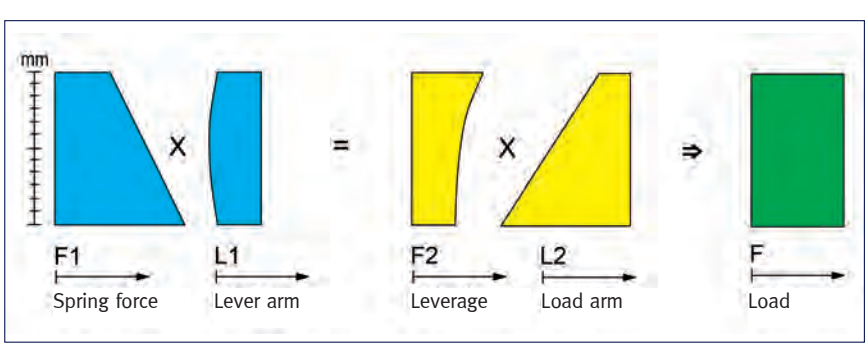

Design features

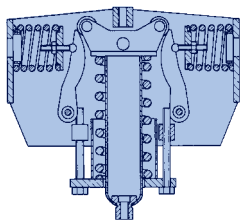

LISEGA constant hanger type 11 standard design

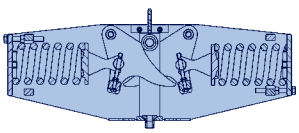

LISEGA constant hanger type 18 compact design

Design Structure

A steel body encases the moving parts such as springs and cam lever. The compact arrangement of the individual components enables small external dimensions. The body is designed to bear loads and is mass-produced for the attachment of standardized connections.

Connection possibilities

The connection threads correspond to the respective LISEGA load group, whereby the upper connection thread (type 11) has a defined thread engagement depth and the lower one is designed as a adjusting nut for length compensation.

Due to their design, type 11 constant hangers can also be seated directly on suitable supporting components without the need for accessories. In addition, special support brackets can be bolted on using the standard tapped holes provided. Type 11 constant hangers above load group 9 (heavy duty) and type 18 constant hangers are fitted with yoke plates (only on top) for a pined connection, instead of connection threads.

▼ *Serial connection types*

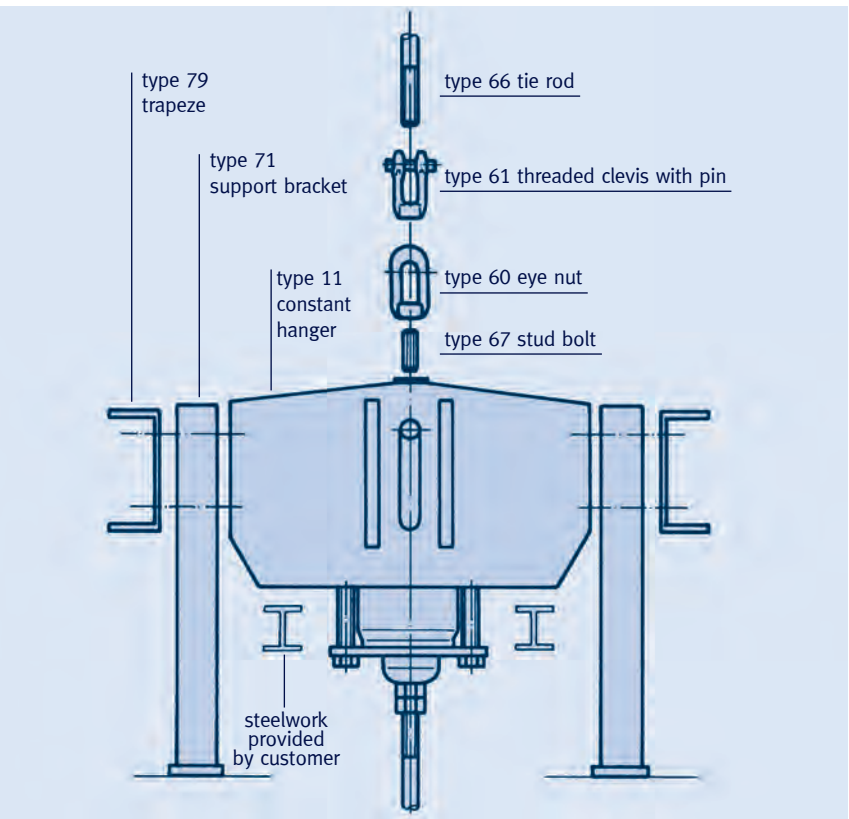

Performance range

Constant hangers and supports are produced as standardized single-cell hangers in load groups C to 9. In addition, type 11 constant hangers in sizes 8 and 9 are coupled to form hangers for higher loads (heavy duty). In this way a standard performance range from 0.29 lbs [0.13kN] to 112405 lbs [500kN] is covered. Constant hangers are manufactured in the seven standard travel ranges 2.95 / 5.91 / 11.81 / 17.72 / 23.62 / 29.53 / 35.43 inch and constant supports up to 11.81 inch [300mm].

Standards and calculations

Component design and layout correspond to the applicable national and international standards and recognized technical specifications with regard to load capacity, function and lifespan. This applies equally to the materials used, the welding technology and other processes. The relevant details are clearly defined in the technical specifications, page 0.9.

Springs

The springs are crucial components for the smooth functioning of constant hangers and supports – their long-term functional efficiency is vital for the operational safety of hangers and supports. The relevant standards are the basis for the design of LISEGA helical coil springs. Details can be found in the **technical specifications**, section 0.

Spring relaxation

When subjected to loads and temperature over a period of time, conventional helical coil springs lose part of their reset force through relaxation (settling loss). In constant and spring hangers this can, in the long term, lead to a reduction in the set ultimate load of more than 10% (see calculation example).

LISEGA exclusively uses springs that, through an artificial aging process, show no appreciable settling loss. The spring relaxation normally to be expected is anticipated by producing preplastification in a hot setting process with greater coil lengths.

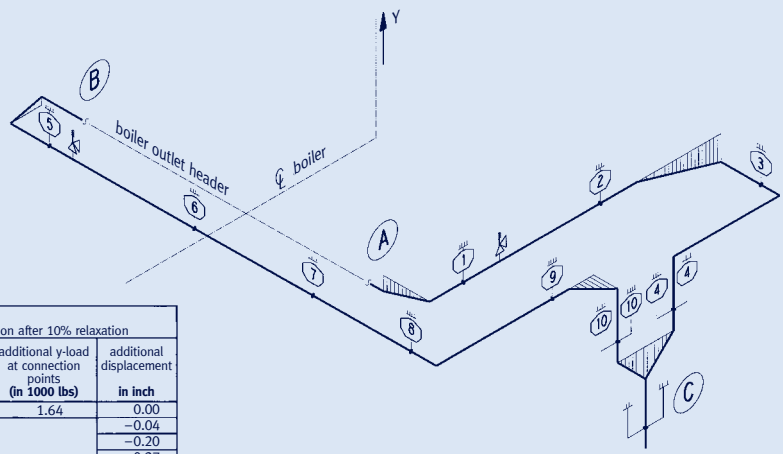

connection point / hanger	planned condition: hanger set load in (1000 lbs)	condition after 10% relaxation: hanger load in (1000 lbs)	additional y-load at connection points (in 1000 lbs)	additional displacement in inch
A			1.64	0.00
1	13.25	11.92		−0.04
2	15.17	13.66		−0.20
3	12.21	10.99		−0.27
4	17.61	15.85		0.01
B			3.88	0.00
5	13.13	11.82		−0.17
6	13.11	11.80		−0.82
7	8.09	7.28		−1.20
8	10.71	9.64		−1.43
9	12.16	10.95		−0.76
10	15.12	13.61		−0.04
C			8.25	0.00

Calculation example of cumulative additional loads due to hanger relaxation

A pipe system was observed (dia = 20.7 inch [525mm], s = 1.06 inch [27mm], temperature = 1004°F [540°C], pressure = 725psi [50 bar]). The effect of a 10% loss of force in the hangers was assumed. Due to this loss, the pipe system is displaced by 1.43 inch [36.4mm].

The maximum primary stresses were calculated in the vicinity of the boiler connection. They stand 93% above the planned stress condition.

The permissible stresses for the boiler connection are exceeded by 9% (calculations according to Regulation B31.1).

Corrosion protection

The constant hangers are finished with a LISEGA standard coating which, together with a metallically pure treated surface, offers superior corrosion protection with high mechanical stability. Bearings and bearing bolts for the constant hangers are plated or made of non-rusting materials. All threaded components and cams are electro galvanized.

The surface of the spring is given a special finish (**technical specifications,** page 0.11).

Constant hangers with standard corrosion protection need no maintenance if installed in buildings or in locations protected from the weather. For operation in the open or in special situations, corresponding extra corrosion protection can be arranged – see the corrosion protection section in **technical specifications**, page 0.10.

Paintshop

Spring testing at material reception

Function testing

Functional performance

The special functional principle of LISEGA constant hangers guarantees constancy across the entire travel range. This is also unaffected by shifts in load. Only a minor adjustment force produced by tolerances and bearing friction is to be taken into account. The hysteresis so produced is kept within strict limits due to the design principle and modern production processes.

In effect, the deviation in the set load of LISEGA constant hangers on the serial average can, on normal load setting, be kept to ±3%.

Applying a selection process, with limited load and travel ranges, it is possible to reduce this even further.

Calibration, testing and blocking of a constant hanger type 12 on a 112405 lbs [500kN] test bench

The typical permissible deviations are set out in the following international codes:

- **MSS SP-58 (USA), max. ±6% in relation to the operating load**
- **VGB-R510L and KTA 3205.3, Germany, max. ±5% in relation to the operating load. The deviation in load adjustment (medium load) is limited to ±2%**
- **DIN EN 13480-T3 max. ±5% in relation to the operating load**

Function testing

Before shipment, all constant hangers and supports are tested for flawless functioning and set to the load ordered. The test results are recorded.

The calibration values are stamped onto a riveted name plate. The adjusted load is also marked permanently on the load scale. Hot and cold positions are noted on the travel scale in red and white respectively.

The respective travel positions can be read directly off the travel scale in mm or inches.

Acceptance testing of a constant hanger

The set load in each case can be read directly off a load scale in kN or lbs. For the functional tests, test benches operating quasi-statically with capacities up to 224809 lbs [1000kN] are on hand. The test benches are checked regularly by an independent supervisory body.

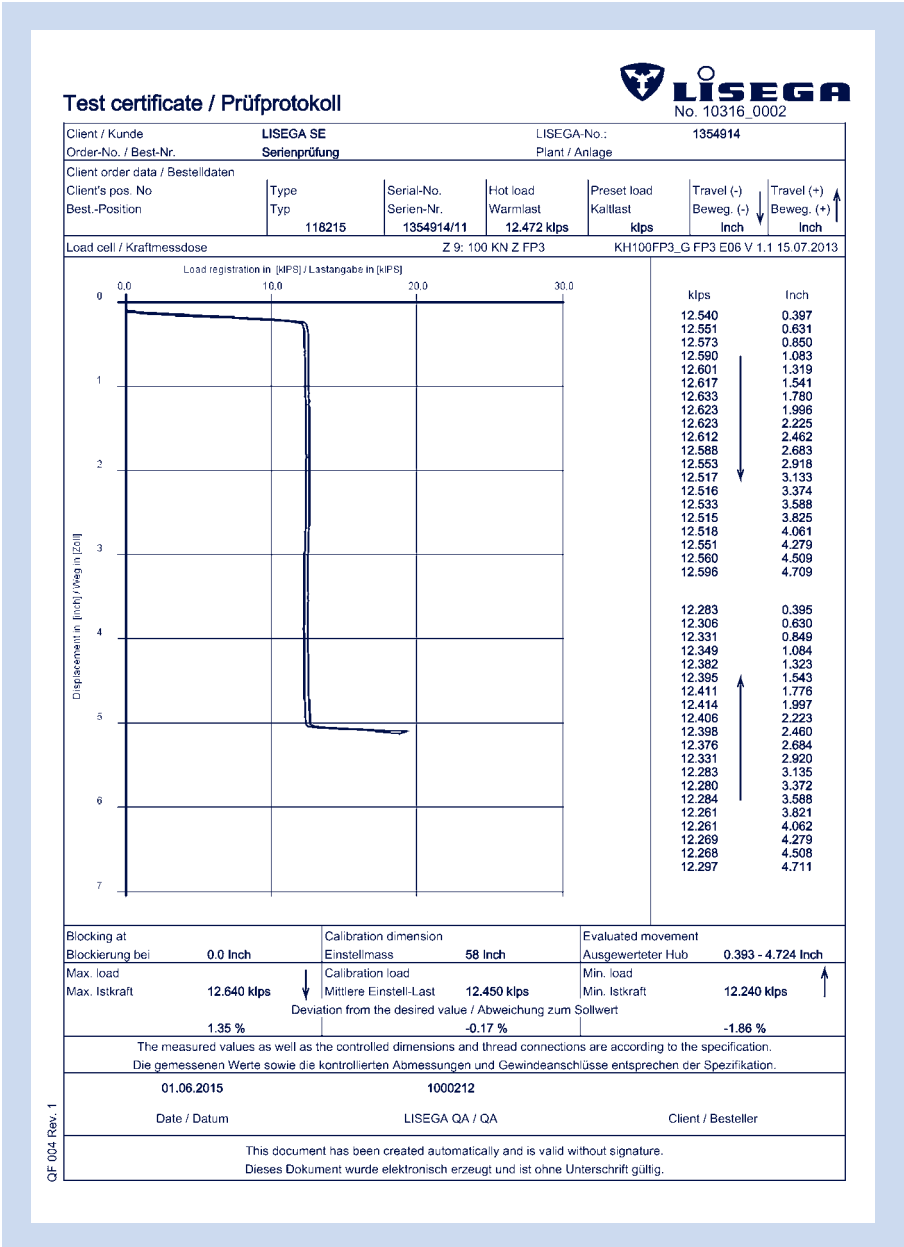

LISEGA

Test certificate / Prüfprotokoll

No. 10316_0002

Client / Kunde	LISEGA SE	LISEGA-No.:	1354914
Order-No. / Best-Nr.	Serienprüfung	Plant / Anlage	

Client order data / Bestelldaten

Client's pos. No Best.-Position	Type Typ	Serial-No. Serien-Nr.	Hot load Warmlast	Preset load Kaltlast	Travel (-) Beweg. (-) ↓	Travel (+) Beweg. (+) ↑
	118215	1354914/11	12.472 klps	klps	Inch	Inch

Load cell / Kraftmessdose: Z 9: 100 KN Z FP3 — KH100FP3_G FP3 E06 V 1.1 15.07.2013

Load registration in [kIPS] / Lastangabe in [kIPS]

Displacement in [Inch] / Weg in [Zoll]

kIps	Inch
12.540	0.397
12.551	0.631
12.573	0.850
12.590	1.083
12.601	1.319
12.617	1.541
12.633	1.780
12.623	1.996
12.623	2.225
12.612	2.462
12.588	2.683
12.553	2.918
12.517	3.133
12.516	3.374
12.533	3.588
12.515	3.825
12.518	4.061
12.551	4.279
12.560	4.509
12.596	4.709
12.283	0.395
12.306	0.630
12.331	0.849
12.349	1.084
12.382	1.323
12.395	1.543
12.411	1.776
12.414	1.997
12.406	2.223
12.398	2.460
12.376	2.684
12.331	2.920
12.283	3.135
12.280	3.372
12.284	3.588
12.261	3.821
12.261	4.062
12.269	4.279
12.268	4.508
12.297	4.711

Blocking at Blockierung bei 0.0 Inch	Calibration dimension Einstellmass 58 Inch	Evaluated movement Ausgewerteter Hub 0.393 - 4.724 Inch
Max. load ↓ Max. Istkraft 12.640 klps	Calibration load Mittlere Einstell-Last 12.450 klps	Min. load ↑ Min. Istkraft 12.240 klps
Deviation from the desired value / Abweichung zum Sollwert		
1.35 %	-0.17 %	-1.86 %

The measured values as well as the controlled dimensions and thread connections are according to the specification.
Die gemessenen Werte sowie die kontrollierten Abmessungen und Gewindeanschlüsse entsprechen der Spezifikation.

01.06.2015	1000212	
Date / Datum	LISEGA QA / QA	Client / Besteller

This document has been created automatically and is valid without signature.
Dieses Dokument wurde elektronisch erzeugt und ist ohne Unterschrift gültig.

QF 004 Rev. 1

Example of a test certificate in a standard delivery inspection

LISEGA testing technology is constantly under improvement and represents state-of-the-art technology. These improvements cover test benches for constant hangers and supports, spring hangers and supports, as well as snubbers.

The testing facilities are in operation at all production sites within the LISEGA group, while mobile units are available for use at customer locations.

32 test benches are on hand for constant and spring hangers or constant and spring supports in the load range from 224.8 lbs to 224809 lbs [1kN to 1000kN]. All LISEGA test benches are tested at regular intervals according to DIN EN ISO 7500 with calibrated load cells and measurement amplifiers.

All components are tested in installation condition and adjustment.

Testing a constant hanger on a LISEGA 26977 lbs [120kN] test bench

Mobile LISEGA 11240 lbs [50kN] snubber test bench PR50

Testing a spring hanger on a LISEGA 26977 lbs [120kN] test bench

Installation overview

Universal adaption to existing installation spaces

The installation of the constant hangers can be adapted to any situation in the plant through the use of universal accessory components from the modular system.

Automatic designing

All configurations can be created in just a few steps via the LICAD design software in the shortest of time with the input of 6 parameters – with parts lists and drawings.

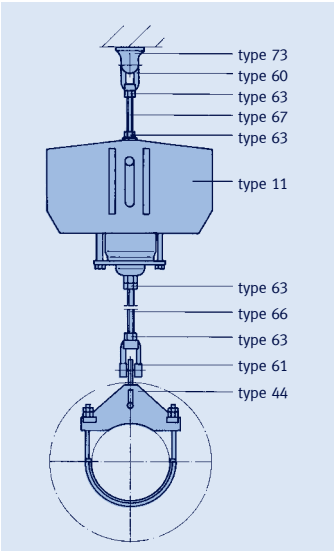

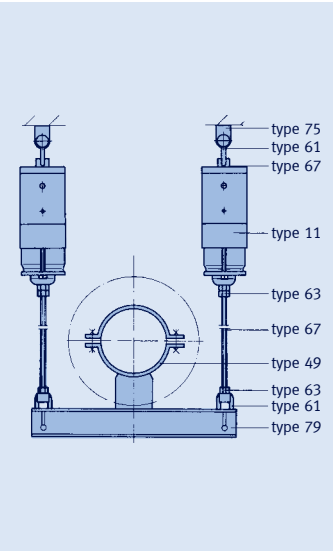

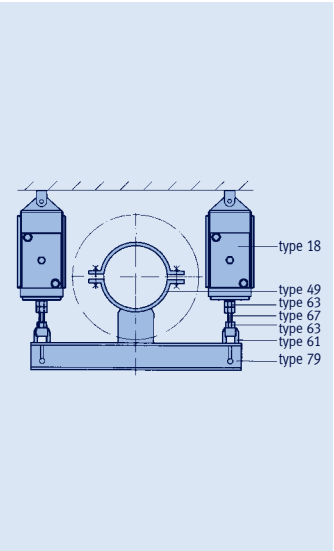

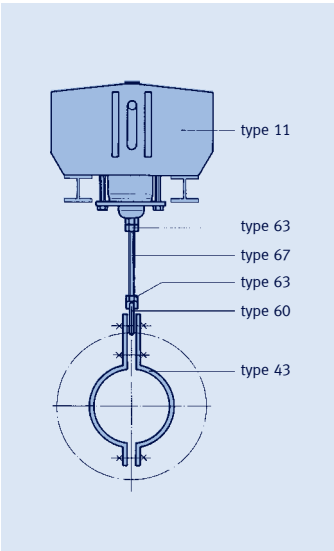

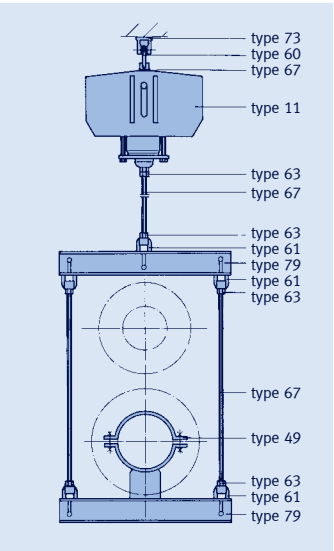

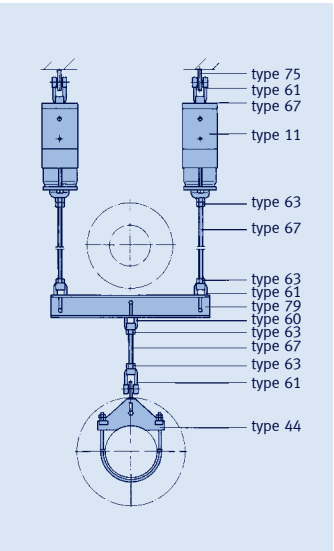

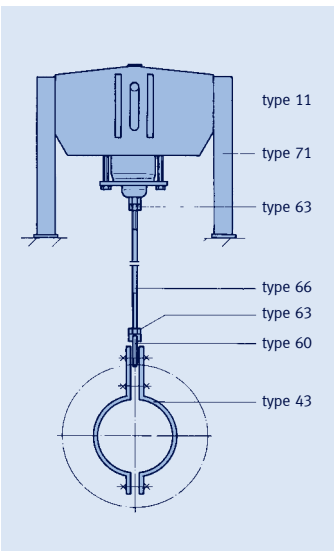

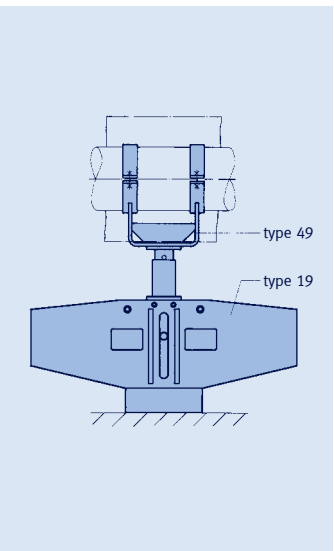

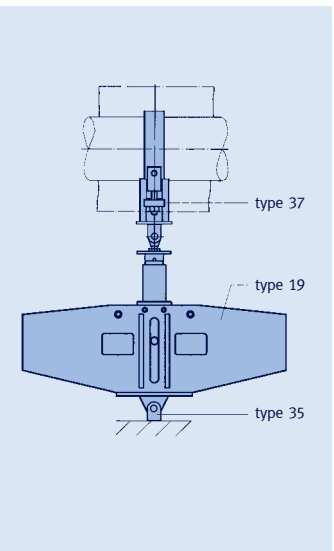

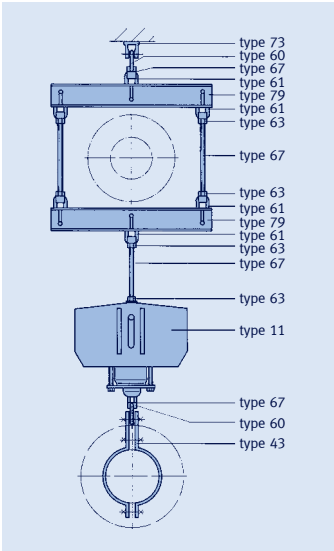
type 73
type 60
type 67
type 61
type 79
type 61
type 63
type 67
type 63
type 61
type 79
type 61
type 63
type 67
type 63
type 11
type 67
type 60
type 43

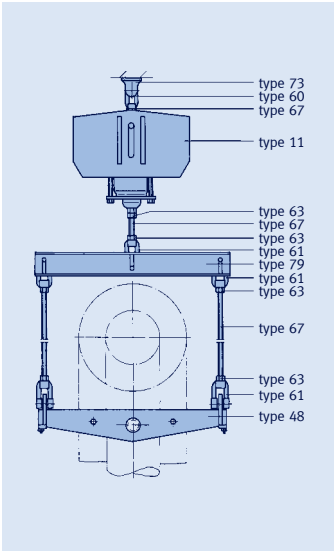
type 73
type 60
type 67
type 11
type 63
type 67
type 63
type 61
type 79
type 61
type 63
type 67
type 63
type 61
type 48

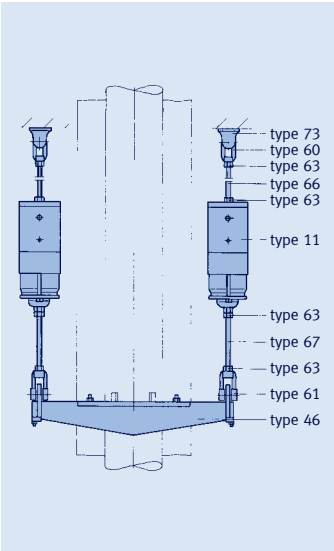
type 73
type 60
type 63
type 66
type 63
type 11
type 63
type 67
type 63
type 61
type 46

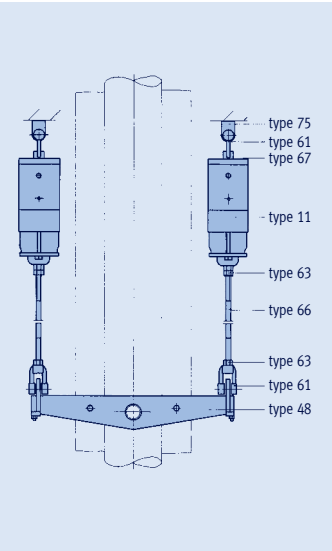
type 75
type 61
type 67
type 11
type 63
type 66
type 63
type 61
type 48

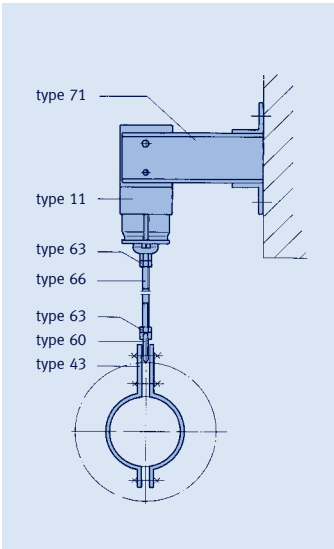
type 71
type 11
type 63
type 66
type 63
type 60
type 43

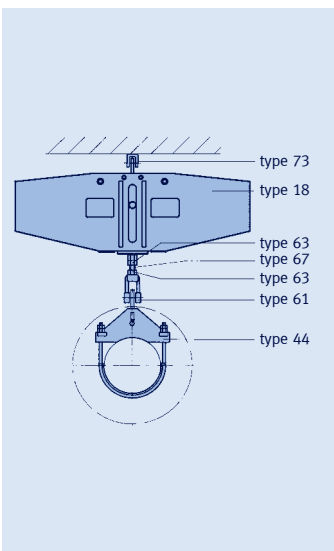
type 73
type 18
type 63
type 67
type 63
type 61
type 44

Selection overview
Types 11, 12, 13, 14, 16, 79 ⑥

Constant hangers, heavy duty constant supports ①

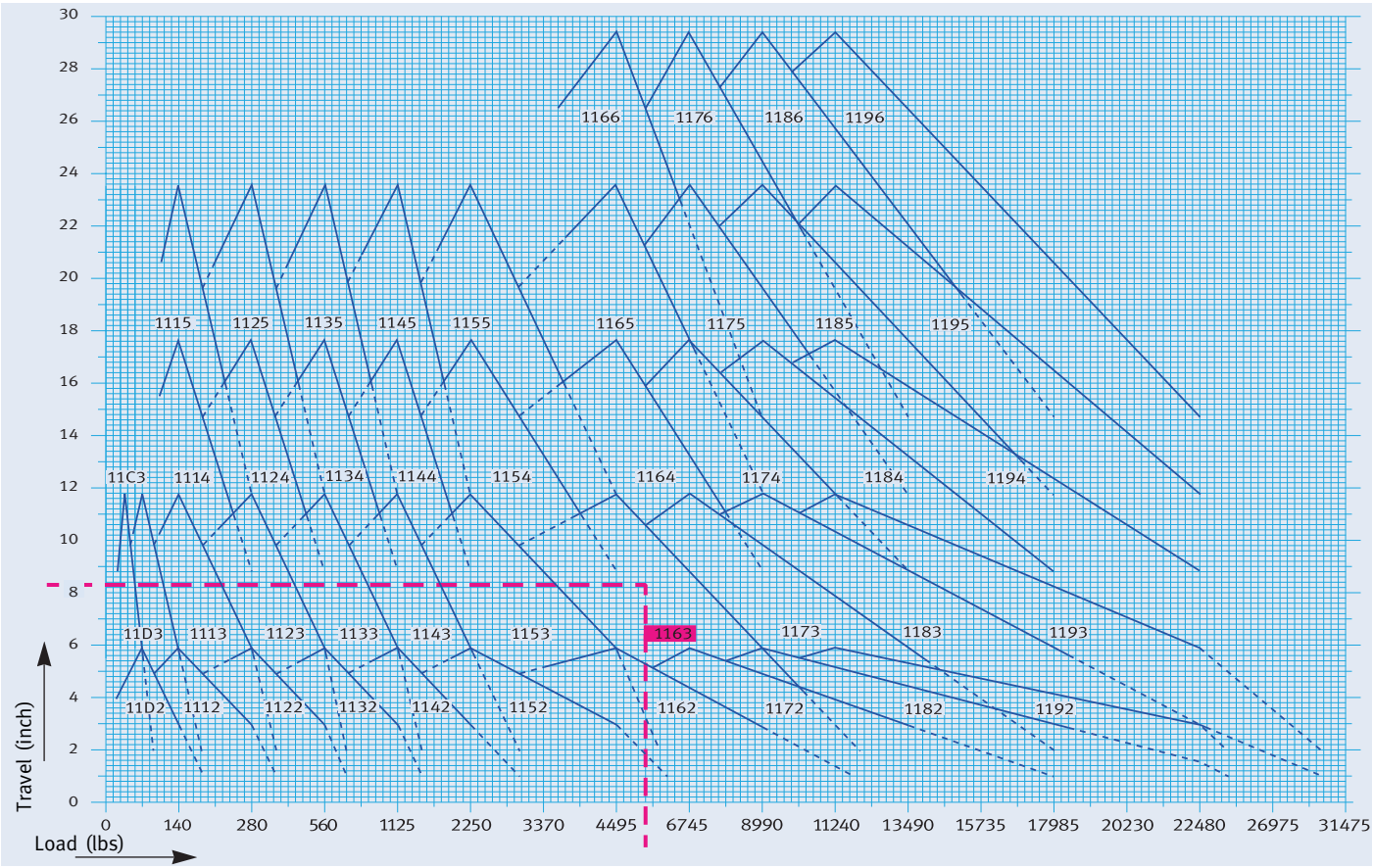

Selection example: 5395 lbs/ 8.27 inch

type designation					load [lbs]									
			11 C3	–	29 ②	31	34	36	38	40	43	45	47	49
			11 D3	11 D2	56 ②	61	65	70	74	79	85	90	94	99
	11 15	11 14	11 13	11 12	112	121	130	142	151	160	169	178	187	198
	11 25	11 24	11 23	11 22	225	243	263	281	299	319	337	355	373	393
	11 35	11 34	11 33	11 32	450	488	524	562	600	636	674	713	749	787
	11 45	11 44	11 43	11 42	899	973	1048	1124	1198	1272	1349	1423	1497	1574
	11 55	11 54	11 53	11 52	1798	1949	2097	2248	2399	2547	2698	2848	2997	3147
11 66	11 65	11 64	11 63	11 62	3597	3896	4195	4496	4795	5094	5395	5694	5993	6295
11 76	11 75	11 74	11 73	11 72	5395	5845	6295	6744	7194	7644	8093	8543	8992	9442
11 86	11 85	11 84	11 83	11 82	7194	7792	8392	8992	9590	10191	10791	11389	11989	12589
11 96	11 95	11 94	11 93	11 92	8992	9741	10490	11240	11989	12738	13489	14237	14986	15737
12 86	12 85	12 84	12 83⑤	12 82⑤	14388	15586	16784	17985	19183	20381	21582	22773	23978	25179
12 96	12 95	12 94	12 93⑤	12 92⑤	17985	19482	20975	22481	23987	25471	26977	28483	29967	31473
13 86	13 85	13 84	13 83⑤	13 82⑤	21582	23380	25179	26977	28776	30574	32372	34171	35969	37768
13 96	13 95	13 94	13 93⑤	13 92⑤	26977	29225	31473	33721	35969	38218	40466	42714	44962	47210
14 86	14 85	14 84	14 83⑤	14 82⑤	28776	31181	33564	35969	38375	40758	43163	45569	47952	50357
14 96	14 95	14 94	14 93⑤	14 92⑤	35969	38959	41972	44962	47952	50964	53954	56944	59957	62946
...2.. (5.91 inch)④					5.31	5.51	5.71	5.91	5.71	5.51	5.31	5.12	4.92	4.72
...3..(11.81 inch)④					10.63	11.02	11.42	11.81	11.42	11.02	10.63	10.24	9.84	9.45
...4..(17.72 inch)④					15.94	16.54	17.13	17.72	17.13	16.54	15.94	15.35	14.76	14.17
...5..(23.62 inch)④					21.26	22.05	22.83	23.62	22.83	22.05	21.26	20.47	19.69	18.90
...6..(29.53 inch)④					26.57	27.56	28.54	29.53	28.54	27.56	26.57	25.59	24.61	23.62

Intermediate values can be interpolated.

① For the selection of constant supports and angulating constant supports type 16, the load group and travel range of the corresponding constant hangers type 11 apply.

② Loads < 56 lbs [0.25kN] or 29 lbs [0.13kN] on request.

③ This range is only adjustable ex works.

④ Total travel, travel range 7 (35.43 inch [900mm]) supplied on request.

⑤ Selection also applies to heavy duty constant support type 16.

⑥ Based on type 11.

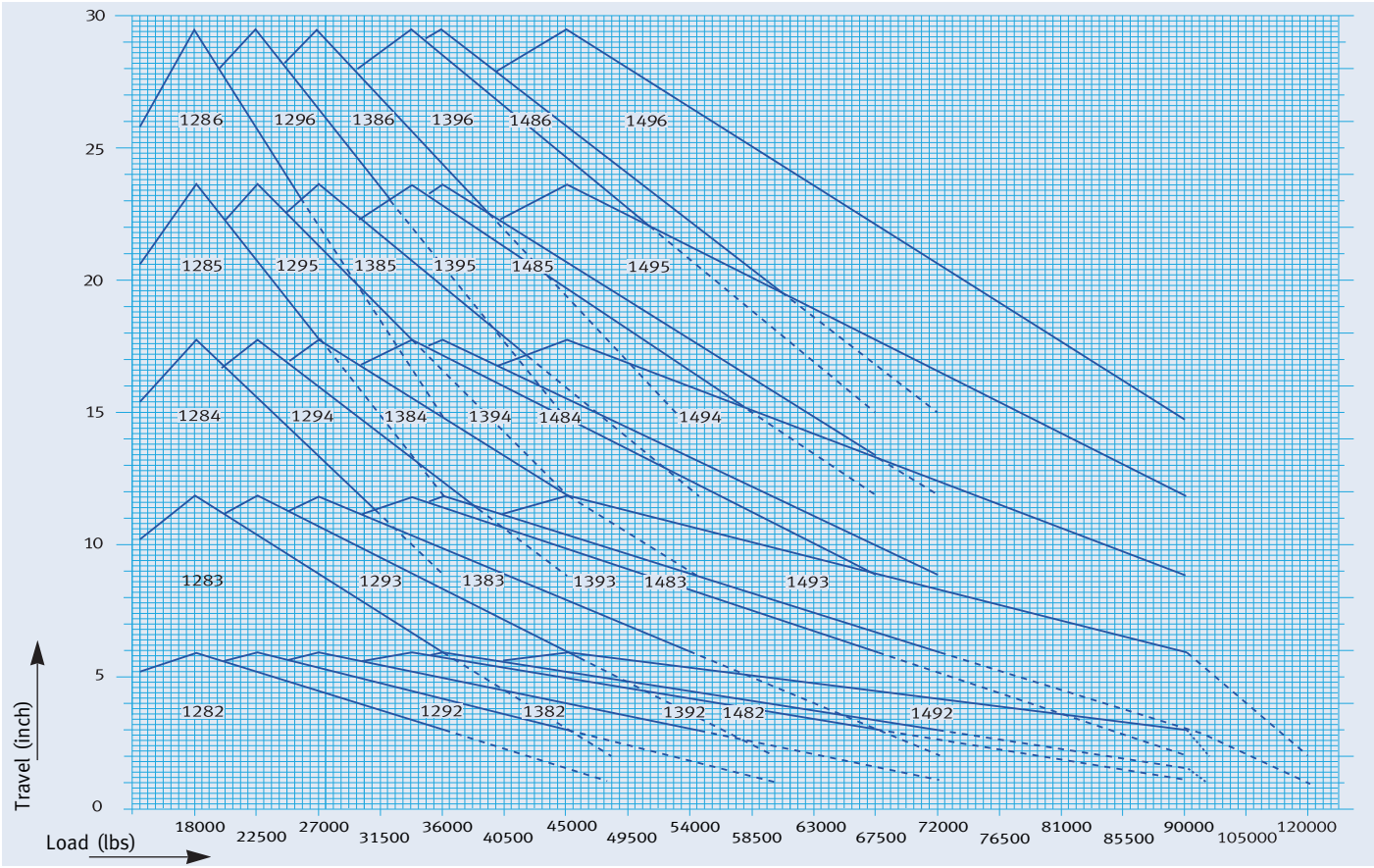

load [lbs]											type designation				
									③	③					
52	54	56	58	61	63	65	67	70	83	94	–	11C3			
103	108	112	117	121	126	130	135	142	164	187	11D2	11D3			
207	216	225	234	243	254	263	272	281	326	373	1112	1113	1114	1115	
411	432	450	468	486	506	524	544	562	654	749	1122	1123	1124	1125	
825	861	899	937	973	1012	1050	1086	1124	1311	1497	1132	1133	1134	1135	
1648	1722	1798	1873	1947	2023	2097	2172	2248	2621	2997	1142	1143	1144	1145	
3298	3446	3597	3748	3896	4047	4197	4346	4496	5245	5993	1152	1153	1154	1155	
6594	6893	7194	7493	7792	8093	8392	8691	8992	10490	11989	1162	1163	1164	1165	1166
9892	10341	10791	11240	11690	12140	12589	13039	13489	15737	17985	1172	1173	1174	1175	1176
13187	13788	14388	14986	15586	16186	16784	17384	17985	20981	23978	1182	1183	1184	1185	1186
16485	17234	17985	18733	19482	20233	20981	21730	22481	26226	29974	1192	1193	1194	1195	1196
26370	27575	28776	29967	31172	32372	33564	34769	35969	41963	47958	1282⑤	1283⑤	1284	1285	1286
32979	34463	35969	37476	38959	40466	41972	43456	44962	52455	59948	1292⑤	1293⑤	1294	1295	1296
39566	41365	43163	44962	46760	48559	50357	52156	53954	62946	71939	1382⑤	1383⑤	1384	1385	1386
49458	51706	53954	56202	58450	60698	62946	65195	67443	78683	89924	1392⑤	1393⑤	1394	1395	1396
52763	55146	57551	59957	62340	64745	67150	69533	71939	83932	95926	1482⑤	1483⑤	1484	1485	1486
65936	68949	71939	74929	77941	80931	83921	86911	89924	104907	119891	1492⑤	1493⑤	1494	1495	1496
4.53	4.33	4.13	3.94	3.74	3.54	3.35	3.15	2.95	1.97	0.98	inch④				
9.06	8.66	8.27	7.87	7.48	7.09	6.69	6.30	5.91	3.94	1.97	inch④				
13.58	12.99	12.40	11.81	11.22	10.63	10.04	9.45	8.86	inch④						
18.11	17.32	16.54	15.75	14.96	14.17	13.39	12.60	11.81	inch④						
22.64	21.65	20.67	19.69	18.70	17.72	16.73	15.75	14.76	inch④						

Constant hangers
Type 11

Constant hangers
type 11 C3 29 to 11 96 25
Serialized standard design, delivery from stock.

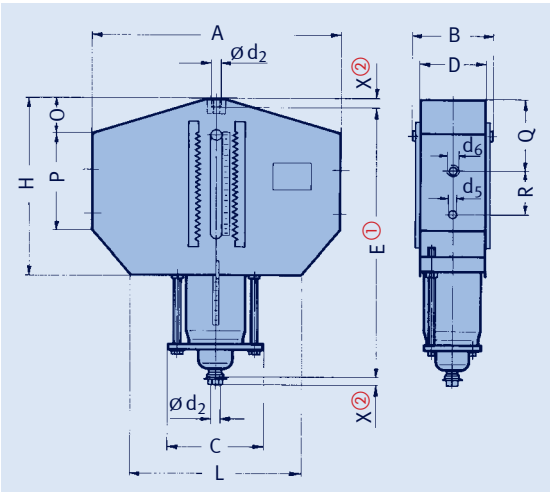

① Dimension E for uppermost blocking position, in other blocking positions E lengthens accordingly.

② X = minimum engagement depth. At the lower connection, maximum engagement depth = X + 11.81 inch [= X + 300mm].

type	A	B	C	D	d_2	d_5	d_6	E ①	H	L	O	P	Q	R	X ②	weight [lbs]
11 C3 29	13.78	5.12	5.91	4.13	3/8 UNC	0.35	0.35	20.87	17.91	9.84	1.57	10.43	9.45	1.69	0.59	31
11 D2 29	11.81	4.33	6.10	3.39	3/8 UNC	0.43	0.43	13.78	9.84	9.06	0.00	7.68	4.92	1.69	0.59	22
11 D3 29	16.14	5.12	6.69	4.17	3/8 UNC	0.43	0.43	21.46	17.52	10.24	1.77	11.02	10.04	1.69	0.59	42
11 12 25	15.16	5.12	5.51	4.17	1/2 UNC	0.47	M10	14.76	10.43	11.22	0.98	5.31	1.57	3.39	0.59	33
11 13 25	16.34	5.12	5.51	4.17	1/2 UNC	0.47	M10	25.39	17.52	11.22	0.79	10.63	6.50	3.39	0.59	55
11 14 25	17.13	5.12	5.51	4.17	1/2 UNC	0.47	M10	36.81	24.21	11.22	0.98	12.80	8.86	3.39	0.59	75
11 15 25	18.31	5.31	5.91	4.25	1/2 UNC	0.47	M10	48.23	31.30	11.61	0.98	17.72	13.78	3.39	0.59	115
11 22 25	17.52	6.30	7.09	5.20	1/2 UNC	0.47	M10	15.16	10.63	13.78	0.79	5.51	1.77	3.39	0.59	46
11 23 25	18.11	6.30	7.28	5.20	1/2 UNC	0.47	M10	25.59	17.91	14.17	1.77	10.63	7.68	3.39	0.59	77
11 24 25	18.90	6.30	7.28	5.20	1/2 UNC	0.47	M10	37.20	25.00	14.17	1.77	12.60	9.65	3.39	0.59	106
11 25 25	20.87	6.50	7.68	5.35	1/2 UNC	0.47	M10	47.83	31.89	14.57	0.98	18.11	14.37	3.39	0.59	165
11 32 25	17.52	6.69	7.48	5.20	5/8 UNC	0.47	M10	15.35	10.83	14.17	0.39	6.50	1.18	4.41	0.79	60
11 33 25	19.29	6.69	7.48	5.20	5/8 UNC	0.47	M10	26.57	18.50	14.17	2.76	10.24	7.09	4.33	0.79	95
11 34 23	21.46	7.28	8.27	5.91	5/8 UNC	0.47	M10	37.80	25.39	14.57	1.57	14.57	10.24	4.33	0.79	146
11 35 23	24.21	7.48	8.66	6.10	5/8 UNC	0.47	M10	48.82	32.28	14.57	1.57	18.31	14.17	4.33	0.79	232
11 42 25	19.69	7.28	8.66	5.91	3/4 UNC	0.63	M12	17.32	12.40	15.75	0.98	10.24	5.31	4.13	0.98	97
11 43 25	22.44	7.28	8.66	5.91	3/4 UNC	0.63	M12	29.13	19.49	16.14	4.33	9.84	8.27	4.13	0.98	146
11 44 23	24.02	7.28	8.66	5.91	3/4 UNC	0.63	M12	40.94	26.57	16.14	2.17	14.57	10.83	4.13	0.98	190
11 45 23	26.18	7.48	9.45	6.10	3/4 UNC	0.63	M12	50.59	33.66	16.54	2.56	21.26	17.91	4.13	0.98	320
11 52 25	23.23	9.06	10.63	7.48	1 UNC	0.78	M16	18.50	13.58	19.29	1.18	8.27	2.76	4.53	1.18	161
11 53 25	27.95	9.06	10.63	7.48	1 UNC	0.78	M16	30.31	20.28	19.29	4.13	11.22	8.46	4.96	1.18	253
11 54 25	29.33	9.06	11.22	7.48	1 UNC	0.78	M16	43.50	27.76	19.29	2.95	16.14	12.20	4.96	1.18	350
11 55 25	33.27	9.06	11.22	7.48	1 UNC	0.78	M16	55.31	34.65	19.29	2.36	20.87	16.34	5.31	1.18	467
11 62 25	28.54	10.83	13.19	9.06	1 1/4 UNC	0.98	M16	21.85	16.54	22.83	1.57	9.45	3.35	5.71	1.38	295
11 63 25	32.09	10.83	13.19	9.06	1 1/4 UNC	0.98	M16	35.43	22.24	22.83	6.30	11.81	10.24	5.71	1.38	403
11 64 25	33.27	10.83	13.58	9.06	1 1/4 UNC	0.98	M16	50.59	29.53	23.62	5.91	13.98	12.20	5.87	1.38	582
11 65 25	34.84	10.83	13.58	9.06	1 1/4 UNC	0.98	M16	64.17	36.42	23.62	4.72	18.11	14.96	5.87	1.38	743
11 66 25	45.08	11.02	13.58	9.13	1 1/4 UNC	0.98	M16	79.92	52.36	23.62	6.10	25.59	23.62	5.87	1.38	1090
11 72 25	30.71	11.81	14.96	9.92	1 1/2 UNC	1.37	M20	24.02	17.91	25.59	1.97	11.22	4.33	6.69	1.77	430
11 73 25	33.46	11.81	14.96	9.92	1 1/2 UNC	1.37	M20	37.20	25.00	25.59	5.51	11.81	8.07	6.69	1.77	578
11 74 25	39.37	11.81	15.75	9.92	1 1/2 UNC	1.37	M20	54.13	30.91	25.59	7.68	15.75	14.17	7.05	1.77	833
11 75 25	45.67	12.01	15.75	10.08	1 1/2 UNC	1.37	M20	67.32	38.39	25.98	2.56	26.18	19.29	7.24	1.77	1213
11 76 25	50.20	12.01	15.75	10.08	1 1/2 UNC	1.37	M20	84.65	56.10	25.98	8.27	27.95	26.57	7.24	1.77	1520
11 82 25	32.09	12.60	15.35	10.08	1 3/4 UNC	1.37	M20	27.76	23.03	25.59	1.97	12.99	4.53	7.87	1.97	580
11 83 25	37.20	12.60	15.35	10.08	1 3/4 UNC	1.37	M20	44.88	28.15	25.59	8.46	13.39	11.02	7.87	1.97	802
11 84 25	43.70	12.60	15.75	10.08	1 3/4 UNC	1.37	M20	64.76	36.42	26.38	12.01	15.35	16.54	7.87	1.97	1122
11 85 25	47.24	12.60	16.54	10.08	1 3/4 UNC	1.37	M20	82.09	43.90	27.17	4.92	29.13	23.43	7.87	1.97	1612
11 86 25	49.61	12.80	16.54	10.24	1 3/4 UNC	1.37	M20	101.77	63.98	27.17	9.84	33.46	32.48	7.87	1.97	2130
11 92 25	34.06	13.78	17.13	10.87	2 UNC	1.37	M24	29.92	24.80	29.53	1.97	13.78	5.31	7.68	2.36	741
11 93 25	43.11	13.78	17.13	10.87	2 UNC	1.37	M24	46.85	30.91	29.53	9.84	13.98	12.80	7.68	2.36	1047
11 94 25	48.82	13.78	17.91	10.87	2 UNC	1.37	M24	68.31	37.80	30.31	14.96	14.96	18.90	7.68	2.36	1493
11 95 25	49.41	13.98	17.91	11.02	2 UNC	1.37	M24	85.04	42.91	30.31	9.84	23.03	22.44	7.68	2.36	1900
11 96 25	51.38	13.98	17.91	11.02	2 UNC	1.37	M24	106.30	63.78	30.31	11.42	31.50	32.28	7.68	2.36	2490

Order details:
constant hanger
type 11 .. ..
marking: ...
set load: ...lbs
travel: ...inch up/down
blocking position
(as required): ...inch

Support brackets Type 71 for constant hangers Type 11

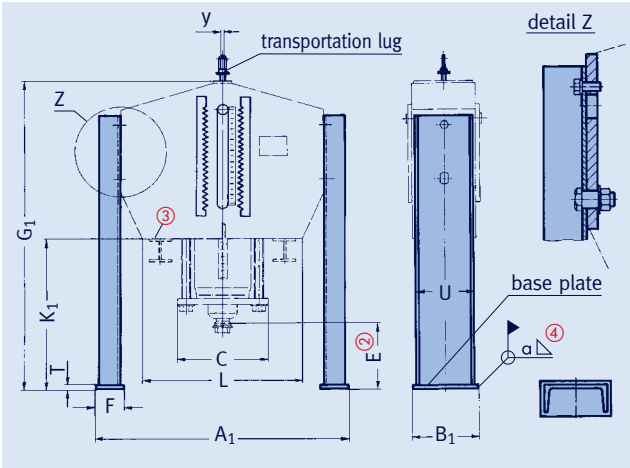

Support brackets for constant hangers type 11 type 71 C3 .1 to 71 96 .1
Serialized standard design, delivery from stock.

Material:
base plates of brackets:
plate SA299 / SA516Gr.60

constant h. type	bracket type①	A_1	B_1	C	E②	F	G_1	K_1	L	T	U	y	a④	weight [lbs]
11 C3 29	71 C3 .1	16.54	2.76	5.91	10.43	1.57	31.89	13.98	9.84	0.24	2.36	0.51	3/16	11
11 D2 29	71 D2 .1	14.57	2.76	6.10	5.71	1.57	20.08	10.24	9.06	0.24	2.36	0.51	3/16	11
11 D3 29	71 D3 .1	18.90	2.76	6.69	10.43	1.57	32.48	14.96	10.24	0.24	2.36	0.51	3/16	18
11 12 25	71 12 .1	19.49	4.53	5.51	5.71	2.36	21.06	10.63	11.22	0.31	3.94	0.67	3/16	26
11 13 25	71 13 .1	20.67	4.53	5.51	10.43	2.36	36.42	18.90	11.22	0.31	3.94	0.67	3/16	37
11 14 25	71 14 .1	21.46	4.53	5.51	15.16	2.36	52.56	28.35	11.22	0.31	3.94	0.67	3/16	55
11 15 25	71 15 .1	22.64	4.53	5.91	19.88	2.36	68.70	37.40	11.61	0.31	3.94	0.67	3/16	68
11 22 25	71 22 .1	22.64	5.51	7.09	5.71	2.95	21.46	10.83	13.78	0.31	4.72	0.67	3/16	33
11 23 25	71 23 .1	23.23	5.51	7.28	10.43	2.95	36.61	18.70	14.17	0.31	4.72	0.67	3/16	46
11 24 25	71 24 .1	24.02	5.51	7.28	15.16	2.95	52.95	27.95	14.17	0.31	4.72	0.67	3/16	68
11 25 25	71 25 .1	25.98	5.51	7.68	19.88	2.95	68.31	36.42	14.57	0.31	4.72	0.67	3/16	84
11 32 25	71 32 .1	22.64	5.51	7.48	5.91	2.95	22.05	11.22	14.17	0.39	4.72	0.98	3/16	35
11 33 25	71 33 .1	24.41	5.51	7.48	10.63	2.95	37.99	19.49	14.17	0.39	4.72	0.98	3/16	51
11 34 23	71 34 .1	25.79	5.51	8.27	15.75	2.95	54.33	28.94	14.57	0.39	4.72	0.98	3/16	71
11 35 23	71 35 .1	28.54	5.51	8.66	20.47	2.95	70.08	37.80	14.57	0.39	4.72	0.98	3/16	88
11 42 25	71 42 .1	25.20	6.30	8.66	6.10	3.15	24.41	12.01	15.75	0.39	5.51	0.98	3/16	40
11 43 25	71 43 .1	27.95	6.30	8.66	10.83	3.15	40.94	21.46	16.14	0.39	5.51	0.98	3/16	64
11 44 23	71 44 .1	29.53	6.30	8.66	16.73	3.15	58.66	32.09	16.14	0.39	5.51	0.98	3/16	90
11 45 23	71 45 .1	31.69	6.30	9.45	23.62	3.15	75.20	41.54	16.54	0.39	5.51	0.98	3/16	108
11 52 25	71 52 .1	29.53	7.87	10.63	6.30	3.54	25.98	12.40	19.29	0.47	7.09	0.98	3/16	66
11 53 25	71 53 .1	34.25	7.87	10.63	11.02	3.54	42.52	22.24	19.29	0.47	7.09	0.98	3/16	93
11 54 25	71 54 .1	35.63	7.87	11.22	15.75	3.54	60.43	32.68	19.29	0.47	7.09	0.98	3/16	128
11 55 25	71 55 .1	39.57	7.87	11.22	20.47	3.54	76.97	42.32	19.29	0.47	7.09	0.98	3/16	159
11 62 25	71 62 .1	36.02	9.84	13.19	6.50	4.33	29.72	13.19	22.83	0.47	8.66	0.98	1/4	99
11 63 25	71 63 .1	39.57	9.84	13.19	11.22	4.33	48.03	25.79	22.83	0.47	8.66	0.98	1/4	137
11 64 25	71 64 .1	40.75	9.84	13.58	15.94	4.33	67.91	38.39	23.62	0.47	8.66	0.98	1/4	198
11 65 25	71 65 .1	42.32	9.84	13.58	20.67	4.33	86.22	49.80	23.62	0.47	8.66	0.98	1/4	247
11 66 25	71 66 .1	52.56	9.84	13.58	13.58	4.33	94.88	42.52	23.62	0.47	8.66	0.98	1/4	247
11 72 25	71 72 .1	38.58	10.63	14.96	6.89	4.53	32.68	14.76	25.59	0.59	9.45	0.98	1/4	123
11 73 25	71 73 .1	41.34	10.63	14.96	11.61	4.53	50.59	25.59	25.59	0.59	9.45	0.98	1/4	176
11 74 25	71 74 .1	47.24	10.63	15.75	16.34	4.53	72.24	41.34	25.59	0.59	9.45	0.98	1/4	234
11 75 25	71 75 .1	53.54	10.63	15.75	21.06	4.53	90.16	51.77	25.98	0.59	9.45	0.98	1/4	282
11 76 25	71 76 .1	58.07	10.63	15.75	11.02	4.53	97.44	41.34	25.98	0.59	9.45	0.98	1/4	282
11 82 25	71 82 .1	40.35	11.02	15.35	7.09	4.72	36.81	13.78	25.59	0.59	9.45	1.57	5/16	143
11 83 25	71 83 .1	45.47	11.00	15.35	11.81	4.72	58.66	30.51	25.59	0.59	9.45	1.57	5/16	201
11 84 25	71 84 .1	51.97	11.81	15.75	16.54	4.72	83.27	46.85	26.38	0.59	10.24	1.57	5/16	306
11 85 25	71 85 .1	55.51	12.60	16.54	21.26	4.72	105.31	61.42	27.17	0.59	11.02	1.57	5/16	406
11 86 25	71 86 .1	57.87	12.60	16.54	10.63	4.72	114.37	50.39	27.17	0.59	11.02	1.57	5/16	406
11 92 25	71 92 .1	43.50	11.81	17.13	7.48	5.51	39.76	14.96	29.53	0.79	10.24	1.57	5/16	181
11 93 25	71 93 .1	52.56	11.81	17.13	12.20	5.51	61.42	30.51	29.53	0.79	10.24	1.57	5/16	240
11 94 25	71 94 .1	58.27	12.60	17.91	16.93	5.51	87.60	49.80	30.31	0.79	11.02	1.57	5/16	357
11 95 25	71 95 .1	58.86	13.39	17.91	21.65	5.51	109.06	66.14	30.31	0.79	12.60	1.57	5/16	602
11 96 25	71 96 .1	60.83	13.39	17.91	10.24	5.51	118.90	55.12	30.31	0.79	12.60	1.57	5/16	602

① The 5th digit in the type designation denotes the design:
6 for support brackets, bolted, standard design,
8 for support brackets, bolted, for increased requirements.

② Dimension E for uppermost blocking position, in other positions E changes accordingly.

③ The constant hangers can in principle be directly seated and welded to the structure. Care must be taken to allow access to adjusting bolts and adjusting nut. If this is not possible, supports type 71 are appropriate.

④ Minimum weld seam (leg length).

Longer support brackets are available on request.

Order details:
constant hanger
type 11 .. ..
with support bracket
type 71 .. ..
marking: ...
set load: ...lbs
travel: ...inch up/down
blocking position
(as required): ...inch

Constant hangers
Types 12-14

Constant hangers
type 12 82 35 to 14 96 35
Standard design, multi-cell arrangement, delivery from stock.

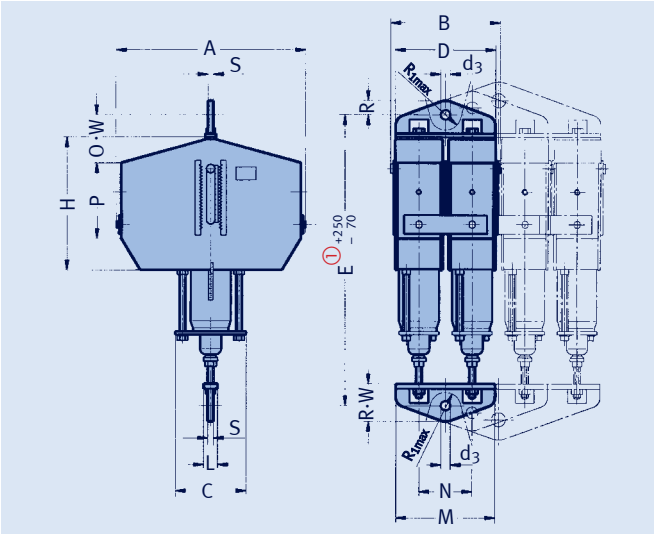

① Dimension E for uppermost blocking position, in other blocking positions E changes accordingly.

type	A	B	C	D	d_3	E①	H	L	M	N	O	P	R	R_{1max}	S	W	weight [lbs]
12 82 35	34.13	25.00	15.35	21.85	2.36	47.44	23.03	3.15	21.26	11.81	1.97	12.99	3.54	3.74	1.18	6.30	1355
12 83 35	39.25	25.00	15.35	21.85	2.36	64.57	28.15	3.15	21.26	11.81	8.46	13.39	3.54	3.74	1.18	6.30	1805
12 84 35	45.75	25.00	15.75	21.85	2.36	84.45	36.42	3.15	21.26	11.81	12.01	15.35	3.54	3.74	1.18	6.30	2450
12 85 35	49.29	25.00	16.54	21.85	2.36	101.77	43.90	3.15	21.26	11.81	4.92	29.13	3.54	3.74	1.18	6.30	3430
12 86 35	51.65	25.39	16.54	22.24	2.36	121.46	63.98	3.15	21.46	11.97	9.84	33.46	3.54	3.74	1.18	6.30	4455
12 92 35	36.10	27.36	17.13	23.82	2.76	51.57	24.80	3.54	23.23	12.99	1.97	13.78	4.13	4.33	1.38	6.89	1730
12 93 35	45.16	27.36	17.13	23.82	2.76	68.50	30.91	3.54	23.23	12.99	9.84	13.98	4.13	4.33	1.38	6.89	2355
12 94 35	50.87	27.36	17.91	23.82	2.76	89.96	37.80	3.54	23.23	12.99	14.96	14.96	4.13	4.33	1.38	6.89	3250
12 95 35	51.46	27.76	17.91	24.21	2.76	106.69	42.91	3.54	23.43	13.15	9.84	23.03	4.13	4.33	1.38	6.89	4070
12 96 35	53.43	27.76	17.91	24.21	2.76	127.95	63.78	3.54	23.43	13.15	11.42	31.50	4.13	4.33	1.38	6.89	5250
13 82 35	34.13	36.81	15.35	33.66	2.76	51.38	23.03	3.15	33.07	2x11.81	1.97	12.99	4.13	4.92	1.38	8.27	2110
13 83 35	39.25	36.81	15.35	33.66	2.76	68.50	28.15	3.15	33.07	2x11.81	8.46	13.39	4.13	4.92	1.38	8.27	2790
13 84 35	45.75	36.81	15.75	33.66	2.76	88.39	36.42	3.15	33.07	2x11.81	12.01	15.35	4.13	4.92	1.38	8.27	3750
13 85 35	49.29	36.81	16.54	33.66	2.76	105.71	43.90	3.15	33.07	2x11.81	4.92	29.13	4.13	4.92	1.38	8.27	5225
13 86 35	51.65	37.40	16.54	34.25	2.76	125.39	63.98	3.15	33.46	2x11.97	9.84	33.46	4.13	4.92	1.38	8.27	6770
13 92 35	36.10	40.35	17.13	36.81	3.15	55.91	24.80	3.54	36.22	2x12.99	1.97	13.78	4.72	5.51	1.38	9.06	2675
13 93 35	45.16	40.35	17.13	36.81	3.15	72.83	30.91	3.54	36.22	2x12.99	9.84	13.98	4.72	5.51	1.38	9.06	3610
13 94 35	50.87	40.35	17.91	36.81	3.15	94.29	37.80	3.54	36.22	2x12.99	14.96	14.96	4.72	5.51	1.38	9.06	4950
13 95 35	51.46	40.94	17.91	37.40	3.15	111.02	42.91	3.54	36.61	2x13.15	9.84	23.03	4.72	5.51	1.38	9.06	6190
13 96 35	53.43	40.94	17.91	37.40	3.15	132.28	63.78	3.54	36.61	2x13.15	11.42	31.50	4.72	5.51	1.38	9.06	7975
14 82 35	34.13	48.62	15.35	45.47	3.15	54.53	23.03	3.15	44.88	2x11.81	1.97	12.99	4.72	7.09	1.38	9.84	2870
14 83 35	39.25	48.62	15.35	45.47	3.15	71.65	28.15	3.15	44.88	3x11.81	8.46	13.39	4.72	7.09	1.38	9.84	3780
14 84 35	45.75	48.62	15.75	45.47	3.15	91.54	36.42	3.15	44.88	3x11.81	12.01	15.35	4.72	7.09	1.38	9.84	5070
14 85 35	49.29	48.62	16.54	45.47	3.15	108.86	43.90	3.15	44.88	3x11.81	4.92	29.13	4.72	7.09	1.38	9.84	7030
14 86 35	51.65	49.21	16.54	46.06	3.15	128.54	63.98	3.15	45.28	3x11.97	9.84	33.46	4.72	7.09	1.38	9.84	9095
14 92 35	36.10	53.35	17.13	49.80	3.54	57.48	24.80	3.54	49.21	3x12.99	1.97	13.78	5.31	7.09	1.57	9.84	3670
14 93 35	45.16	53.35	17.13	49.80	3.54	74.41	30.91	3.54	49.21	3x12.99	9.84	13.98	5.31	7.09	1.57	9.84	4920
14 94 35	50.87	53.35	17.91	49.80	3.54	95.87	37.80	3.54	49.21	3x12.99	14.96	14.96	5.31	7.09	1.57	9.84	6710
14 95 35	51.46	54.13	17.91	50.39	3.54	112.60	42.91	3.54	49.61	3x13.15	9.84	23.03	5.31	7.09	1.57	9.84	8360
14 96 35	53.43	54.13	17.91	50.39	3.54	133.86	63.78	3.54	49.61	3x13.15	11.42	31.50	5.31	7.09	1.57	9.84	10740

Order details:
constant hanger
type 1. .. 35
marking: ...
set load: ...lbs
travel: ...inch up/down
blocking position
(as required): ...inch

Constant hangers Type 12–14 with support brackets

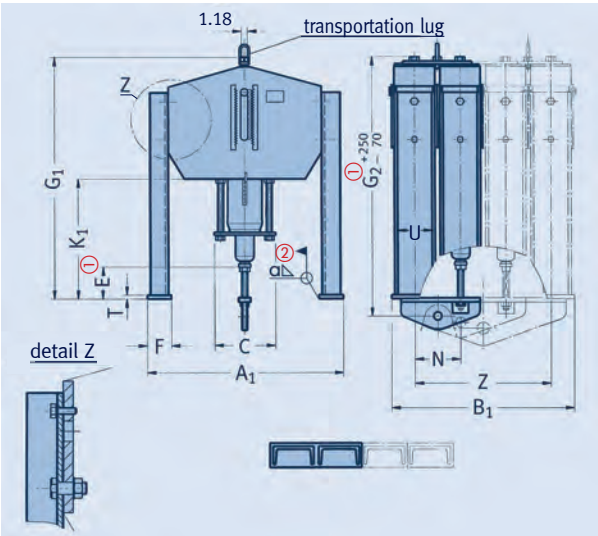

Constant hangers type 12–14 with support brackets type 12 82 45 to 14 96 45
Standard design, delivery from stock.

Material:
base plates of brackets: plate SA299 / SA516Gr.60

type	A_1	B_1	C	E①	F	G_1	$G_2$①	K_1	N	T	U	Z	a②	weight [lbs]
12 82 45	40.35	22.83	15.35	7.09	4.72	38.78	43.11	13.78	11.81	0.59	9.45	11.81	1/4	1559
12 83 45	45.47	22.83	15.35	11.81	4.72	60.63	60.24	30.51	11.81	0.59	9.45	11.81	1/4	2125
12 84 45	51.97	23.62	15.75	16.54	4.72	85.63	80.31	46.85	11.81	0.59	10.24	11.81	1/4	3042
12 85 45	55.51	24.41	16.54	21.26	4.72	107.48	97.64	61.42	11.81	0.59	11.02	11.81	1/4	4191
12 86 45	57.87	24.41	16.54	10.63	4.72	116.54	117.32	50.39	11.97	0.59	11.02	11.97	1/4	5194
12 92 45	43.50	24.80	17.13	7.48	5.51	42.13	46.85	14.96	12.99	0.79	10.24	12.99	5/16	1999
12 93 45	52.56	24.80	17.13	12.20	5.51	63.58	63.78	30.51	12.99	0.79	10.24	12.99	5/16	2738
12 94 45	58.27	25.59	17.91	16.93	5.51	89.96	85.43	49.80	12.99	0.79	11.02	12.99	5/16	3863
12 95 45	58.86	26.57	17.91	21.65	5.51	111.42	102.17	66.14	13.15	0.79	12.60	13.15	5/16	5193
12 96 45	60.83	26.57	17.91	10.24	5.51	121.26	123.43	55.12	13.15	0.79	12.60	13.15	5/16	6375
13 82 45	40.35	34.65	15.35	7.09	4.72	38.78	45.08	13.78	11.81	0.59	9.45	23.62	1/4	2396
13 83 45	45.47	34.65	15.35	11.81	4.72	61.02	62.40	30.51	11.81	0.59	9.45	23.62	1/4	3228
13 84 45	51.97	35.43	15.75	16.54	4.72	85.63	82.28	46.85	11.81	0.59	10.24	23.62	1/4	4506
13 85 45	55.51	36.22	16.54	21.26	4.72	107.48	99.61	61.42	11.81	0.59	11.02	23.62	1/4	6279
13 86 45	57.87	36.22	16.54	10.63	4.72	116.54	119.29	50.39	11.97	0.59	11.02	23.94	1/4	7837
13 92 45	43.50	37.80	17.13	7.48	5.51	42.13	49.02	14.96	12.99	0.79	10.24	25.98	5/16	3038
13 93 45	52.56	37.80	17.13	12.20	5.51	63.78	66.14	30.51	12.99	0.79	10.24	25.98	5/16	4151
13 94 45	58.27	38.58	17.91	16.93	5.51	89.96	87.60	49.80	12.99	0.79	11.02	25.98	5/16	5835
13 95 45	58.86	39.76	17.91	21.65	5.51	111.42	104.33	66.14	13.15	0.79	12.60	26.30	5/16	7830
13 96 45	60.83	39.76	17.91	10.24	5.51	121.26	125.59	55.12	13.15	0.79	12.60	26.30	5/16	9578
14 82 45	40.35	46.46	15.35	7.09	4.72	38.98	46.85	13.78	11.81	0.59	9.45	35.43	1/4	3230
14 83 45	45.47	46.46	15.35	11.81	4.72	61.02	63.98	30.51	11.81	0.59	9.45	35.43	1/4	4344
14 84 45	51.97	47.24	15.75	16.54	4.72	85.63	83.86	46.85	11.81	0.59	10.24	35.43	1/4	6051
14 85 45	55.51	48.03	16.54	21.26	4.72	107.48	101.18	61.42	11.81	0.59	11.02	35.43	1/4	8415
14 86 45	57.87	48.43	16.54	10.63	4.72	116.54	120.87	50.39	11.97	0.59	11.02	35.91	1/4	10486
14 92 45	43.50	50.79	17.13	7.48	5.51	42.32	50.00	14.96	12.99	0.79	10.24	38.98	5/16	4114
14 93 45	52.56	50.79	17.13	12.20	5.51	63.78	66.93	30.51	12.99	0.79	10.24	38.98	5/16	5599
14 94 45	58.27	51.57	17.91	16.93	5.51	89.96	88.39	49.80	12.99	0.79	11.02	38.98	5/16	7846
14 95 45	58.86	52.76	17.91	21.65	5.51	111.42	105.12	66.14	13.15	0.79	12.60	39.45	5/16	10508
14 96 45	60.83	52.76	17.91	10.24	5.51	121.26	126.38	55.12	13.15	0.79	12.60	39.45	5/16	12877

① Dimensions E and G_2 for uppermost blocking position, in other blocking positions E and G_2 changes accordingly.

② Minimum weld seam (leg length).

Other lengths are also available on request.

Order details:
constant hanger with support brackets
type 1. .. ..
marking: ...
set load: ...lbs
travel: ...inch up/down
blocking position (as required): ...inch

Constant hangers Type 18

Constant hangers
type 18 D3 37 to 18 93 37
Standard design,
delivery from stock.

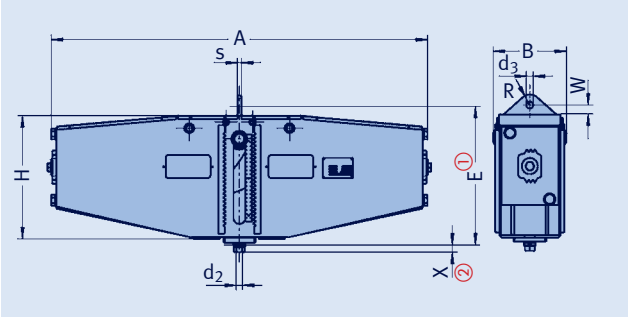

① Dimension E for uppermost blocking position, in other blocking positions E lengthens accordingly.

② X = minimum thread engagement depth.
At lower connection max. thread engagement depth = X + 5.91 inch [= X + 150mm].

Max. permissible loads:
- Emergency (C) at 176°F [80°C] = set load x 1.33
- Faulted condition (D) at 302°F [150°C] = set load x 1.66
- Max. load in a blocked state at 176°F [80°C] = set load x 1.5.

type	min. load [lbs]	max. load [lbs]	travel	A	B	d_2	d_3	E①	H	R	s	W	X②	weight [lbs]
18 D3 37	47	114	11.81	38.31	8.07	3/8 UNC	0.67	18.27	16.93	0.98	0.39	0.94	0.59	112
18 D1 47	47	161	2.95	24.02	8.07	3/8 UNC	0.67	10.51	9.21	0.98	0.39	0.94	0.59	68
18 D2 47	47	161	5.91	26.14	8.07	3/8 UNC	0.67	11.97	10.63	0.98	0.39	0.94	0.59	77
18 D3 47	83	161	11.81	38.31	8.07	3/8 UNC	0.67	18.27	16.93	0.98	0.39	0.94	0.59	117
18 11 47	121	384	2.95	24.02	8.07	1/2 UNC	0.67	10.51	9.21	0.98	0.39	0.94	0.59	71
18 12 47	121	384	5.91	26.14	8.07	1/2 UNC	0.67	11.97	10.63	0.98	0.39	0.94	0.59	79
18 13 47	121	384	11.81	38.31	8.07	1/2 UNC	0.67	18.27	16.93	0.98	0.39	0.94	0.59	130
18 21 37	281	674	2.95	24.02	8.07	1/2 UNC	0.67	10.51	9.21	0.98	0.39	0.94	0.59	71
18 22 37	281	674	5.91	26.14	8.07	1/2 UNC	0.67	11.97	10.63	0.98	0.39	0.94	0.59	88
18 23 37	281	674	11.81	38.31	8.07	1/2 UNC	0.67	18.27	16.93	0.98	0.39	0.94	0.59	130
18 21 47	494	899	2.95	24.02	8.07	1/2 UNC	0.67	10.51	9.21	0.98	0.39	0.94	0.59	71
18 22 47	494	899	5.91	26.14	8.07	1/2 UNC	0.67	11.97	10.63	0.98	0.39	0.94	0.59	88
18 23 47	494	899	11.81	38.31	8.07	1/2 UNC	0.67	18.27	16.93	0.98	0.39	0.94	0.59	130
18 31 37	629	1157	2.95	25.67	8.07	5/8 UNC	0.83	11.10	9.61	1.18	0.39	1.42	0.79	84
18 32 37	629	1157	5.91	32.95	9.17	5/8 UNC	0.83	13.23	11.54	1.18	0.39	1.42	0.79	168
18 33 37	629	1157	11.81	43.27	9.17	5/8 UNC	0.83	19.02	17.32	1.18	0.39	1.42	0.79	220
18 31 47	854	1528	2.95	25.67	8.07	5/8 UNC	0.83	11.10	9.61	1.18	0.39	1.42	0.79	84
18 32 47	854	1528	5.91	32.95	9.17	5/8 UNC	0.83	13.23	11.54	1.18	0.39	1.42	0.79	168
18 33 47	854	1528	11.81	43.27	9.17	5/8 UNC	0.83	19.02	17.32	1.18	0.39	1.42	0.79	223
18 41 37	1124	2090	2.95	29.72	9.17	3/4 UNC	0.83	12.91	11.26	1.18	0.39	1.42	0.98	159
18 42 37	1124	2090	5.91	36.77	10.28	3/4 UNC	0.83	13.82	11.89	1.18	0.39	1.42	0.98	231
18 43 37	1124	2090	11.81	43.27	9.17	3/4 UNC	0.83	18.98	17.32	1.18	0.39	1.42	0.98	236
18 41 47	1551	2787	2.95	29.72	9.17	3/4 UNC	0.98	13.03	11.26	1.57	0.59	1.26	0.98	159
18 42 47	1551	2787	5.91	36.77	10.28	3/4 UNC	0.98	13.94	11.89	1.57	0.59	1.26	0.98	258
18 43 47	1551	2787	11.81	50.71	10.28	3/4 UNC	0.98	19.69	17.91	1.57	0.59	1.26	0.98	348
18 51 37	2068	3641	2.95	29.72	9.17	1 UNC	0.98	12.99	11.26	1.57	0.59	1.26	1.18	161
18 52 37	2068	3641	5.91	36.77	10.28	1 UNC	0.98	13.90	11.89	1.57	0.59	1.26	1.18	260
18 53 37	2068	3641	11.81	50.71	10.28	1 UNC	0.98	19.65	17.91	1.57	0.59	1.26	1.18	351
18 51 47	2675	4923	2.95	31.97	10.28	1 UNC	0.98	13.15	11.42	1.57	0.59	1.26	1.18	218
18 52 47	2675	4923	5.91	41.54	10.87	1 UNC	0.98	14.65	12.40	1.57	0.59	1.34	1.18	366
18 53 47	2675	4923	11.81	56.14	10.87	1 UNC	0.98	20.00	18.11	1.57	0.59	1.34	1.18	487
18 61 37	3630	6721	2.95	34.57	10.28	1 1/4 UNC	1.34	14.09	12.40	1.97	0.71	1.34	1.38	262
18 62 37	3630	6721	5.91	44.88	11.46	1 1/4 UNC	1.34	14.96	13.11	1.97	0.71	1.34	1.38	443
18 63 37	3630	6721	11.81	62.68	11.46	1 1/4 UNC	1.34	20.24	18.39	1.97	0.71	1.34	1.38	602
18 61 47	4968	9104	2.95	34.57	10.28	1 1/4 UNC	1.61	14.49	12.40	2.56	0.79	1.73	1.38	271
18 62 47	4968	9104	5.91	51.26	10.94	1 1/4 UNC	1.61	15.43	13.19	2.56	0.79	1.73	1.38	452
18 63 47	4968	9104	11.81	67.72	11.89	1 1/4 UNC	1.61	20.75	18.58	2.56	0.79	1.73	1.38	756
18 71 37	6699	10566	2.95	38.43	10.87	1 1/2 UNC	1.61	15.55	13.39	2.56	0.79	1.73	1.77	362
18 72 37	6699	10566	5.91	56.93	11.46	1 1/2 UNC	1.61	15.67	13.50	2.56	0.79	1.73	1.77	534
18 73 37	6699	10566	11.81	67.72	11.89	1 1/2 UNC	1.61	22.76	18.58	2.56	0.79	1.73	1.77	787
18 71 47	7868	13489	2.95	42.20	11.46	1 1/2 UNC	1.61	16.42	14.25	2.56	0.87	1.73	1.77	443
18 72 47	7868	13489	5.91	61.81	11.89	1 1/2 UNC	1.61	16.73	14.57	2.56	0.87	1.73	1.77	690
18 73 47	7868	13489	11.81	76.18	14.25	1 1/2 UNC	1.61	22.48	20.20	2.56	0.87	1.73	1.77	1177
18 81 37	9936	17985	2.95	49.25	11.89	1 3/4 UNC	2.01	18.19	15.35	3.15	0.98	2.52	1.97	624
18 82 37	9936	17985	5.91	71.06	14.25	1 3/4 UNC	2.01	19.13	16.26	3.15	0.98	2.52	1.97	1142
18 83 37	9936	17985	11.81	77.36	13.66	1 3/4 UNC	2.01	24.45	21.54	3.15	0.98	2.52	1.97	1598
18 91 37	13263	22481	2.95	59.84	11.89	2 UNC	2.01	17.99	15.16	3.15	0.98	2.52	2.36	732
18 92 37	13263	22481	5.91	71.06	14.25	2 UNC	2.01	19.13	16.26	3.15	0.98	2.52	2.36	1146
18 93 37	13263	22481	11.81	77.36	13.66	2 UNC	2.01	24.45	21.54	3.15	0.98	2.52	2.36	1667

Order details:
constant hanger
type 18 .. ..
marking: ...
set load: ...lbs
travel: ...inch up/down
blocking position
(as required): ...inch

Constant supports Type 19

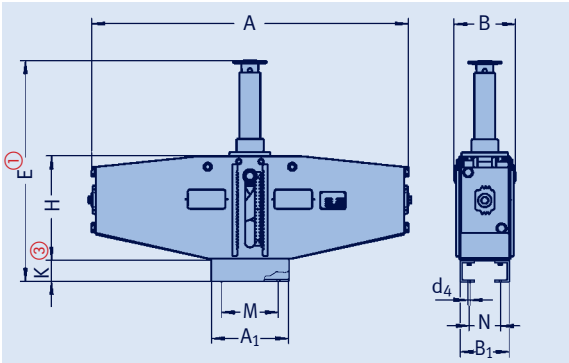

Constant supports type 19 D3 17 to 19 93 17
Standard design, delivery from stock.

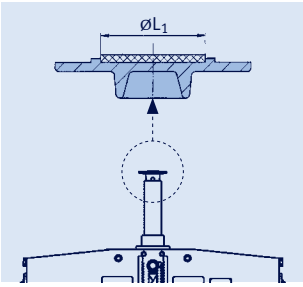

Load plate with integrated slide plate. This must be considered in the selection of clamp bases.

① Dimension E for uppermost blocking position, in other blocking positions E shortens accordingly and allows adjustment of +2.36 inch [+60mm].

② Type 19 .. .7 is fitted with a load plate with PTFE slide plate as standard. If needed, this type can also be supplied with a high temperature slide plate, type 19 .. .6 (see table below).

③ Under certain circumstances the support bracket with the height K can be dispensed with. It should however be ensured that the load adjustment bolts are accessible.

type②	min. load [lbs]	max. load [lbs]	travel	A	A_1	B	B_1	d_4	E①	H	K③	M	N	weight [lbs]
19 D3 17	47	114	11.81	38.31	9.65	8.07	6.42	0.57	35.94	16.93	3.15	7.28	4.06	130
19 D1 27	47	161	2.95	24.02	9.65	8.07	6.42	0.57	19.29	9.21	3.15	7.28	4.06	82
19 D2 27	47	161	5.91	26.14	9.65	8.07	6.42	0.57	23.62	10.63	3.15	7.28	4.06	93
19 D3 27	83	161	11.81	38.31	9.65	8.07	6.42	0.57	35.94	16.93	3.15	7.28	4.06	132
19 11 27	121	384	2.95	24.02	9.65	8.07	6.42	0.57	19.29	9.21	3.15	7.28	4.06	84
19 12 27	121	384	5.91	26.14	9.65	8.07	6.42	0.57	23.62	10.63	3.15	7.28	4.06	95
19 13 27	121	384	11.81	38.31	9.65	8.07	6.42	0.57	35.94	16.93	3.15	7.28	4.06	146
19 21 17	281	674	2.95	24.02	9.65	8.07	6.42	0.57	19.29	9.21	3.15	7.28	4.06	84
19 22 17	281	674	5.91	26.14	9.65	8.07	6.42	0.57	23.62	10.63	3.15	7.28	4.06	104
19 23 17	281	674	11.81	38.31	9.65	8.07	6.42	0.57	35.94	16.93	3.15	7.28	4.06	146
19 21 27	494	899	2.95	24.02	9.65	8.07	6.42	0.57	19.29	9.21	3.15	7.28	4.06	84
19 22 27	494	899	5.91	26.14	9.65	8.07	6.42	0.57	23.62	10.63	3.15	7.28	4.06	104
19 23 27	494	899	11.81	38.31	9.65	8.07	6.42	0.57	35.94	16.93	3.15	7.28	4.06	148
19 31 17	629	1157	2.95	25.67	9.65	8.07	6.42	0.57	19.65	9.61	3.15	7.28	4.06	95
19 32 17	629	1157	5.91	32.95	11.81	9.17	7.44	0.73	25.16	11.54	3.94	8.27	4.88	187
19 33 17	629	1157	11.81	43.27	11.81	9.17	7.44	0.73	38.15	17.32	3.94	8.27	4.88	247
19 31 27	854	1528	2.95	25.67	9.65	8.07	6.42	0.57	19.65	9.61	3.15	7.28	4.06	95
19 32 27	854	1528	5.91	32.95	11.81	9.17	7.44	0.73	25.16	11.54	3.94	8.27	4.88	187
19 33 27	854	1528	11.81	43.27	11.81	9.17	7.44	0.73	38.15	17.32	3.94	8.27	4.88	249
19 41 17	1124	2090	2.95	29.72	11.81	9.17	7.44	0.73	22.24	11.26	3.94	8.27	4.88	176
19 42 17	1124	2090	5.91	36.77	11.81	10.28	8.07	0.73	26.26	11.89	3.94	8.27	5.51	256
19 43 17	1124	2090	11.81	43.27	11.81	9.17	7.44	0.73	38.15	17.32	3.94	8.27	4.88	260
19 41 27	1551	2787	2.95	29.72	11.81	9.17	7.44	0.73	22.24	11.26	3.94	8.27	4.88	176
19 42 27	1551	2787	5.91	36.77	11.81	10.28	8.07	0.73	26.26	11.89	3.94	8.27	5.51	280
19 43 27	1551	2787	11.81	50.71	11.81	10.28	8.07	0.73	38.86	17.91	3.94	8.27	5.51	388
19 51 17	2068	3641	2.95	29.72	11.81	9.17	7.44	0.73	22.72	11.26	3.94	8.27	4.88	185
19 52 17	2068	3641	5.91	36.77	11.81	10.28	8.07	0.73	26.30	11.89	3.94	8.27	5.51	289
19 53 17	2068	3641	11.81	50.71	11.81	10.28	8.07	0.73	38.86	17.91	3.94	8.27	5.51	388
19 51 27	2675	4923	2.95	31.97	11.81	10.28	8.07	0.73	22.87	11.42	3.94	8.27	5.51	245
19 52 27	2675	4923	5.91	41.54	15.75	10.87	8.66	0.89	28.07	12.40	4.72	11.02	5.91	403
19 53 27	2675	4923	11.81	56.14	15.75	10.87	8.66	0.89	40.00	18.11	4.72	11.02	5.91	531
19 61 17	3630	6721	2.95	34.57	11.81	10.28	8.07	0.73	23.90	12.40	3.94	8.27	5.51	287
19 62 17	3630	6721	5.91	44.88	15.75	11.46	9.17	0.89	28.27	13.11	4.72	11.02	6.42	483
19 63 17	3630	6721	11.81	62.68	15.75	11.46	9.17	0.89	40.20	18.39	4.72	11.02	6.42	648
19 61 27	4968	9104	2.95	34.57	11.81	10.28	8.07	0.73	23.90	12.40	3.94	8.27	5.51	295
19 62 27	4968	9104	5.91	51.26	15.75	10.94	8.66	0.89	28.23	13.19	4.72	11.02	5.91	487
19 63 27	4968	9104	11.81	67.72	15.75	11.89	9.45	0.89	40.98	18.58	4.72	11.02	6.69	816
19 71 17	6699	10566	2.95	38.43	15.75	10.87	8.66	0.89	25.79	13.39	4.72	11.02	5.91	401
19 72 17	6699	10566	5.91	56.93	15.75	11.46	9.17	0.89	28.66	13.50	4.72	11.02	6.42	580
19 73 17	6699	10566	11.81	67.72	15.75	11.89	9.45	0.89	40.98	18.58	4.72	11.02	6.69	847
19 71 27	7868	13489	2.95	42.20	15.75	11.46	9.17	0.89	26.46	14.25	4.72	11.02	6.42	481
19 72 27	7868	13489	5.91	61.81	15.75	11.89	9.45	0.89	29.80	14.57	4.72	11.02	6.69	734
19 73 27	7868	13489	11.81	76.18	15.75	14.25	11.81	0.89	43.74	20.20	4.72	11.02	9.06	1246
19 81 17	9936	17985	2.95	49.25	15.75	11.89	9.45	0.89	29.29	15.35	4.72	11.02	6.69	668
19 82 17	9936	17985	5.91	71.06	15.75	14.25	11.81	0.89	32.64	16.26	4.72	11.02	9.06	1217
19 83 17	9936	17985	11.81	77.36	15.75	13.66	11.22	0.89	46.69	21.54	4.72	11.02	8.46	1706
19 91 17	13263	22481	2.95	59.84	15.75	11.89	9.45	0.89	29.09	15.16	4.72	11.02	6.69	776
19 92 17	13263	22481	5.91	71.06	15.75	14.25	11.81	0.89	32.64	16.26	4.72	11.02	9.06	1219
19 93 17	13263	22481	11.81	77.36	15.75	13.66	11.22	0.89	46.69	21.54	4.72	11.02	8.46	1773

The sliding surface of the mating component should be fitted with stainless steel plating.
This is indicated by the suffix "SP" in the type designation (e.g., clamp base type 49 22 25-SP).

Order details: constant support type 19 .. .., marking: ..., set load: ...lbs, travel: ...inch up/down, blocking position (as required): ...inch

type 19* with slide plate up to 356°F	up to 660°F	$øL_{1\ max.}$
19 D. .7	19 D. .6	1.57
19 1. .7	19 1. .6	1.57
19 2. .7	19 2. .6	1.57
19 3. .7	19 3. .6	2.56
19 4. .7	19 4. .6	2.56
19 5. .7	19 5. .6	2.56
19 6. .7	19 6. .6	4.33
19 7. .7	19 7. .6	5.91
19 8. .7	19 8. .6	5.91
19 9. .7	19 9. .6	5.91

* *friction value of the slide plates see table on page 7.11*

Max. permissible loads:
- Emergency (C) at 176°F [80°C] = set load x 1.33
- Faulted condition (D) at 302°F [150°C] = set load x 1.66.
- Max. load in a blocked state at 176°F [80°C] = set load x 1.5.

Revision 1 of page 1.20 edition September 2018

Angulating constant supports Type 19

Angulating constant supports type 19 D3 37 to 19 93 37
Standard design, delivery from stock.

For large horizontal displacements in the pipe systems the constant supports can be fitted with ball bushing joints.

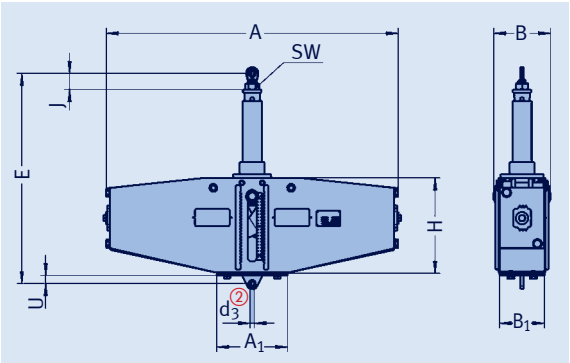

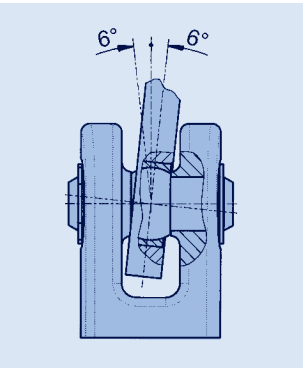

The ball bushing joints for the connection are designed to fit weld-on bracket type 35.

① Dimension E for uppermost blocking position, in other blocking positions E shortens accordingly and allows adjustment of +7.87inch [+200mm].

② Connection possibilities: See bolt diameter of weld-on brackets type 35 or dynamic clamps (product group 3).

Max. permissible loads:
- Emergency (C) at 176°F [80°C] = set load x 1.33
- Faulted condition (D) at 302°F [150°C] = set load x 1.66.
- Max. load in a blocked state at 176°F [80°C] = set load x 1.5.

type	min. load [lbs]	max. load [lbs]	travel	A	A_1	B	B_1	$d_3$②	E①	J	H	SW	U	weight [lbs]
19 D3 37	47	114	11.81	38.31	9.65	8.07	6.42	0.393	35.55	1.77	16.93	1.06	0.91	126
19 D1 47	47	161	2.95	24.02	9.65	8.07	6.42	0.393	18.90	1.77	9.21	1.06	0.91	77
19 D2 47	47	161	5.91	26.14	9.65	8.07	6.42	0.393	23.23	1.77	10.63	1.06	0.91	88
19 D3 47	83	161	11.81	38.31	9.65	8.07	6.42	0.393	35.55	1.77	16.93	1.06	0.91	128
19 11 47	121	384	2.95	24.02	9.65	8.07	6.42	0.393	18.90	1.77	9.21	1.06	0.91	79
19 12 47	121	384	5.91	26.14	9.65	8.07	6.42	0.393	23.23	1.77	10.63	1.06	0.91	90
19 13 47	121	384	11.81	38.31	9.65	8.07	6.42	0.393	35.55	1.77	16.93	1.06	0.91	143
19 21 37	281	674	2.95	24.02	9.65	8.07	6.42	0.472	19.29	2.09	9.21	1.34	0.98	82
19 22 37	281	674	5.91	26.14	9.65	8.07	6.42	0.472	23.62	2.09	10.63	1.34	0.98	99
19 23 37	281	674	11.81	38.31	9.65	8.07	6.42	0.472	35.94	2.09	16.93	1.34	0.98	143
19 21 47	494	899	2.95	24.02	9.65	8.07	6.42	0.472	19.29	2.09	9.21	1.34	0.98	82
19 22 47	494	899	5.91	26.14	9.65	8.07	6.42	0.472	23.62	2.09	10.63	1.34	0.98	99
19 23 47	494	899	11.81	38.31	9.65	8.07	6.42	0.472	35.94	2.09	16.93	1.34	0.98	146
19 31 37	629	1157	2.95	25.67	9.65	8.07	6.42	0.590	20.16	2.32	9.61	1.42	1.18	93
19 32 37	629	1157	5.91	32.95	11.81	9.17	7.44	0.590	24.88	2.32	11.54	1.42	1.18	183
19 33 37	629	1157	11.81	43.27	11.81	9.17	7.44	0.590	37.99	2.32	17.32	1.42	1.18	243
19 31 47	854	1528	2.95	25.67	9.65	8.07	6.42	0.590	20.16	2.32	9.61	1.42	1.18	95
19 32 47	854	1528	5.91	32.95	11.81	9.17	7.44	0.590	24.88	2.32	11.54	1.42	1.18	183
19 33 47	854	1528	11.81	43.27	11.81	9.17	7.44	0.590	37.99	2.32	17.32	1.42	1.18	245
19 41 37	1124	2090	2.95	29.72	11.81	9.17	7.44	0.590	22.09	2.32	11.26	1.42	1.18	172
19 42 37	1124	2090	5.91	36.77	11.42	10.28	8.07	0.590	26.10	2.32	11.89	1.42	1.18	251
19 43 37	1124	2090	11.81	43.27	11.81	9.17	7.44	0.590	37.99	2.32	17.32	1.42	1.18	258
19 41 47	1551	2787	2.95	29.72	11.81	9.17	7.44	0.590	22.09	2.32	11.26	1.42	1.18	174
19 42 47	1551	2787	5.91	36.77	11.42	10.28	8.07	0.590	26.10	2.32	11.89	1.42	1.18	276
19 43 47	1551	2787	11.81	50.71	11.42	10.28	8.07	0.590	38.66	2.32	17.91	1.42	1.18	386
19 51 37	2068	3641	2.95	29.72	11.81	9.17	7.44	0.787	23.98	3.15	11.26	2.36	1.57	190
19 52 37	2068	3641	5.91	36.77	11.42	10.28	8.07	0.787	27.56	3.15	11.89	2.36	1.57	293
19 53 37	2068	3641	11.81	50.71	11.42	10.28	8.07	0.787	40.16	3.15	17.91	2.36	1.57	392
19 51 47	2675	4923	2.95	31.97	11.42	10.28	8.07	0.787	24.13	3.15	11.42	2.36	1.57	247
19 52 47	2675	4923	5.91	41.54	15.75	10.87	8.66	0.787	28.62	3.15	12.40	2.36	1.57	406
19 53 47	2675	4923	11.81	56.14	15.75	10.87	8.66	0.787	40.55	3.15	18.11	2.36	1.57	534
19 61 37	3630	6721	2.95	34.57	11.81	10.28	8.07	0.787	25.24	3.15	12.40	2.36	1.57	293
19 62 37	3630	6721	5.91	44.88	15.75	11.46	8.66	0.787	28.82	3.15	13.11	2.36	1.57	485
19 63 37	3630	6721	11.81	62.68	15.75	11.46	8.66	0.787	40.75	3.15	18.39	2.36	1.57	650
19 61 47	4968	9104	2.95	34.57	11.81	10.28	8.07	0.787	25.24	3.15	12.40	2.36	1.57	300
19 62 47	4968	9104	5.91	51.26	15.75	10.94	8.66	0.787	28.78	3.15	13.19	2.36	1.57	489
19 63 47	4968	9104	11.81	67.72	15.75	11.89	8.66	0.787	41.65	3.15	18.58	2.36	1.57	820
19 71 37	6699	10566	2.95	38.43	15.75	10.87	8.66	1.181	27.87	3.66	13.39	2.36	2.36	410
19 72 37	6699	10566	5.91	56.93	15.75	11.46	9.17	1.181	30.75	3.66	13.50	2.36	2.36	589
19 73 37	6699	10566	11.81	67.72	14.96	11.89	9.45	1.181	43.07	3.66	18.58	2.36	2.36	858
19 71 47	7868	13489	2.95	42.20	15.67	11.46	9.17	1.181	28.54	3.66	14.25	2.36	2.36	489
19 72 47	7868	13489	5.91	61.81	15.75	11.89	9.45	1.181	31.89	3.66	14.57	2.36	2.36	745
19 73 47	7868	13489	11.81	76.18	15.75	14.25	11.81	1.181	45.51	3.66	20.20	2.36	2.36	1254
19 81 37	9936	17985	2.95	49.25	15.75	11.89	9.45	1.181	31.06	3.66	15.35	2.36	2.36	672
19 82 37	9936	17985	5.91	71.06	15.75	14.25	11.81	1.181	34.69	3.66	16.26	2.36	2.36	1232
19 83 37	9936	17985	11.81	77.36	15.75	13.66	11.22	1.181	48.74	3.66	21.54	2.36	2.36	1722
19 91 37	13263	22481	2.95	59.84	15.75	11.89	9.45	1.968	31.97	4.17	15.16	2.76	2.76	789
19 92 37	13263	22481	5.91	71.06	15.75	14.25	11.81	1.968	35.59	4.17	16.26	2.76	2.76	1246
19 93 37	13263	22481	11.81	77.36	15.75	13.66	11.22	1.968	49.65	4.17	21.54	2.76	2.76	1797

Order details:
angulating constant support type 19 .. ..
marking: ...
set load: ...lbs
travel: ...inch up/down
blocking position (as required): ...inch

Constant hanger trapezes Type 79

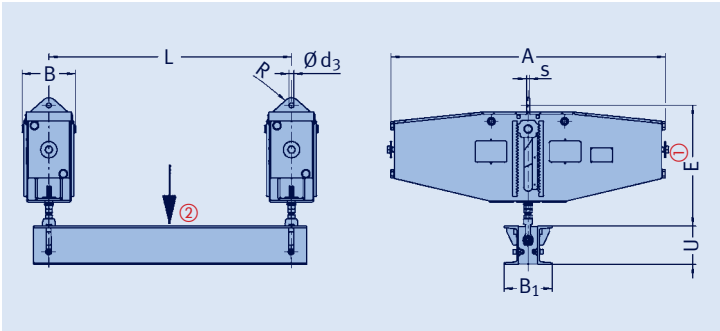

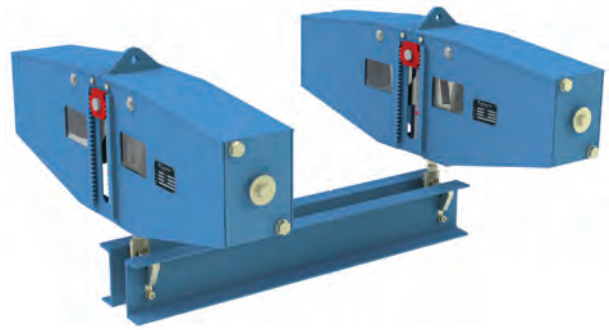

type	④ min. load [lbs]	④ max. load [lbs]	travel	L_{max}	A	B	d_3	E①	R	s	U	B_1	weight for ③ L=39¼ inch [lbs]	± per 4 inch [lbs]
79 D3 17	94	229	11.81	66.93	38.31	8.07	0.66	22.40	0.98	0.39	3.15	5.51	262	4
79 D1 27	94	323	2.95	66.93	24.02	8.07	0.66	14.65	0.98	0.39	3.15	5.51	179	4
79 D2 27	94	323	5.91	66.93	26.14	8.07	0.66	16.10	0.98	0.39	3.15	5.51	196	4
79 D3 27	166	323	11.81	66.93	38.31	8.07	0.66	22.40	0.98	0.39	3.15	5.51	271	4
79 11 27	242	768	2.95	66.93	24.02	8.07	0.66	15.47	0.98	0.39	3.15	5.51	179	4
79 12 27	242	768	5.91	66.93	26.14	8.07	0.66	16.93	0.98	0.39	3.15	5.51	196	4
79 13 27	242	768	11.81	66.93	38.31	8.07	0.66	23.23	0.98	0.39	3.15	5.51	298	4
79 21 17	562	1348	2.95	66.93	24.02	8.07	0.66	15.47	0.98	0.39	3.15	5.51	174	4
79 22 17	562	1348	5.91	66.93	26.14	8.07	0.66	16.93	0.98	0.39	3.15	5.51	209	4
79 23 17	562	1348	11.81	66.93	38.31	8.07	0.66	23.23	0.98	0.39	3.15	5.51	298	4
79 21 27	989	1798	2.95	66.93	24.02	8.07	0.66	15.47	0.98	0.39	3.15	5.51	174	4
79 22 27	989	1798	5.91	66.93	26.14	8.07	0.66	16.93	0.98	0.39	3.15	5.51	209	4
79 23 27	989	1798	11.81	66.93	38.31	8.07	0.66	23.23	0.98	0.39	3.15	5.51	298	4
79 31 17	1258	2315	2.95	70.87	25.67	8.07	0.82	16.14	1.18	0.39	4.72	7.48	229	6
79 32 17	1258	2315	5.91	70.87	32.95	9.17	0.82	18.27	1.18	0.39	4.72	7.48	397	6
79 33 17	1258	2315	11.81	70.87	43.27	9.17	0.82	24.06	1.18	0.39	4.72	7.48	503	6
79 31 27	1708	3057	2.95	70.87	25.67	8.07	0.82	16.14	1.18	0.39	4.72	7.48	229	6
79 32 27	1708	3057	5.91	70.87	32.95	9.17	0.82	18.27	1.18	0.39	4.72	7.48	397	6
79 33 27	1708	3057	11.81	70.87	43.27	9.17	0.82	24.06	1.18	0.39	4.72	7.48	507	6
79 41 17	2248	4181	2.95	70.87	29.72	9.17	0.82	18.58	1.18	0.39	5.51	7.87	392	7
79 42 17	2248	4181	5.91	70.87	36.77	10.28	0.82	19.21	1.18	0.39	5.51	7.87	538	7
79 43 17	2248	4181	11.81	70.87	43.27	9.17	0.82	24.65	1.18	0.39	5.51	7.87	547	7
79 41 27	3102	5575	2.95	70.87	29.72	9.17	0.98	18.70	1.57	0.59	5.51	7.87	392	7
79 42 27	3102	5575	5.91	70.87	36.77	10.28	0.98	19.33	1.57	0.59	5.51	7.87	591	7
79 43 27	3102	5575	11.81	70.87	50.71	10.28	0.98	25.35	1.57	0.59	5.51	7.87	772	7
79 51 17	4136	7283	2.95	70.87	29.72	9.17	0.98	19.25	1.57	0.59	7.09	9.06	428	10
79 52 17	4136	7283	5.91	70.87	36.77	10.28	0.98	20.16	1.57	0.59	7.09	9.06	626	10
79 53 17	4136	7283	11.81	70.87	50.71	10.28	0.98	25.91	1.57	0.59	7.09	9.06	807	10
79 51 27	5350	9846	2.95	70.87	31.97	10.28	0.98	19.41	1.57	0.59	7.09	9.06	542	10
79 52 27	5350	9846	5.91	70.87	41.54	10.87	0.98	20.51	1.57	0.59	7.09	9.06	838	10
79 53 27	5350	9846	11.81	70.87	56.14	10.87	0.98	26.26	1.57	0.59	7.09	9.06	1080	10
79 61 17	7261	13443	2.95	94.49	34.57	10.28	1.33	20.51	1.97	0.71	10.24	12.20	705	17
79 62 17	7261	13443	5.91	94.49	44.88	11.46	1.33	21.42	1.97	0.71	10.24	12.20	1063	17
79 63 17	7261	13443	11.81	94.49	62.68	11.46	1.33	26.69	1.97	0.71	10.24	12.20	1385	17
79 61 27	9936	18209	2.95	94.49	34.57	10.28	1.61	20.91	2.56	0.79	10.24	12.20	723	17
79 62 27	9936	18209	5.91	94.49	51.26	10.94	1.61	21.89	2.56	0.79	10.24	12.20	1085	17
79 63 27	9936	18209	11.81	94.49	67.72	11.89	1.61	27.17	2.56	0.79	10.24	12.20	1698	17
79 71 17	13398	21132	2.95	94.49	38.43	10.87	1.61	23.07	2.56	0.79	11.81	13.78	948	20
79 72 17	13398	21132	5.91	94.49	56.93	11.46	1.61	23.19	2.56	0.79	11.81	13.78	1292	20
79 73 17	13398	21132	11.81	94.49	67.72	11.89	1.61	30.28	2.56	0.79	11.81	13.78	1790	20
79 71 27	15736	26977	2.95	94.49	42.20	11.46	1.61	23.90	2.56	0.87	11.81	13.78	1111	20
79 72 27	15736	26977	5.91	94.49	61.81	11.89	1.61	24.29	2.56	0.87	11.81	13.78	1605	20
79 73 27	15736	26977	11.81	94.49	76.18	14.25	1.61	30.00	2.56	0.87	11.81	13.78	2579	20
79 81 17	19873	35969	2.95	70.87 ②	49.25	11.89	2.00	26.65	3.15	0.98	11.81	13.78	1482	20
79 82 17	19873	35969	5.91	70.87 ②	71.06	14.25	2.00	27.64	3.15	0.98	11.81	13.78	2518	20
79 83 17	19873	35969	11.81	70.87 ②	77.36	13.66	2.00	32.91	3.15	0.98	11.81	13.78	3426	20
79 91 17	26527	44961	2.95	70.87 ②	59.84	11.89	2.00	27.32	3.15	0.98	11.81	13.78	1680	20
79 92 17	26527	44961	5.91	70.87 ②	71.06	14.25	2.00	28.54	3.15	0.98	11.81	13.78	2509	20
79 93 17	26527	44961	11.81	70.87 ②	77.36	13.66	2.00	33.82	3.15	0.98	11.81	13.78	3554	20

Constant hanger trapezes type 79 D3 17 to 79 93 17

① Dimension E for uppermost blocking position, for other blocking positions E lengthens accordingly.

② The L_{max} dimensions can be lengthened to 94.49 inch [2400mm], on reduction of the permissible center load by 5% per 3.94 inch [100mm] extension.

③ When selecting the constant hanger trapeze the weight of the channels and the clamp base weight must be added to the operating load.

④ Max. permissible loads:
- Emergency (C) at 176°F [80°C] = set load x 1.33
- Faulted condition (D) at 302°F [150°C] = set load x 1.66.
- Max. load in a blocked state at 176°F [80°C] = set load x 1.5.

Order details:
trapeze type 79 .. ..
L = ...inch
marking: ...
set load: ...lbs
of the support point
trave: ...inch up/down
blocking position
(as required): ...inch

Constant hanger trapezes Type 79

Constant hanger trapezes types 79 D2 25 to 79 96 25
This design of trapeze is used if the standard design type 79 .2 34 does not fit due to extremely restricted installation space. The trapezes are supplied bolted ex works.

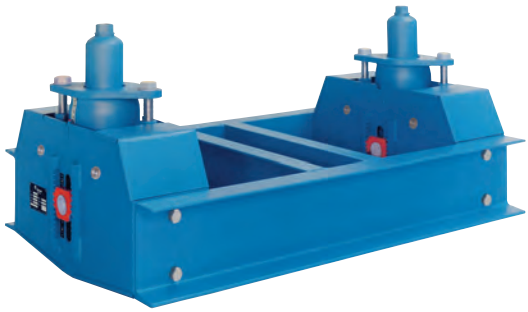

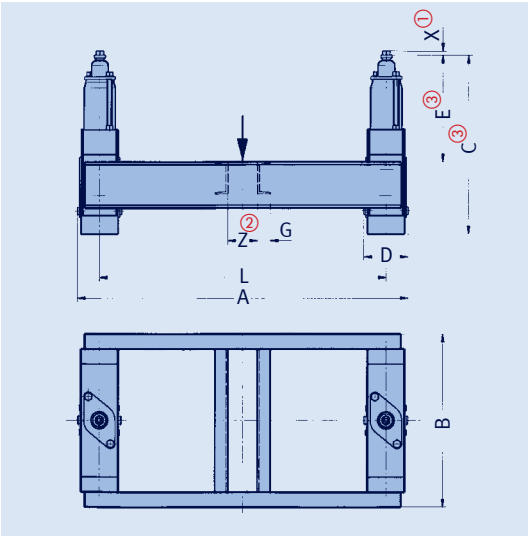

① X = min. thread engagement depth + 11.81 inch [+300mm] engagement possibility.

② Dimension L and dimension Z are to be stated when ordering.

③ Dimension E and dimension C at blocking position 0 inch [0mm], in other blocking positions E and C lengthens accordingly.

④ When selecting the constant hanger trapeze its total weight and the clamp base weight must be added to the operating load.

⑤ The L_{max} dimensions can be lengthened to 94.49 inch [2400mm] on load reduction by 5% per 3.94 inch [100mm] extension.

type	A_{max}	B	C③	D	E③	G	⑤ L_{max}	X①	total weight ④ [lbs] L=39¼ inch	weight change [lbs/inch]④
79 D2 25	47.64	12.80	14.37	4.33	7.09	0.59	43.31	0.59	66	0.4
79 D3 25	48.43	17.13	22.05	5.12	9.65	0.59	43.31	0.59	106	0.4
79 12 25	75.98	20.28	15.35	5.12	9.25	1.18	70.87	0.59	134	1.3
79 13 25	75.98	21.46	25.98	5.12	14.96	1.18	70.87	0.59	179	1.3
79 22 25	77.17	22.64	15.75	6.30	9.45	1.18	70.87	0.59	163	1.3
79 23 25	77.17	23.23	26.18	6.30	13.98	1.18	70.87	0.59	227	1.3
79 32 25	85.43	23.82	16.14	6.69	9.25	1.77	78.74	0.79	229	2.0
79 33 25	85.43	25.59	27.36	6.69	14.57	1.77	78.74	0.79	302	2.0
79 34 23	85.43	27.56	37.80	7.28	22.05	1.77	78.74	0.79	384	2.0
79 35 23	85.43	30.51	48.82	7.48	28.94	1.77	78.74	0.79	562	2.0
79 42 25	86.02	25.20	18.31	7.28	7.48	2.17	78.74	0.98	337	2.5
79 43 25	86.02	27.95	30.12	7.28	16.34	2.17	78.74	0.98	439	2.5
79 44 23	86.02	29.53	40.94	7.28	24.61	2.17	78.74	0.98	558	2.5
79 45 23	86.22	31.69	50.59	7.48	26.97	2.17	78.74	0.98	816	2.5
79 52 25	91.73	29.13	19.69	9.06	10.83	2.56	82.68	1.18	507	2.8
79 53 25	91.73	33.86	31.50	9.06	16.54	2.56	82.68	1.18	701	2.8
79 54 25	91.73	35.24	44.69	9.06	25.98	2.56	82.68	1.18	899	2.8
79 55 25	91.73	39.57	56.50	9.06	33.27	2.56	82.68	1.18	1164	3.3
79 62 25	93.50	35.24	23.23	10.83	12.40	2.76	82.68	1.38	847	3.7
79 63 25	93.50	38.78	36.81	10.83	18.90	2.76	82.68	1.38	1071	3.7
79 64 25	93.50	39.96	51.97	10.83	32.09	2.76	82.68	1.38	1433	3.7
79 65 25	93.50	41.54	65.55	10.83	42.72	2.76	82.68	1.38	1759	3.7
79 66 25	93.70	51.77	81.30	11.02	49.80	2.76	82.68	1.38	2470	3.7
79 72 25	94.49	38.19	25.79	11.81	12.60	3.35	82.68	1.77	1210	4.7
79 73 25	94.49	40.94	38.98	11.81	22.05	3.35	82.68	1.77	1517	4.7
79 74 25	94.49	47.24	55.91	11.81	32.28	3.35	82.68	1.77	2075	5.2
79 75 25	94.69	53.54	69.09	12.01	40.16	3.35	82.68	1.77	2858	5.2
79 76 25	94.69	58.07	86.42	12.01	50.20	3.35	82.68	1.77	3530	5.2
79 82 25	95.28	39.96	29.72	12.60	14.96	3.74	82.68	1.97	1645	6.7
79 83 25	95.28	45.08	46.85	12.60	25.59	3.74	82.68	1.97	2114	6.7
79 84 25	95.28	51.57	66.73	12.60	39.96	3.74	82.68	1.97	2784	6.7
79 85 25	95.28	55.12	84.06	12.60	50.20	3.74	82.68	1.97	3781	6.7
79 86 25	95.47	57.48	103.74	12.80	60.83	3.74	82.68	1.97	4830	6.7
79 92 25	96.46	41.93	32.28	13.78	16.93	3.94	82.68	2.36	2002	6.7
79 93 25	96.46	50.98	49.21	13.78	26.18	3.94	82.68	2.36	2661	6.7
79 94 25	96.46	56.69	70.67	13.78	41.54	3.94	82.68	2.36	3583	6.7
79 95 25	96.65	57.28	87.40	13.98	54.92	3.94	82.68	2.36	4403	6.7
79 96 25	96.65	59.25	108.66	13.98	66.14	3.94	82.68	2.36	5580	6.7

Order details:
trapeze type 79 .. ..
L = ...inch
Z = ...inch
marking: ...
set load: ...lbs
of the support point
travel: ...inch up/down
blocking position
(as required): ...inch

Heavy duty constant supports Type 16

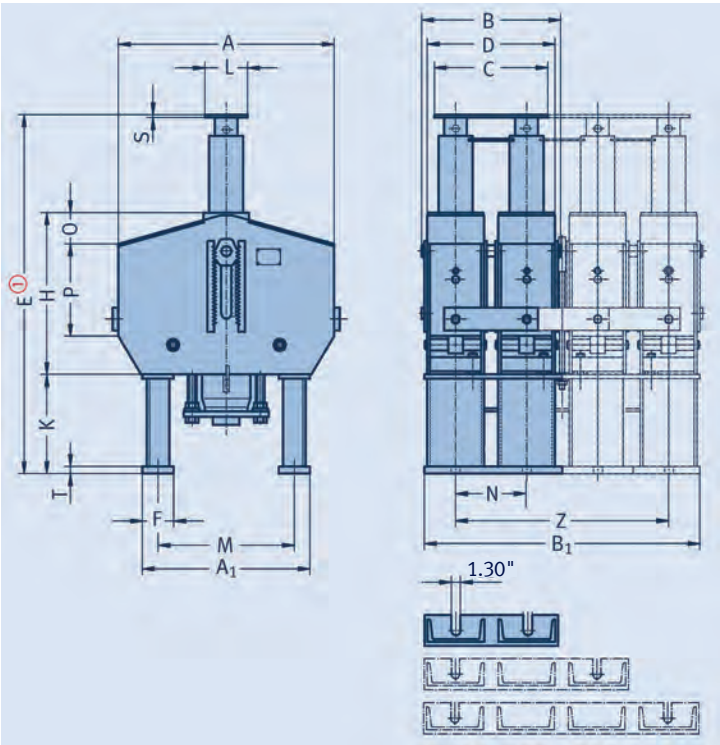

Heavy duty constant support types 16 82 29 to 16 93 49

type③	A	A_1	B	B_1	C	D	E①	E②	F	H	K	L	M	N	O	P	S	T	Z	weight [lbs]
16 82 29	34.13	25.20	25.00	22.83	19.69	21.85	44.09	44.57	4.72	23.03	11.81	7.87	19.29	11.81	1.97	12.99	0.59	0.59	11.81	1400
16 83 29	39.25	25.20	25.00	22.83	19.69	21.85	73.03	73.50	4.72	28.15	29.72	7.87	19.29	11.81	8.46	13.39	0.59	0.59	11.81	2028
16 92 29	36.10	29.13	27.36	24.80	22.44	23.82	46.85	47.32	5.51	24.80	12.60	9.45	22.44	12.99	1.97	13.78	0.79	0.79	12.99	1775
16 93 29	45.16	29.13	27.36	24.80	22.44	23.82	75.39	75.87	5.51	30.91	29.33	9.45	22.44	12.99	9.84	13.98	0.79	0.79	12.99	2568
16 82 39	34.13	25.20	36.81	34.65	31.50	33.66	44.09	44.57	4.72	23.03	11.81	7.87	19.29	11.81	1.97	12.99	0.59	0.59	23.62	2127
16 83 39	39.25	25.20	36.81	34.65	31.50	33.66	73.03	73.50	4.72	28.15	29.72	7.87	19.29	11.81	8.46	13.39	0.59	0.59	23.62	3075
16 92 39	36.10	29.13	40.35	37.80	35.43	36.81	46.85	47.32	5.51	24.80	12.60	9.45	22.44	12.99	1.97	13.78	0.79	0.79	25.98	2690
16 93 39	45.16	29.13	40.35	37.80	35.43	36.81	75.39	75.87	5.51	30.91	29.33	9.45	22.44	12.99	9.84	13.98	0.79	0.79	25.98	3891
16 82 49	34.13	25.20	48.62	46.46	43.31	45.47	44.09	44.57	4.72	23.03	11.81	7.87	19.29	11.81	1.97	12.99	0.59	0.59	35.43	2855
16 83 49	39.25	25.20	48.62	46.46	43.31	45.47	73.03	73.50	4.72	28.15	29.72	7.87	19.29	11.81	8.46	13.39	0.59	0.59	35.43	4112
16 92 49	36.10	29.13	53.35	50.79	48.43	49.80	46.85	47.32	5.51	24.80	12.60	9.45	22.44	12.99	1.97	13.78	0.79	0.79	38.98	3605
16 93 49	45.16	29.13	53.35	50.79	48.43	49.80	75.39	75.87	5.51	30.91	29.33	9.45	22.44	12.99	9.84	13.98	0.79	0.79	38.98	5214

① Dimension E for uppermost blocking position, in other blocking positions E shortens accordingly and allows adjustment of +2.36 inch [60mm].

② Dimension E for constant supports according to E ①, which are additionally fitted with a slide plate.

③ Type 16 .. .9 is supplied as standard with a corrosion protected load plate without a slide plate. If lateral movement occurs the use of sliding plates are recommended. Please note the table on the right.

When using slide plates the sliding surfaces of the mating components should be fitted with stainless steel plating.

This is indicated by the suffix 'SP' in the type designation (e.g., clamp base type 49 22 25-SP).

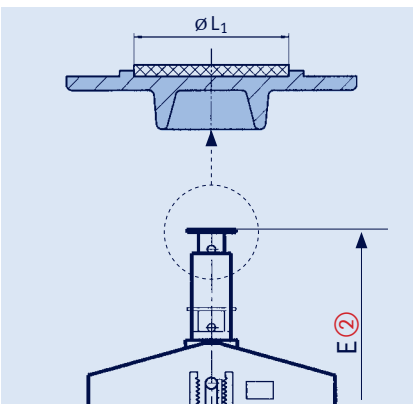

Load plate with integrated slide plate

type 16 with slide plate* up to 356°F	up to 660°F	øL_1
16 82 .7	16 82 .6	4.33
16 83 .7	16 83 .6	4.33
16 92 .7	16 92 .6	5.91
16 93 .7	16 93 .6	5.91

** Friction value of the slide plates see table on page 7.11.*

Order details:
constant support
type 16 .. ..
marking: ...
set load: ...lbs
travel: ...inch up/down
blocking position
(as required): ...inch

Servohangers Type 17

Under certain conditions, pipe systems or other components are restricted in their thermal displacement through friction or other influences, despite the use of spring and constant hangers or constant supports. In such cases servohangers can actively overcome the restriction.

Application

In standard cases, the weight of the pipe systems is practically in equilibrium with the set load of the constant hangers and constant supports. The sum of the deviations occurring and the additional stresses in the piping due to this then remain within the permissible harmless range.

In certain cases, the sum of the deviations occurring can also exceed a permissible level and considerably reduce the life of the piping systems or their connections (in the creep strength range) in the form of additional secondary stresses.

Deviations can arise through:

- **wall thickness tolerances of the piping, if these are not weighed extra and the weight differences taken into account**
- **insulation weights not determinable in advance**
- **mechanical friction and production tolerances for constant hangers (permissible +/– 5%)**
- **spring relaxation**
- **pipe statics that are not always readily determinable**
- **practical deviations from the theoretically planned load distribution**

A combination of deviations can cumulatively reach significant levels. These deviations have a particularly negative effect in flexible, 'soft' pipe systems. Vertical expansion can be obstructed or even completely suppressed here, even with relatively slight individual deviations.

Apart from the additional loads caused, impermissible sagging can result, due to spring hysteresis in the pressure-stressed system, with a reversed incline. In addition to possible creep rupture, in the event of an incorrectly positioned incline, dangerous water hammer can occur.

In such cases it would be advisable to supplement the passively reacting constant hangers with the active LISEGA servohangers.

Typical cases of application for LISEGA servohangers:

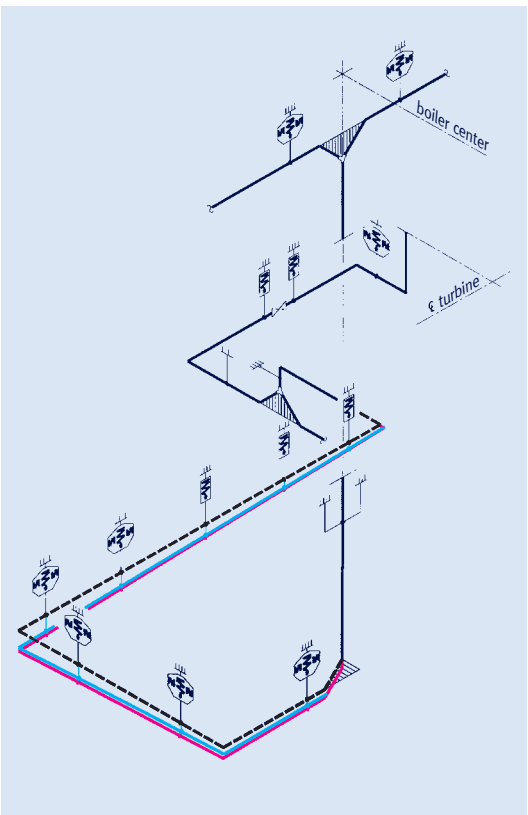

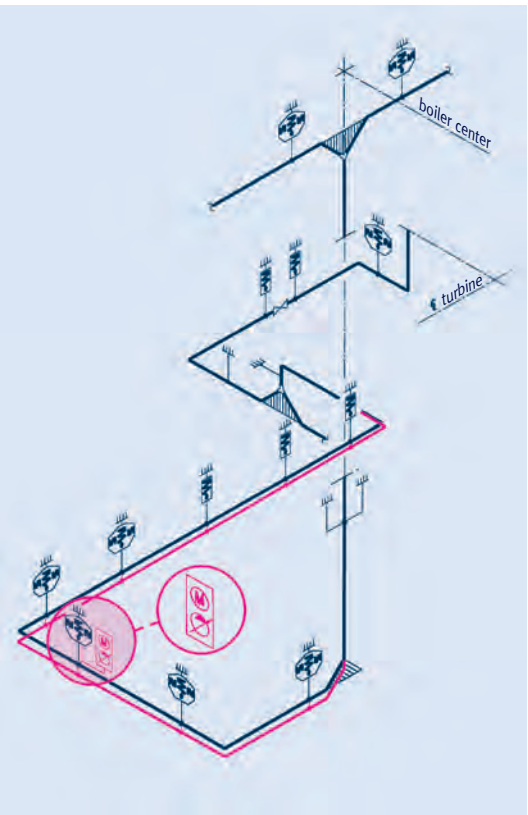

original cold position

hot position

new cold position

without servohangers (diagram on left) the pipe system remains in the hot position

with servohangers (diagram on right) the pipe system shifts to its specified positions

Through use of the hydraulic servo support the pipe system can now be repositioned to the specified elevation.

Design and mode of operation

The type 11 constant hanger forms the basis for the servohanger. To overcome load differences it is additionally fitted with an auxiliary hydraulic device that can exert an active supplementary force in both directions (servo support).

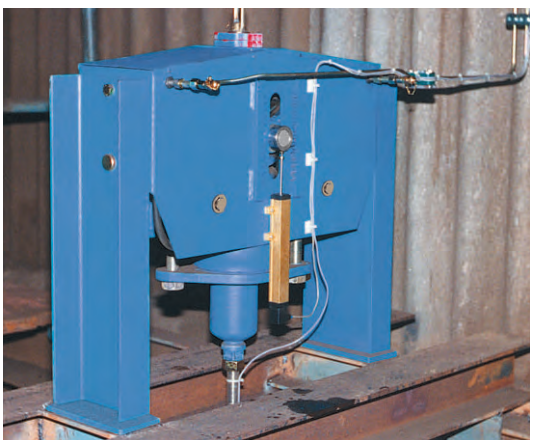

In standard cases, the temperature of the pipe system to be supported is used as a control parameter. The temperature in each case is transformed electronically into the corresponding travel position. In the theoretical / actual comparison procedure, the control ensures a regulated approach to the actual vertical elevation position.

Electro hydraulic control

The hydraulic unit and the control are located separately from each other in a separate switch cabinet situated near the servohanger (max. distance 52 feet [16m]).

The hydraulic pistons for control of the movement are located in the load tube of the constant hanger.

Safety switch

The electro hydraulic control is designed so that in the event of an operational breakdown (e.g. power loss) only the servo support is lost, but the unit will continue to function effectively as a constant hanger.

For theoretical (temp.) / actual (travel) deviations a tolerance range can be set. If the deviation is outside these values, the control switches off automatically.

Manual switch-off

For any maintenance work required on the system or the boiler, the servo support can be switched on or off manually.

Design sizes

Load Groups 5 (F_N 4496 lbs [20kN]) to 9 (F_N 22481 lbs [100kN]) with travel ranges 2 (5.91 inch [150mm]) and 3 (11.81 inch [300mm]) are considered standard. For other cases, special designs can be supplied.

Operating instructions

Installation and commissioning instructions, as well as servicing recommendations, are included in the scope of supply.

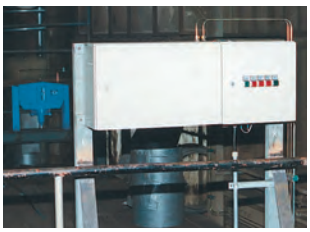

Servohanger switch cabinet

① For this, see also selection table constant hangers, pages 1.13 and 1.14.

② 2 = travel range 2
3 = travel range 3

servohanger type ②	nominal load F_N [lbs]	set load ① [lbs]	load-dependent travel ① travel range 2 [inch]	travel range 3 [inch]	additional servo force [lbs]
17 5. 25	4496	1800 – 4496	2.95 – 5.91	5.91 – 11.81	± 1800
17 6. 25	8992	3595 – 8992	2.95 – 5.91	5.91 – 11.81	± 4500
17 7. 25	13489	5395 – 13489	2.95 – 5.91	5.91 – 11.81	± 4500
17 8. 25	17985	7190 – 17985	2.95 – 5.91	5.91 – 11.81	± 4500
17 9. 25	22481	8992 – 22481	2.95 – 5.91	5.91 – 11.81	± 4500

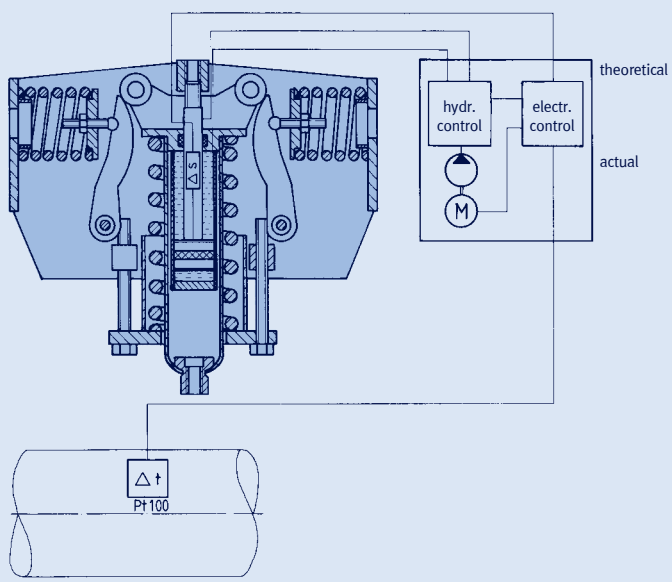

Function chart

Installation and operating instructions Types 11, 12-14, 18, 19

① blocking device
② guide pin
③ name plate
④ red marking for hot position
⑤ retaining bolt with washer for blocking device (after deblocking)
⑥ travel scale
⑦ blocking strip
⑧ indicator for set load
⑨ load scale
⑩ load adjustment hood
⑪ load adjustment bolt
⑫ load tube
⑬ inspection hole for min. thread engagement depth
⑭ adjusting nut (with swivel joint)

1 Transport and storage

During transport, care must be taken that connecting threads, blocking devices and load adjustment bolts are not damaged. When storing in the open air, the supports must be protected from dirt and water.

2 Delivery condition

If not otherwise agreed, LISEGA constant hangers are set to the desired cold load position (installation condition) and blocked. The adjustment values can be read off the load and travel scale as well as the name plate.

On the travel scale the theoretical hot position is marked with a red sticker and the theoretical cold position with a white one. At the delivery inspection the customer specified load set at the factory is permanently marked on the load scale with an "X". The reading is made at the level of the guide pin center.

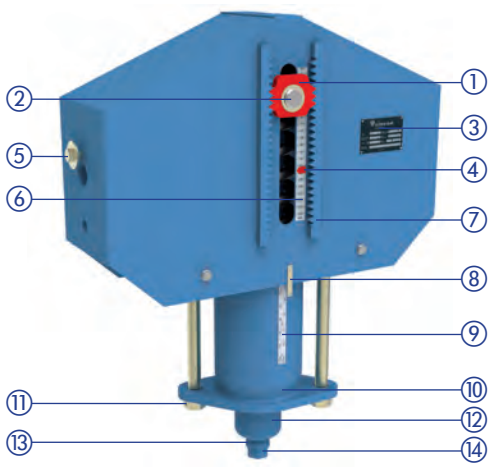

Constant hanger type 11

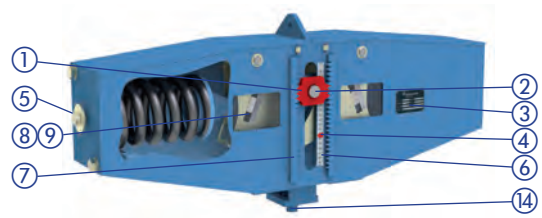

Low profile constant hanger type 18

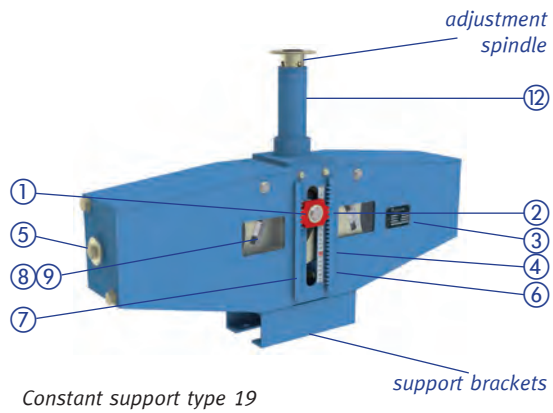

Constant support type 19

Travel scale with cold/hot marking

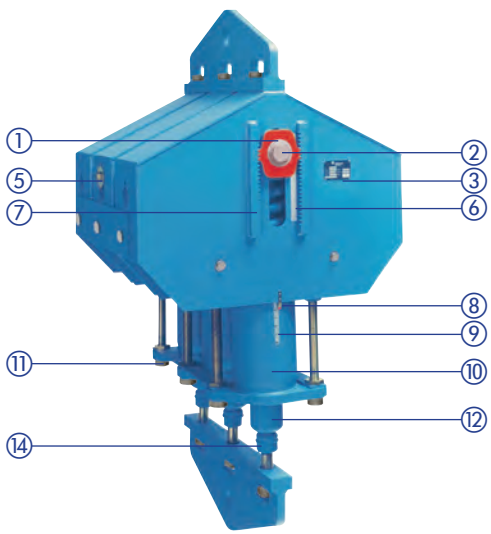

Coupled constant hanger type 12-14

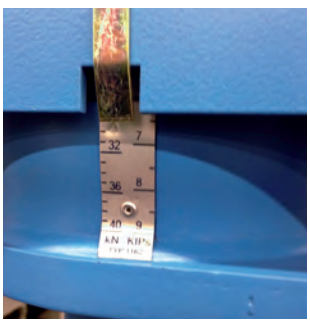

Load scale with indicator

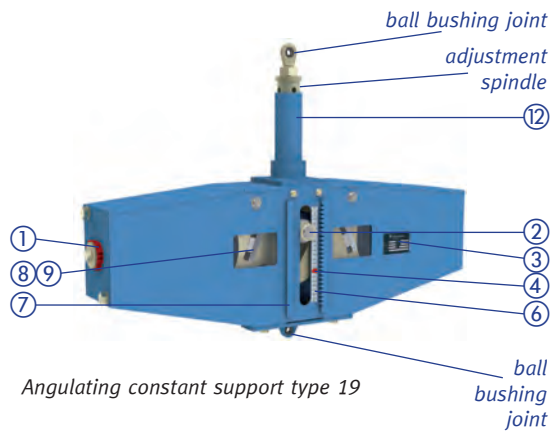

Angulating constant support type 19

Name plate with stamped operating data

Stamped on the plate are:

- **type**
- **serial number**
- **LISEGA order number**
- **calibration load (set load)**
- **inspector**
- **travel**
- **ident. number**

Connections type 11 C3 .. - 11 96 .. (single cell hangers)

The upper connection is designed as an inner thread with limited engagement depth. The lower connection is designed as a spherical adjusting nut pivotable in all directions by min. 4°. The connection threads are greased and sealed with plastic caps.

When connecting to the connecting rods, care must be taken that the lower rod is screwed into the adjusting nut **at least to the inspection hole**. A further thread engagement depth of at least 11.81 inch [300mm] is available.

Connections type 12 82 ..- 14 96 .. (heavy duty)

The upper connection is designed as a yoke plate. The lower connection is also designed as a yoke plate and fastened to the spherical adjusting nuts of the individual constant hanger cells, whereby pivoting of min. 4° is possible.

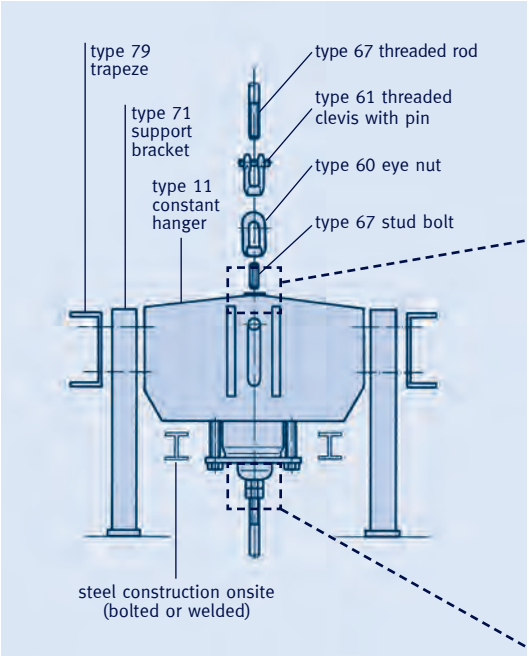

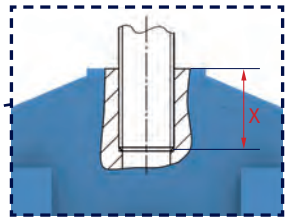

Min. thread engagement depth „X“ of upper connection (see selection table type 11, page 1.15)

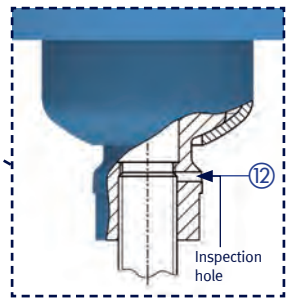

Min. thread engagement depth of connection rod in load tube

Constant hangers type 11 (seated)

These constant hangers for all load sizes can be directly seated. They can also be supplied with serial support brackets type 71 which, depending on the order specifications, can be connected and bolted via precision-fit boreholes at works or on site. The base plates of the support brackets can be welded to the contact surface. On request, support brackets with slot holes for bolting can be supplied.

Connections type 18

The upper connection is designed as a yoke plate and the lower one as a spherical adjusting nut, pivotable in all directions by min. 4°. The connection threads are greased and sealed with plastic caps.

Connections type 19

The upper connections of the constant supports are fitted either with a load plate or slide plate to reduce friction from lateral displacement, or with a ball-joint lug for angulating constant supports. The lower connections are therefore either a pedestal or a lug. During welding work at the pedestal the components inside constant supports must be protected.

Transport lock type 12 82 .. – 14 96 .. (heavy duty)

Coupled constant hangers are supplied with a transport locking device (marked in red) consisting of a retaining rod, washer and retaining nut.

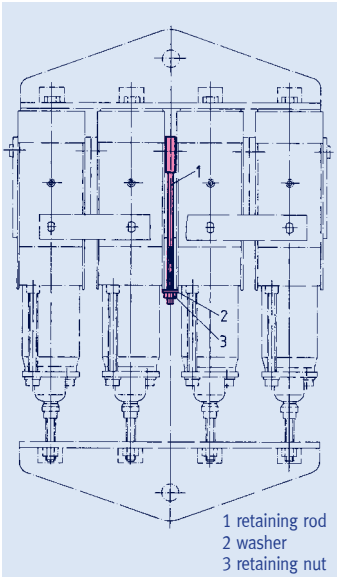

Transport lock type 12 82 .. – 14 96 ..

The transport lock is loosened only on completion of hanger installation and at the same time as the removal of the blocking devices.

For this, the retaining nut with washer marked in red are removed at the lower end with a socket wrench. Both parts are to be stored in the same place as the blocking devices. When making the force-fit connection, care must be taken that the lower threaded rods are screwed into the adjusting nuts at least up to the inspection hole. The installation dimension of the lower yoke plate can be lengthened with the lock nuts by 9.84 inch [250mm] or shortened by 2.76 inch [70mm].

3 Installation of the constant hangers

When installing, the specifications of the **installation instructions for pipe systems** must be followed. Special attention must thereby be paid to the desired installation position of the suspension rods throughout the whole support chain. There are two possibilities here:

A) The connecting rods are to be installed at an angle according to the expected horizontal displacement in the pipe system. A perpendicular position is hereby anticipated in operating condition.

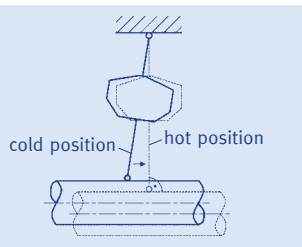

Rods vertical during plant operation

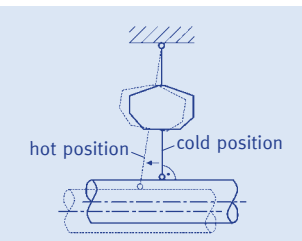

Rods vertical in installation condition

B) The connecting rods are to be installed vertically for the purpose of better inspection. A controlled angled position in operating condition is thereby permitted.

In all events, uniform specifications for the whole installation should exist.

The connecting rods and points are to be coupled force-locked.

Type 11 C3 .. – 11 96 .. (single cell hanger)

For installation of the constant hangers, transport lugs or other assembly devices can be screwed into the threaded holes on the sides. After deblocking of the hanger (see point 4) the blocking devices are to be screwed on here for safe keeping. For constant hangers with support brackets type 71 the hangers are fitted with transport lugs instead of the upper connection – these can also store the blocking devices.

Constant hangers types 12 82 .. – 14 96 ..

For installation of the hangers, the side openings of the upper yoke plate can be used for hooking on. For hangers with support brackets, the upper yoke plate is replaced by a transport lug.

4 Deblocking

Requirements

The correct deblocking of the constant hangers in accordance with the following instructions is crucial for the subsequent faultless functioning of the pipe systems.

As far as possible, the blocking devices are to be removed, immediately / shortly before commissioning.

The blocking devices must be removed as a matter of principle in a systematic way, one after the other, beginning at a fixed point or connection point.

The whole system should be inspected beforehand according to point 3 of these installation instructions.

Actual and theoretical condition

When it has been ensured that all connections are firmly force-locked, the suspended weight is completely taken up by the constant hangers or supports.

If the weight load corresponds to the set load and the piping system shows no sign of stress, then the planned equilibrium has been achieved. The blocking devices can be easily removed.

In practice however, slight stresses in the piping systems and hence resulting load shifting can hardly be avoided.

In the same way, the loads, which are usually determined theoretically, can show larger tolerances. As a result, the deviations can lead (according to under- or over-load) to corresponding jamming of the guide pin in the lower or upper section of the blocking device.

Procedure
The blocking devices can only be removed when the guide pin is centered in them. The set load is made up of the cold load and the extra weight of the hanger components suspended. If the guide pin is lying at the top or the bottom, the load adjustment must be adapted before deblocking (see point 5, load correction):

When removing the blocking devices, care must be taken that only the outer locking ring is loosened.

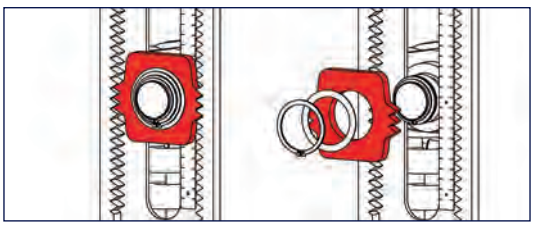

Blocked condition ① *Dismantling of the outer locking ring and blocking device*

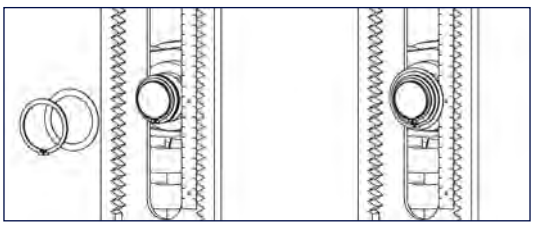

② *Assembly of the outer locking ring* ③ *Completed: deblocked condition*

In cases of requirement, e.g. for revisions, the hangers or supports can be blocked again in any position. For this, the blocking devices are placed on the guide pin and secured. The blocking devices should be firmly bolted to the side of the constant hanger body in types 11 to 14, when they are not in use.

Load distribution
Under no circumstances should the blocking devices be removed by force!

By loosening or tightening the connecting rods with a few turns of the adjusting nut in the case of constant hangers, or corresponding adjustment of the support tube for constant supports, stresses in the pipe system can be compensated for and the guide pin is then free.

The geometrical position of the pipe system must not be altered when balancing stresses!

As later adjustment at one point can cause a renewed slight shift at another, the procedure must be repeated if necessary at different points. For clear control it is recommended that, as a matter of principle, the blocking devices should only be removed when all the guide pins are centered in them.

5 Load correction type 11, 12–14

Load correction is necessary if the set load (set at the LISEGA facility) deviates from the weight actually applied. In this case, with LISEGA hangers the set load can also be adjusted in the installed condition.

It should thereby be taken into account that for load increases the remaining travel is shorter. In most cases this is not critical, due to the travel and load reserves available. For safety reasons this should be checked with the catalog data. Any changes in the installation dimension caused by load corrections must be compensated for within the load chain.

Procedure:
1) Loosen both of the load adjustment locknuts.

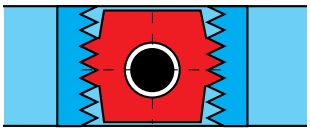

a) Guide pin is free:
Set load of the constant hangers agrees with the weight applied. Blocking device can be removed.

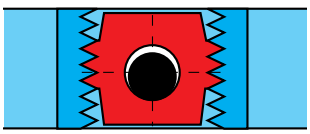

b) Guide pin lies at bottom:
Set load of constant hanger is smaller than weight applied. Loosen connecting rod or increase set load.

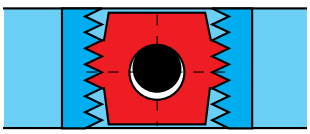

c) Guide pin lies on top:
Set load of constant hanger is larger than weight applied. Tighten connecting rod or decrease set load.

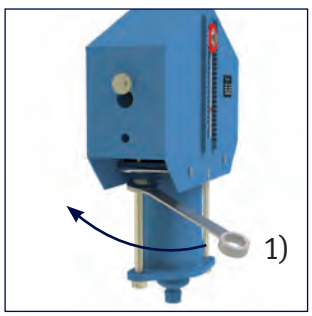

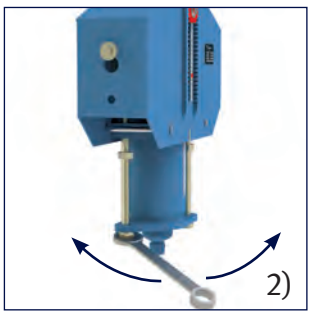

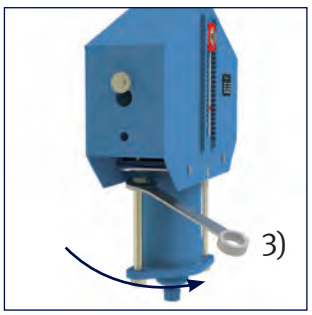

2) Alternate tightening or loosening the two load adjustment bolts, by a ¼ turn in each case. The base plate of the load adjustment hood and the lower edge of the constant hanger body must thereby remain parallel.

   The procedure is completed as soon as the guide pin no longer lies at the top or the bottom of the blocking device. If, for constant hangers of higher load groups, the necessary adjustment forces are too big and manual adjustment is not possible, auxiliary devices must be used (see point 6, auxiliary devices).

3) Tighten the locknuts of the load adjustment bolts. Now deblocking can continue.

Load correction types 18, 19

By way of the load adjustment bolts ⑩ the length of the lever of the leverage arm is altered on the left and right respectively.

On load adjustment the working travel remains unaltered.

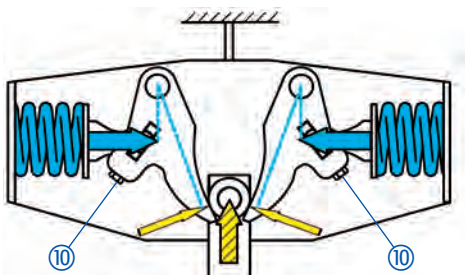

Procedure:

1) Unlock tab washer.

2) Turn load adjustment bolts equally on both sides until the guide pin is free.

3) Secure load adjustment bolts against twisting by locking the tab washers.

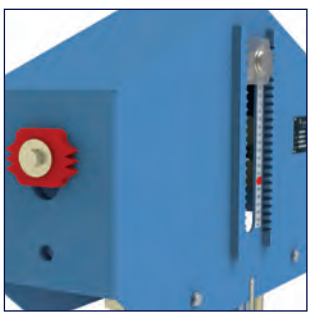

Blocking device bolted to front side

6 Auxiliary devices

Tightening or loosening of the connecting rods, as well as load calibration, can be performed manually on all hangers. For hangers in the higher load groups this work can require a great deal of effort due to the higher load calibration.

To facilitate the work, an auxiliary device can be made available with which a hydraulic load take-up using a handpump can be effected. It is operated by LISEGA personnel.

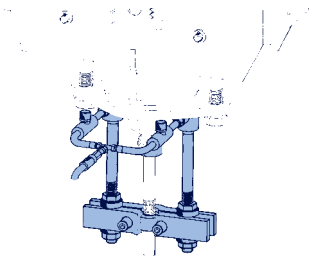

Installation device, used to relieve the load adjustment bolts

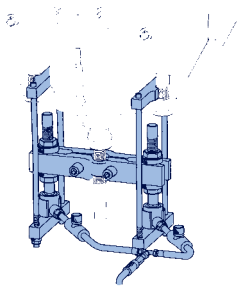

Installation device, used to relieve the adjusting nut

7 Inspection and maintenance

The flawless functioning of the constant hangers and supports can be checked in every operating situation by examining the position of the guide pin.

Under normal operating conditions, maintenance is not required.

Spring hangers, spring supports

2

SPRING HANGERS, SPRING SUPPORTS

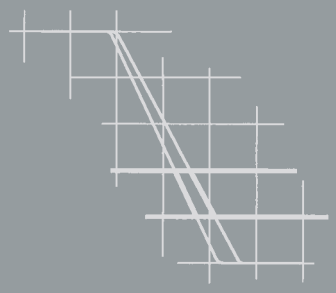

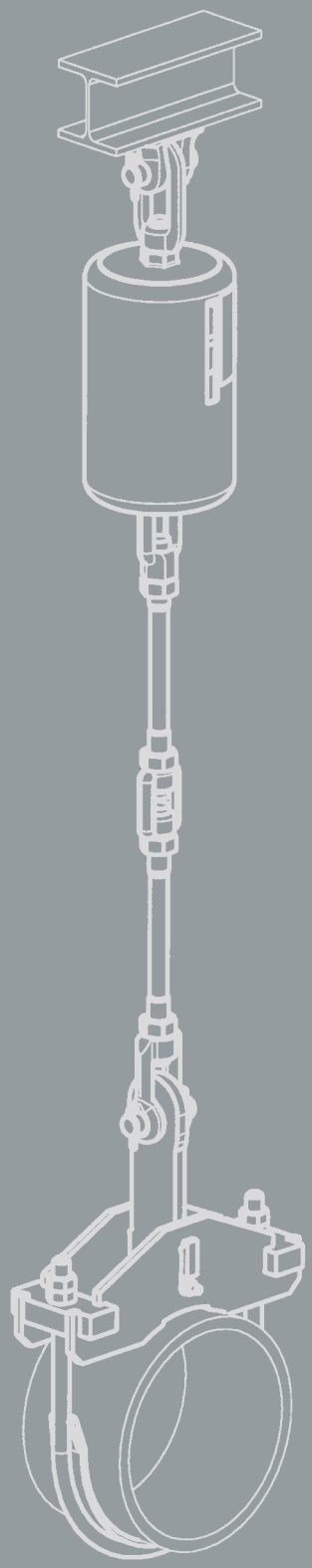

PRODUCT GROUP 2

LISEGA

17

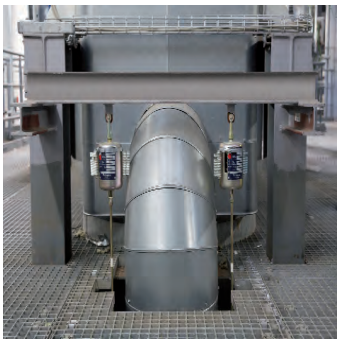

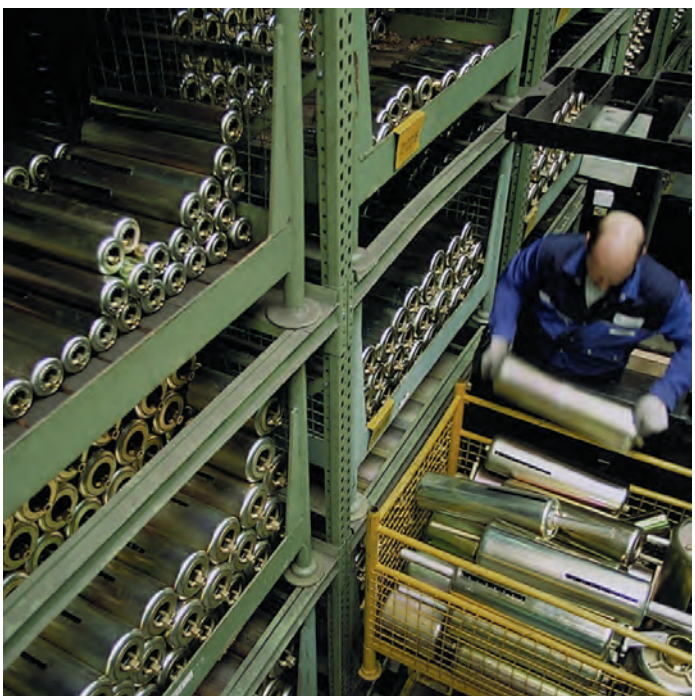

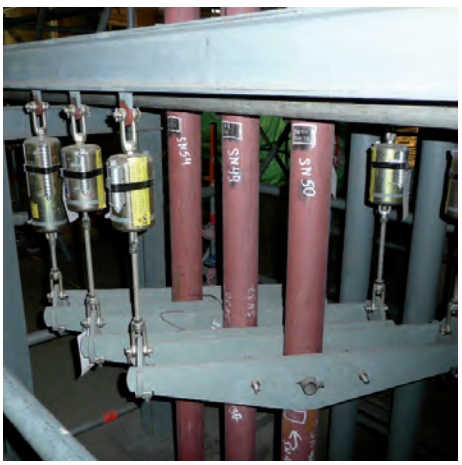
SN 54
SN 49
SN 50

Spring hangers, spring supports

Contents **Page**

Field of application 2.1

Special advantages of LISEGA spring hangers 2.2

Overview of types spring hangers and spring supports 2.3

Selection overview, spring components 2.5

Selection tables 2.7

Spring hangers type 21 . . . . . 2.7

Heavy duty spring hangers type 22 . . . . . 2.8

Spring hangers type 25 . . . . . 2.9

Heavy duty spring hangers type 26 . . . . . 2.10

Spring support type 29 . . . . . 2.11

Heavy duty spring supports type 28 . . . . . 2.12

Angulating spring supports type 20 . . . . . 2.13

Spring hanger trapezes type 79 . . . . . 2.14

Sway brace type 27 . . . . . 2.15

Telescoping spring supports type 29 . . . . . 2.17

Installation and operating instructions 2.19

Field of application

To avoid constraining the system, thermal expansion in high-temperature piping must not be restricted. The piping must therefore be supported in a correspondingly elastic manner.

Spring components

To balance slight vertical displacement in the pipe systems, spring components are used as supports. These components function on the basis of preset helical coil springs which exert a variable supporting load over the range of movement in accordance with their specifie spring characteristics. Load variations resulting from this are limited through the stress analysis calculations, depending on the sensitivity of the piping.

The relevant basis for the function of the spring components are specified in the current guidelines (see technical specifications, page 0.5).

LISEGA spring hangers and supports

A range of spring component designs are available for optimum adaptation to the **various structural requirements**. The ideal choice depends on the installation situation.

Spring hangers and supports are as a rule calibrated in such a way that the spring force and pipe load are the same in the cold position (see page 0.5). The corresponding hot load position results from the theoretical pipe displacement (travel) and the spring rate.

The difference in force between hot and cold positions acts on the pipe system as a reaction force and is governed by the relevant design specifications. Further information can be found on page 0.5.

As standard practice, the permissible force deviation between cold position (blocking position) and hot position should not exceed 25% in relation to the hot load.

Moreover, as a rule constant **hangers/supports** are used that maintain a **constant hanger/support** force over the whole displacement range.

Selection of spring hangers

The reaction force depends on the spring rate (stiffness) of the respective coil springs. The change in force from cold to hot position results from the displacement. The greater the spring rate, the greater the change in load and accordingly the reaction force in the pipe system. For optimum selection of spring hangers and supports, LISEGA has divided the load ranges into 5 travel ranges.

Details of their application can be found in the **selection table** (see pages 2.5 and 2.6), in the **installation and operating instructions** (page 2.19) and the **technical specifications** (page 0.3).

Load setting and blocking

Spring hangers and supports are checked for function and preset at the factory to the cold or blocking load and blocked in both directions of movement. This enables installation of the support in the designated installation space without time-consuming adjustments.

In addition, the supplementary loads arising through pickling, flushing or pressure testing are held by the blocking devices.

- **cold and hot positions are shown on the travel scale by white and red marking respectively**
- **the blocking devices have continuously variable settings and can be reused in any spring position**

Special advantages of LISEGA spring hangers

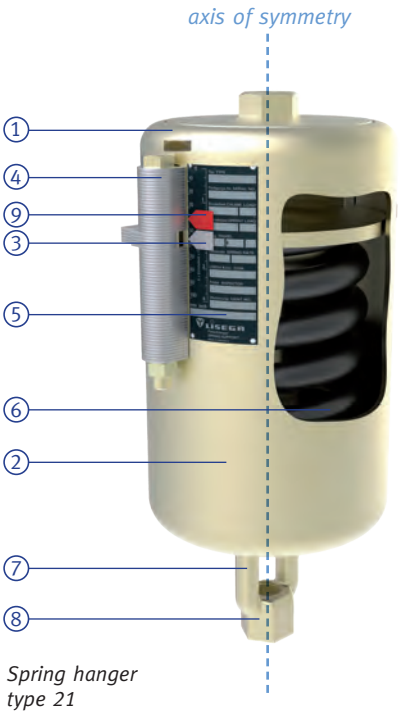

Spring hanger type 21

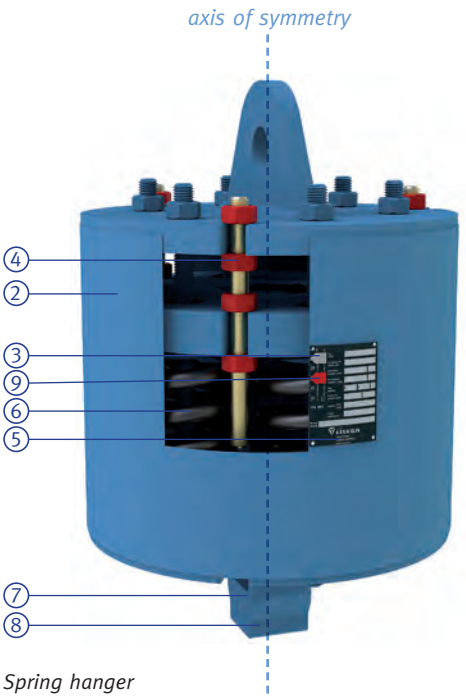

Spring hanger type 22

The user can profit from a wide range of special benefits with LISEGA spring hangers.

Significant savings are possible, particularly with regard to ancillary labor-intensive support costs such as planning, installation and operation.

① No welding (types 20, 21, 27).

② Fully electro galvanized surfaces.

For heavy duty designs: coated surfaces.

③ The cold or blocking position is marked on the travel scale (white arrow).

④ Fully adjustable blocking system.

⑤ On the spring hangers, the preset values are noted on the riveted name plate.

⑥ Special prerelaxed springs with a CED (cathodic electrophoretic dip coating) finis prevent any significant loss in load capacity.

⑦ Integrated connecting elements.

⑧ Variable connection possibilities within the load group selected and the possibility of later adjustment for load setting.

⑨ The theoretical hot position (operating position) is marked on the travel scale (red arrow).

✔ Five travel ranges from 0 to 15.75 inch [0 to 400mm], load group C to load group 9
Three travel ranges from 0 to 7.87 inch [0 to 200mm], load group 10 to load group 50.

✔ Load application free of moments by coincidering the load axis with the axis of symmetry.

✔ Favorable performance-to-weight-ratios for reduced assembly weights.

✔ Modular system simplifies selection (load groups and travel ranges).

✔ Flexible installation configurations using standardized components.

✔ Secure connection of load chains through the load and connection compatibility of system components.

Overview of types
Spring hangers and spring supports

9 – 22481 lbs

Heavy duty design 11915 – 89924 lbs

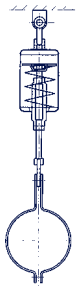

Spring hanger type 21

Spring hanger type 21

This design is the most commonly used and is fitted with an upper connection for suspension. It is used where the surrounding structure offers a suitable connection point and sufficient installation space. The upper connections can be universally adapted to the existing conditions using standard components.

Spring hanger type 22

This design corresponds functionally to type 21 and is available for higher loads up to 89924 lbs.

Spring hanger type 25

Spring hanger type 25

This version is used especially if the permissible deflection of a support chain when using type 21 was exceeded or if, due to shortage of space, a type 21 spring hanger cannot be installed. The connection is made by a rod fed through the hanger.

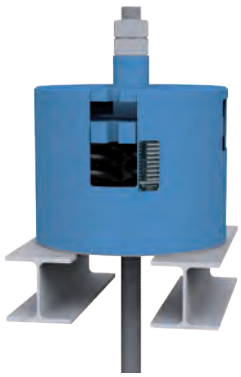

Spring hanger type 26

This design corresponds functionally to the seated spring hanger type 25 and is available for higher loads up to 89924 lbs.

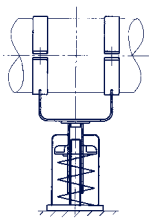

Spring support type 29

Spring support type 29

If the surrounding conditions do not permit suspensions, this design offers a suitable alternative as a support. For larger horizontal displacements of the support load and of steel/steel slide plate contact, under certain circumstances the functioning of the support can be adversely affected by any lateral forces generated. It is recommended to avoid this risk by using LISEGA slide plates. In this case the mating components must have a stainless steel surface and if necessary be fitted with a twist restraint.

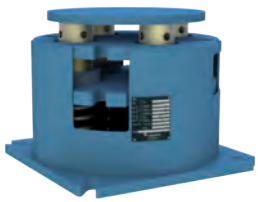

Spring support type 28

This design corresponds functionally to spring support type 29 and is available for higher loads up to 89924 lbs. Here too, LISEGA sliding components can be used as an option.

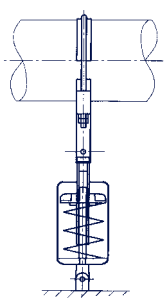

Angulating spring support type 20

Angulating spring support type 20

In contrast to the type 29 spring supports, lateral displacements can be absorbed practically free of friction forces by this design. This way, resulting forces in all planes, both in vertical as well as horizontal directions of movement, are almost completely eliminated.

The angulating spring supports act in compression. They are fitted on one side with an adjustable load tube and a rotating ball bushing joint, and on the other with a fixed ball bushing joint. The joints provide the appropriate connection to the type 35 weld-on brackets and the dynamic clamps in product group 3.

Sway braces type 27

These special components act in compression and tension directions and are used to stabilize the position of pipe systems and other plant equipment. The connection components correspond with those in product group 3 (dynamic components).

With the LISEGA sway braces type 27 the following settings can be made:

- **load pre-tensioning**
- **installation dimensions**
- **free stroke**

Spring hanger trapezes type 79

These commonly used components combine the advantages of the spring hanger with the easy-to-install, weld-free plug-in trapezes. For restricted spaces the spring hanger trapezes can be supplied as special welded designs.

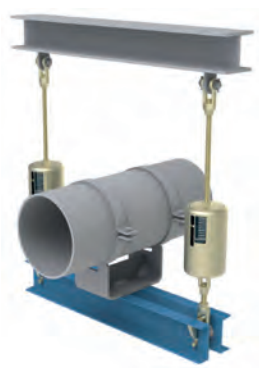

Telescopic spring supports type 29 .. 2.

As a special design of type 29 these telescoping spring supports are used for lower E dimensions. They are fitted as standard with a PTFE slide plate.

Add-on components

Slide plate for spring supports type 29/28
To reduce friction between the load plate and mating component (e.g. clamp base), PTFE sliding materials (up to 356°F [180°C]) or suitable material for higher temperatures (up to 660°F [350°C]) are used. The mating component should in this case have a stainless steel sliding surface. The selection of slide plates can be found on page 2.11.

Installation extension for spring support type 29
To bridge larger installation heights, installation extensions can be ordered (see page 2.11).

Base plate for spring hanger type 25
If required, type 25 can be supplied with the base plate type 72 for bolting or welding. A selection can be found on page 2.9.

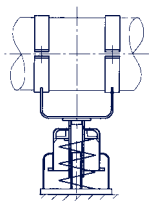

Spring support type 29 .. 2. (telescopic)

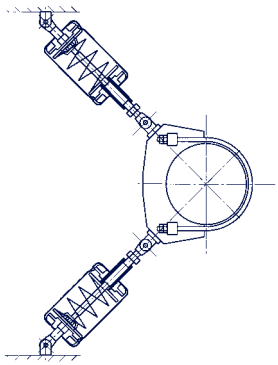

Sway brace type 27 angled arrangement

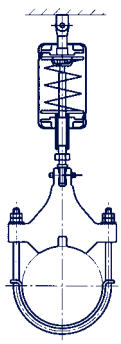

Sway brace type 27 simple arrangement

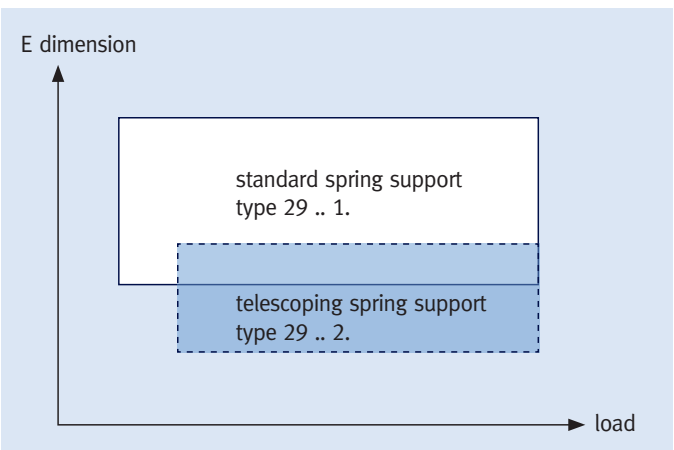

Extended field of application with telescopic spring support 29 .. 2.

Selection overview, spring components

Selection criteria for spring hangers and supports

Permissible force variation
The permissible force variation from cold load (installation load) to hot load (operating load) is limited internationally by the common specifications for pipe system calculations to **max 25% of the operating load**. In principle however, it is dependent on the pipe systems allowable stresses.

Maximum travel
To avoid functional variations through instability from springs with long travel, **maximum travel of 1.97 inch [50mm]** should not, as a rule, be exceeded.

Spring rates
In order to offer the largest possible field of application while at the same time complying with these specifications LISEGA spring components are divided into 5 travel ranges with correspondingly different spring rates.

Extra-long springs
Travel ranges 4 and 5 belong to the 'extra-long spring travel' category and should only be used after careful consideration of the travel and variability, especially in sensitive, 'soft' pipe systems.

Design type
The choice of a suitable design type is dependent on the respective support configuration and/or installation conditions.

Economical size
The following selection procedures can be followed to determine the most economical component size:

Spring hangers type 21, spring hangers type 25 for seating, spring supports type 29, angulating spring supports type 20

travel range ①					type designation										
					21 C2 29	21 D. 29	21 1. 28	21 2. 28	21 3. 28	21 4. 28	21 5. 28	21 6. 28	21 7. 28	21 8. 28	21 9. 28
						25 D. 19	25 1. 18	25 2. 18	25 3. 18	25 4. 18	25 5. 18	25 6. 18	25 7. 18	25 8. 18	25 9. 18
					29 C2 19	29 D. 19	29 1. 18	29 2. 18	29 3. 18	29 4. 18	29 5. 18	29 6. 18	29 7. 18	29 8. 18	29 9. 18
...1..	...2..	...3..	...4.. ②	...5..		20 D. 19	20 1. 14	20 2. 14	20 3. 14	20 4. 14	20 5. 14	20 6. 14	20 7. 14	20 8. 14	20 9. 14
working travel [inch] ③					load [lbs]										
0	0	0	0	0	9	27	92	187	373	749	1497	2997	4496	5993	7493
0.10	0.20	0.39	0.59	0.79	11	31	101	205	411	823	1648	3296	4946	6594	8241
0.20	0.39	0.79	1.18	1.57	13	36	112	225	450	899	1798	3597	5395	7194	8992
0.30	0.59	1.18	1.77	2.36	16	40	121	243	486	973	1947	3896	5845	7792	9741
0.39	0.79	1.57	2.36	3.15	18	45	130	261	524	1048	2097	4195	6295	8392	10490
0.49	0.98	1.97	2.95	3.94	20	49	139	281	562	1124	2248	4496	6744	8992	11240
0.59	1.18	2.36	3.54	4.72	22	54	148	299	598	1198	2396	4795	7194	9590	11989
0.69	1.38	2.76	4.13	5.51	25	58	157	317	636	1272	2547	5094	7644	10191	12738
0.79	1.57	3.15	4.72	6.30	27	63	169	337	674	1349	2698	5395	8093	10791	13489
0.89	1.77	3.54	5.31	7.09	29	67	178	355	710	1423	2846	5694	8543	11389	14237
0.98	1.97	3.94	5.91	7.87	31	72	187	373	749	1497	2997	5993	8992	11989	14986
1.08	2.17	4.33	6.50	8.66	36	76	196	393	787	1574	3147	6295	9442	12589	15737
1.18	2.36	4.72	7.09	9.45	38	81	205	411	823	1648	3296	6594	9892	13187	16485
1.28	2.56	5.12	7.68	10.24	40	85	214	429	861	1722	3446	6893	10341	13788	17234
1.38	2.76	5.51	8.27	11.02	43	90	225	450	899	1798	3597	7194	10791	14388	17985
1.48	2.95	5.91	8.86	11.81	45	94	234	468	935	1873	3745	7493	11240	14986	18733
1.57	3.15	6.30	9.45	12.60	47	99	243	486	973	1947	3896	7792	11690	15586	19482
1.67	3.35	6.69	10.04	13.39	49	103	252	506	1012	2023	4047	8093	12140	16186	20233
1.77	3.54	7.09	10.63	14.17	52	108	261	524	1048	2097	4195	8392	12589	16784	20981
1.87	3.74	7.48	11.22	14.96	54	112	270	542	1086	2172	4346	8691	13039	17384	21730
1.97	3.94	7.87	11.81	15.75	56	117	281	562	1124	2248	4496	8992	13489	17985	22481
					spring rate c [lbs/inch]										
											190	380	571	761	951
									63.4	127	254	508	761	1015	1269
						12.0	23.4	47.4	94.8	190	380	761	1142	1522	1903
					12.0	23.4	47.4	94.8	190	380	761	1522	2284	3045	3806
						47.4	94.8	190	380	761	1522	3045	4568	6090	7613

In cases where a smaller 'E' dimension than that of type 29 ..1. is required, we recommend the use of telescopic spring support type 29 .. 2. (see page 2.17).

Determination of the most favorable size

1. Selection of the most favorable spring hanger/support

Example:

Operating load	F = 1349 lbs
Permissible deviation	p < 25%
Travel (upwards)	s = 0.60 inch

The max. permissible spring rate produces:

$$\text{Spring rate} \leq \frac{(\text{permissible deviation}) \cdot (\text{operating load})}{(\text{working travel})}$$

$$c \leq \frac{0.25 \cdot 1349\,\text{lbs}}{0.6\,\text{inch}} = 562.1\,\text{lbs/inch}$$

Selection type	25 42 18
Spring rate	c = 380 lbs/inch
Cold load	F_K = 1574 lbs

2. Determination force variation (percentage)

Example:

1349 lbs operating load, working travel 0.6 inch (upwards), a spring hanger type 25 42 18 with a spring rate of c = 380 lbs/inch was selected:

$$\text{Change in force} = \frac{(\text{working travel}) \cdot (\text{spring rate})}{(\text{operating load})}$$

$$\Delta F = \frac{0.6\,\text{inch} \cdot 380\,\text{lbs/inch}}{1349\,\text{lbs}} = 0.169$$

$$\Delta F\,[\%] = 16.9\%$$

Spring hangers type 22, spring hangers type 26 for seating, spring supports type 28

travel range ①			type designation				
			22 1. 29	22 2. 29	22 3. 29	22 4. 29	22 5. 29
			26 1. 19	26 2. 19	26 3. 19	26 4. 19	26 5. 19
...1..	...2..	...3..	28 1. 19	28 2. 19	28 3. 19	28 4. 19	28 5. 19
working travel [inch] ③			load [lbs]				
0	0	0	11989	14986	17985	22481	29974
0.10	0.20	0.39	13187	16485	19783	24729	32970
0.20	0.39	0.79	14388	17985	21582	26977	35969
0.30	0.59	1.18	15586	19482	23380	29225	38966
0.39	0.79	1.57	16784	20981	25179	31473	41963
0.49	0.98	1.97	17985	22481	26977	33721	44962
0.59	1.18	2.36	19183	23978	28776	35969	47958
0.69	1.38	2.76	20381	25478	30574	38218	50955
0.79	1.57	3.15	21582	26977	32372	40466	53954
0.89	1.77	3.54	22780	28474	34171	42714	56951
0.98	1.97	3.94	23978	29974	35969	44962	59948
1.08	2.17	4.33	25179	31473	37768	47210	62946
1.18	2.36	4.72	26377	32970	39566	49458	65943
1.28	2.56	5.12	27575	34470	41365	51706	68940
1.38	2.76	5.51	28776	35969	43163	53954	71939
1.48	2.95	5.91	29974	37467	44962	56202	74936
1.57	3.15	6.30	31172	38966	46760	58450	77932
1.67	3.35	6.69	32372	40466	48559	60698	80931
1.77	3.54	7.09	33571	41963	50357	62946	83928
1.87	3.74	7.48	34769	43462	52156	65195	86925
1.97	3.94	7.87	35969	44962	53954	67443	89924
			spring rate c [lbs/inch]				
			3045	3806	4568	5710	7613
			6090	7613	9136	11420	15227
			12181	15227	18272	22841	30454

① Travel range = 4th digit of type designation.
For the availability of the different travel ranges, see dimension tables on pages 2.7 to 2.17.

② The use of springs with extra-long travel is to be treated with reservation due to the relatively large spring hysteresis.

③ The actual travel is subject to tolerances and may differ to theoretical values.

Spring hangers
Type 21

Spring hanger
type 21 C2 29 to 21 95 28
Standard design,
delivery from stock.

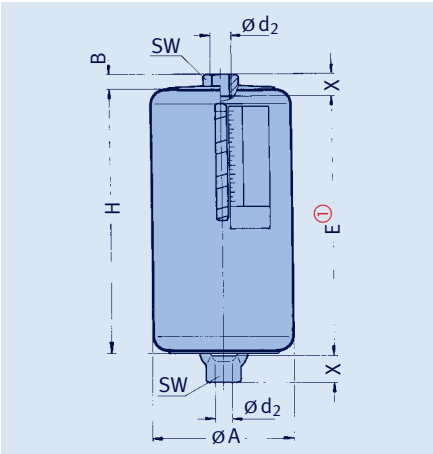

① Dimension 'E' increases on loading by the corresponding spring travel (see load table on page 2.5).

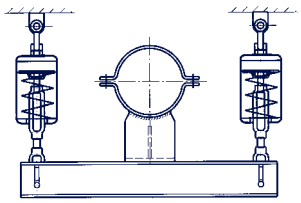

In restricted spaces the spring hangers can be used with type 79 trapezes (see page 2.14).

type	ø A	B	ø d_2	E ①	H	SW	X	weight [lbs]
21 C2 29	3.15	0.43	3/8 UNC	8.07	8.07	0.75	0.59	4.2
21 D2 29	3.54	0.43	3/8 UNC	9.84	9.65	0.75	0.59	6.6
21 D3 29	3.54	0.43	3/8 UNC	18.70	18.50	0.75	0.59	11.0
21 11 28	3.54	0.43	1/2 UNC	6.10	5.71	0.75	0.59	4.6
21 12 28	3.54	0.43	1/2 UNC	9.84	9.65	0.75	0.59	6.8
21 13 28	3.54	0.43	1/2 UNC	18.70	18.50	0.75	0.59	12.2
21 21 28	4.53	0.47	1/2 UNC	6.10	5.91	0.75	0.59	8.4
21 22 28	4.53	0.47	1/2 UNC	10.04	9.84	0.75	0.59	11.6
21 23 28	4.53	0.47	1/2 UNC	18.70	18.11	0.75	0.59	19.0
21 31 28	4.53	0.51	5/8 UNC	6.30	6.10	0.94	0.79	9.4
21 32 28	4.53	0.51	5/8 UNC	10.04	9.84	0.94	0.79	13.2
21 33 28	4.53	0.51	5/8 UNC	18.70	18.50	0.94	0.79	21.4
21 34 28	4.53	0.51	5/8 UNC	33.07	28.54	0.94	0.79	30.8
21 41 28	6.10	0.67	3/4 UNC	7.28	7.09	1.18	0.98	20.2
21 42 28	6.10	0.67	3/4 UNC	11.42	11.42	1.18	0.98	28.2
21 43 28	6.10	0.67	3/4 UNC	20.67	20.67	1.18	0.98	44.0
21 44 28	6.10	0.67	3/4 UNC	36.22	31.50	1.18	0.98	64.0
21 51 28	7.09	0.83	1 UNC	8.46	8.46	1.42	1.18	36.4
21 52 28	7.09	0.83	1 UNC	12.01	12.01	1.42	1.18	45.2
21 53 28	7.09	0.83	1 UNC	21.26	21.26	1.42	1.18	70.6
21 54 28	7.09	0.83	1 UNC	40.75	32.48	1.42	1.18	101.0
21 55 28	7.09	0.83	1 UNC	50.20	41.93	1.42	1.18	125.0
21 61 28	8.66	0.94	1 1/4 UNC	9.65	9.65	1.81	1.38	68.4
21 62 28	8.66	0.94	1 1/4 UNC	14.17	14.17	1.81	1.38	88.2
21 63 28	8.66	0.94	1 1/4 UNC	25.20	25.20	1.81	1.38	137.0
21 64 28	8.66	0.94	1 1/4 UNC	47.44	38.58	1.81	1.38	198.0
21 65 28	8.66	0.94	1 1/4 UNC	58.66	49.80	1.81	1.38	251.0
21 71 28	9.65	1.18	1 1/2 UNC	11.02	11.22	2.17	1.77	106.0
21 72 28	9.65	1.18	1 1/2 UNC	15.94	16.14	2.17	1.77	139.0
21 73 28	9.65	1.18	1 1/2 UNC	26.57	26.77	2.17	1.77	196.0
21 74 28	9.65	1.18	1 1/2 UNC	51.18	42.13	2.17	1.77	293.0
21 75 28	9.65	1.18	1 1/2 UNC	62.01	52.95	2.17	1.77	353.0
21 81 28	9.65	1.18	1 3/4 UNC	12.01	12.60	2.56	1.97	128.0
21 82 28	9.65	1.18	1 3/4 UNC	18.50	19.09	2.56	1.97	176.0
21 83 28	9.65	1.18	1 3/4 UNC	33.27	33.86	2.56	1.97	278.0
21 84 28	9.65	1.18	1 3/4 UNC	56.30	52.36	2.56	1.97	400.0
21 85 28	9.65	1.18	1 3/4 UNC	71.26	67.32	2.56	1.97	500.0
21 91 28	10.83	1.42	2 UNC	12.99	13.98	2.95	2.36	185.0
21 92 28	10.83	1.42	2 UNC	19.88	20.87	2.95	2.36	245.0
21 93 28	10.83	1.42	2 UNC	34.25	35.24	2.95	2.36	360.0
21 94 28	10.83	1.42	2 UNC	59.65	54.92	2.95	2.36	535.0
21 95 28	10.83	1.42	2 UNC	74.21	69.49	2.95	2.36	650.0

Order details:
spring hanger type 21 .. ..
marking: ...
set load: ...lbs
travel: ...inch up/down

Heavy duty spring hangers
Type 22

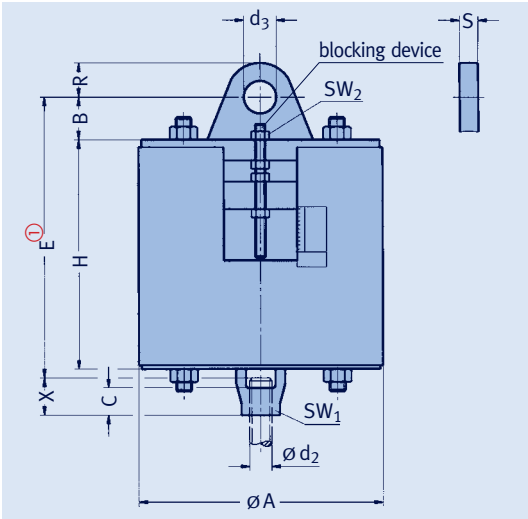

Spring hangers
type 22 11 29 to 22 53 29

type	øA	B	C	ød2	ød3	E ①	H	R	S	SW1	SW2	X	weight [lbs]
22 11 29	20.67	3.15	2.36	2 1/4 UNC	2.44	17.32	13.78	3.54	1.18	3.35	1.81	2.56	530
22 12 29	20.67	3.15	2.36	2 1/4 UNC	2.44	22.05	18.50	3.54	1.18	3.35	1.81	2.56	600
22 13 29	20.67	3.15	2.36	2 1/4 UNC	2.44	33.07	29.53	3.54	1.18	3.35	1.81	2.56	750
22 21 29	21.46	3.74	2.76	2 1/2 UNC	2.83	18.70	14.57	4.13	1.18	3.74	1.81	2.95	630
22 22 29	21.46	3.74	2.76	2 1/2 UNC	2.83	23.43	19.29	4.13	1.18	3.74	1.81	2.95	710
22 23 29	21.46	3.74	2.76	2 1/2 UNC	2.83	34.45	30.31	4.13	1.18	3.74	1.81	2.95	900
22 31 29	23.23	3.74	2.95	2 3/4 UNC	2.83	19.29	15.16	4.13	1.18	3.94	1.81	3.15	790
22 32 29	23.23	3.74	2.95	2 3/4 UNC	2.83	24.02	19.88	4.13	1.18	3.94	1.81	3.15	890
22 33 29	23.23	3.74	2.95	2 3/4 UNC	2.83	35.04	30.91	4.13	1.18	3.94	1.81	3.15	1120
22 41 29	24.61	4.53	3.15	3 UNC	3.23	21.85	16.93	4.72	1.38	4.13	2.17	3.35	1000
22 42 29	24.61	4.53	3.15	3 UNC	3.23	26.97	22.05	4.72	1.38	4.13	2.17	3.35	1140
22 43 29	24.61	4.53	3.15	3 UNC	3.23	37.60	32.68	4.72	1.38	4.13	2.17	3.35	1380
22 51 29	25.39	5.51	3.54	3 1/4 UNC	3.62	24.80	18.90	5.31	1.38	4.53	2.56	3.74	1210
22 52 29	25.39	5.51	3.54	3 1/4 UNC	3.62	31.50	25.59	5.31	1.38	4.53	2.56	3.74	1440
22 53 29	25.39	5.51	3.54	3 1/4 UNC	3.62	46.26	40.35	5.31	1.38	4.53	2.56	3.74	1910

① Dimension 'E' increases on loading by the corresponding spring travel (see load table on page 2.6).

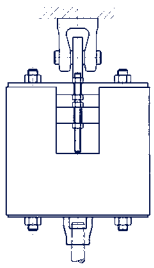

Spring hanger type 22 with weld-on clevis type 73 mounted

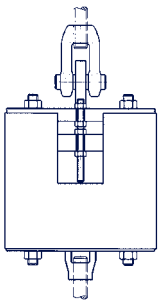

Spring hanger type 22 with threaded clevis type 61 mounted

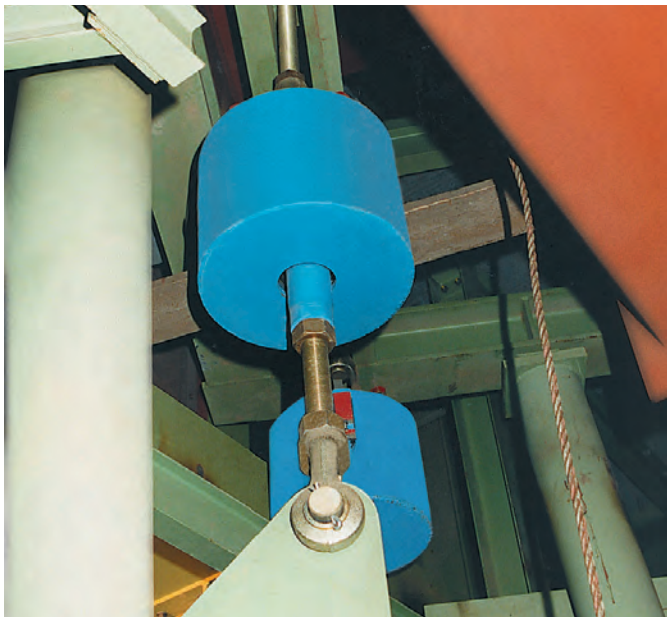

◀ Typical installation situations

Order details:
spring hanger type 22 .. ..
marking: ...
set load: ...lbs
travel: ...inch up/down

Spring hangers Type 25

Spring hangers for seating type 25 D2 19 to 25 93 18
Standard design,
delivery from stock.

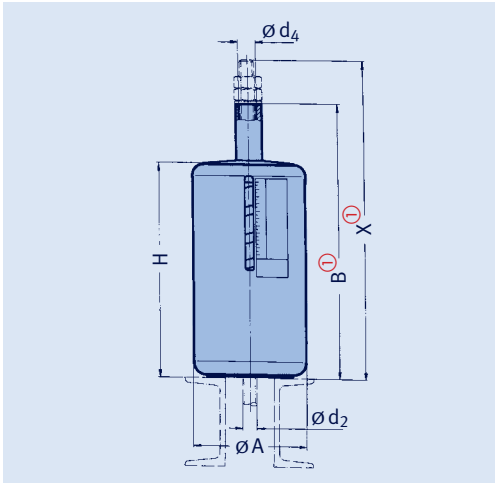

It is recommended to use the type 25 with the base plate type 72.

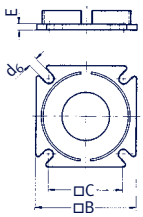

type	B	C	d_6	E	[lbs]
72 D9 28	4.92	3.74	0.47	0.31	2.2
72 19 28	4.92	3.74	0.47	0.31	2.2
72 29 28	5.91	4.53	0.55	0.39	3.5
72 39 28	5.91	4.53	0.55	0.47	4.0
72 49 28	7.48	5.51	0.71	0.47	6.6
72 59 28	8.66	6.69	0.71	0.47	8.8
72 69 28	10.24	7.87	0.91	0.59	15.2
72 79 28	11.42	8.46	0.91	0.79	24.0
72 89 28	11.42	8.46	1.06	0.79	24.0
72 99 28	13.39	10.04	1.30	0.98	40.1

load group

type	ø A	B ①	ø d_2	ø d_4	H	X_{max} ①	weight [lbs]
25 D2 19	3.54	13.78	3/8 UNC	0.51	9.65	14.96	6.2
25 D3 19	3.54	26.57	3/8 UNC	0.51	18.50	27.76	10.8
25 11 18	3.54	7.87	1/2 UNC	0.51	5.71	9.06	4.6
25 12 18	3.54	13.78	1/2 UNC	0.51	9.65	14.96	6.8
25 13 18	3.54	26.57	1/2 UNC	0.51	18.50	27.76	12.2
25 21 18	4.53	8.07	1/2 UNC	0.51	5.91	9.25	7.8
25 22 18	4.53	13.98	1/2 UNC	0.51	9.84	15.16	11.2
25 23 18	4.53	26.18	1/2 UNC	0.51	18.11	27.36	18.6
25 31 18	4.53	8.27	5/8 UNC	0.71	6.10	9.84	8.2
25 32 18	4.53	13.98	5/8 UNC	0.71	9.84	15.55	11.6
25 33 18	4.53	26.57	5/8 UNC	0.71	18.50	28.15	19.6
25 41 18	6.10	9.06	3/4 UNC	0.98	7.09	11.02	17.6
25 42 18	6.10	15.55	3/4 UNC	0.98	11.42	17.52	25.4
25 43 18	6.10	28.74	3/4 UNC	0.98	20.67	30.71	41.0
25 51 18	7.09	10.43	1 UNC	1.10	8.46	12.80	32.0
25 52 18	7.09	15.94	1 UNC	1.10	12.01	18.31	40.0
25 53 18	7.09	29.13	1 UNC	1.10	21.26	31.50	64.0
25 61 18	8.66	11.81	1 1/4 UNC	1.34	9.65	14.76	58.0
25 62 18	8.66	18.31	1 1/4 UNC	1.34	14.17	21.26	78.0
25 63 18	8.66	33.27	1 1/4 UNC	1.34	25.20	36.22	124.0
25 71 18	9.65	13.78	1 1/2 UNC	1.57	11.81	17.32	88.0
25 72 18	9.65	20.87	1 1/2 UNC	1.57	16.93	24.41	116.0
25 73 18	9.65	35.43	1 1/2 UNC	1.57	27.56	38.98	174.0
25 81 18	9.65	15.16	1 3/4 UNC	1.85	13.19	19.49	98.0
25 82 18	9.65	23.82	1 3/4 UNC	1.85	19.69	28.15	146.0
25 83 18	9.65	42.32	1 3/4 UNC	1.85	34.45	46.65	244.0
25 91 18	10.83	16.34	2 UNC	2.13	14.57	21.06	148.0
25 92 18	10.83	25.39	2 UNC	2.13	21.46	30.12	202.0
25 93 18	10.83	43.70	2 UNC	2.13	35.83	48.43	316.0

① Dimensions B and X are reduced on loading by the corresponding spring travel (see load table on page 2.5).

For special applications, e.g. in extremely restricted spaces, spring hangers type 25 can be supplied as a trapeze unit.

Order details:
spring hanger type 25 .. ..
marking: ...
set load: ...lbs
travel: ...inch up/down

Heavy duty spring hangers
Type 26

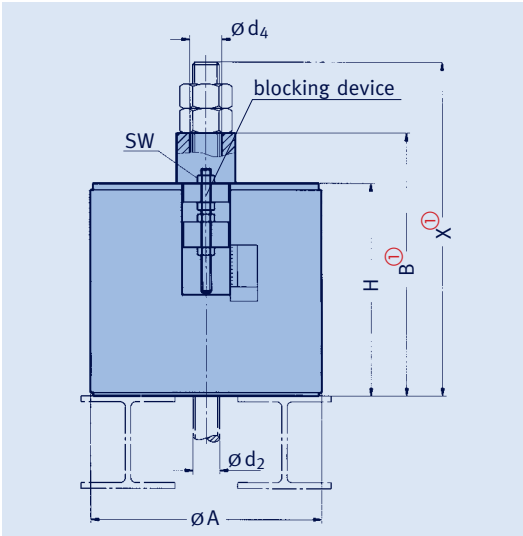

Spring hangers for seating type 26 11 19 to 26 53 19

type	ø A	B ①	ø d_2	ø d_4	H	SW	X_{max} ①	weight [lbs]
26 11 19	20.08	15.55	2 1/4 UNC	2.36	13.58	1.81	20.87	450
26 12 19	20.08	22.24	2 1/4 UNC	2.36	18.31	1.81	27.56	520
26 13 19	20.08	37.20	2 1/4 UNC	2.36	29.33	1.81	42.52	680
26 21 19	22.05	15.94	2 1/2 UNC	2.76	13.98	1.81	22.05	580
26 22 19	22.05	22.64	2 1/2 UNC	2.76	18.70	1.81	28.74	660
26 23 19	22.05	37.60	2 1/2 UNC	2.76	29.72	1.81	43.70	860
26 31 19	24.02	16.54	2 3/4 UNC	2.76	14.57	1.81	23.03	760
26 32 19	24.02	23.23	2 3/4 UNC	2.76	19.29	1.81	29.72	860
26 33 19	24.02	38.19	2 3/4 UNC	2.76	30.31	1.81	44.69	1080
26 41 19	24.02	18.50	3 UNC	3.15	16.54	2.17	25.39	870
26 42 19	24.02	25.59	3 UNC	3.15	21.65	2.17	32.48	990
26 43 19	24.02	40.35	3 UNC	3.15	32.48	2.17	47.24	1220
26 51 19	24.02	20.87	3 1/4 UNC	3.54	18.90	2.56	28.54	1030
26 52 19	24.02	29.53	3 1/4 UNC	3.54	25.59	2.56	37.20	1200
26 53 19	24.02	48.03	3 1/4 UNC	3.54	40.16	2.56	55.71	1600

① Dimensions B and X are reduced on loading by the corresponding spring travel (see load table on page 2.6).

Spring assemblies as special design for use on a power station boiler.

Order details:
spring hanger type 26
marking: ...
set load: ...lbs
travel: ...inch up/down

Spring supports Type 29

Spring supports
type 29 C2 19 to 29 93 18
Standard design,
delivery from stock.

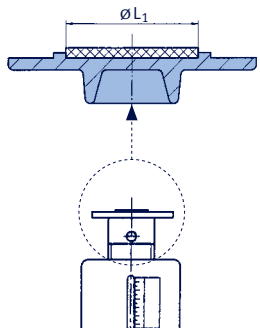

Load plate with integrated slide plate.

When using slide plates the sliding surfaces of the mating components should be fitted with stainless steel plating. This is indicated by the suffix 'SP' in the type designation (e.g., clamp base type 49 22 25-SP).

type 29* with slide plate		
up to 356°F	up to 660°F	ø L_1
29 C2 17	29 C2 16	1.57
29 D. 17	29 D. 16	1.57
29 1. 17	29 1. 16	1.57
29 2. 17	29 2. 16	1.57
29 3. 17	29 3. 16	1.57
29 4. 17	29 4. 16	2.56
29 5. 17	29 5. 16	2.56
29 6. 17	29 6. 16	4.33
29 7. 17	29 7. 16	4.33
29 8. 17	29 8. 16	5.91
29 9. 17	29 9. 16	5.91

* friction values of the sliding components, see table on page 7.11.

For large horizontal displacements, beside the use of slide plates the use of clamp bases with twist restraints is also recommended.

Order details:
spring support type 29 .. ..
marking: ...
set load: ...lbs
travel: ...inch up/down

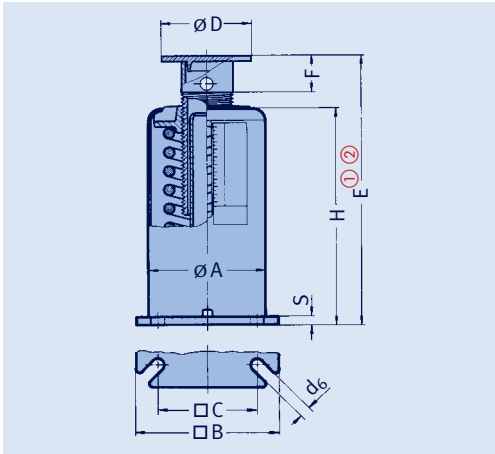

type ②	øA	□B	□C	d_6	E①②	F	H	øD	S	weight [lbs]
29 C2 19	3.15	4.13	2.95	0.39	10.63	1.42	8.27	3.15	0.24	5.8
29 D1 19	3.54	4.92	3.74	0.47	7.68	1.42	5.71	3.15	0.31	7.0
29 D2 19	3.54	4.92	3.74	0.47	12.01	1.42	9.65	3.15	0.31	9.4
29 D3 19	3.54	4.92	3.74	0.47	21.65	1.42	18.50	3.15	0.31	14.6
29 11 18	3.54	4.92	3.74	0.47	7.68	1.42	5.71	3.15	0.31	7.4
29 12 18	3.54	4.92	3.74	0.47	12.01	1.42	9.65	3.15	0.31	10.2
29 13 18	3.54	4.92	3.74	0.47	21.65	1.42	18.50	3.15	0.31	15.8
29 21 18	4.53	5.91	4.53	0.55	7.87	1.42	5.91	3.94	0.39	12.4
29 22 18	4.53	5.91	4.53	0.55	12.20	1.42	9.84	3.94	0.39	16.8
29 23 18	4.53	5.91	4.53	0.55	21.26	1.42	18.11	3.94	0.39	24.4
29 31 18	4.53	5.91	4.53	0.55	8.07	1.42	6.10	3.94	0.47	13.8
29 32 18	4.53	5.91	4.53	0.55	12.20	1.42	9.84	3.94	0.47	18.6
29 33 18	4.53	5.91	4.53	0.55	21.65	1.42	18.50	3.94	0.47	28.6
29 41 18	6.10	7.48	5.51	0.71	9.45	1.89	7.09	4.72	0.47	26.6
29 42 18	6.10	7.48	5.51	0.71	14.17	1.89	11.42	4.72	0.47	35.2
29 43 18	6.10	7.48	5.51	0.71	24.21	1.89	20.67	4.72	0.47	55.2
29 51 18	7.09	8.66	6.69	0.71	10.63	1.97	8.27	5.91	0.47	44.0
29 52 18	7.09	8.66	6.69	0.71	14.57	1.97	11.81	5.91	0.47	54.0
29 53 18	7.09	8.66	6.69	0.71	24.61	1.97	21.06	5.91	0.47	82.0
29 61 18	8.66	10.24	7.87	0.91	12.01	1.97	9.65	6.69	0.59	74.0
29 62 18	8.66	10.24	7.87	0.91	16.93	1.97	14.17	6.69	0.59	98.0
29 63 18	8.66	10.24	7.87	0.91	28.74	1.97	25.20	6.69	0.59	150.0
29 71 18	9.65	11.42	8.46	0.91	14.17	2.05	11.81	7.87	0.79	116.0
29 72 18	9.65	11.42	8.46	0.91	19.69	2.05	16.73	7.87	0.79	150.0
29 73 18	9.65	11.42	8.46	0.91	31.10	2.05	27.36	7.87	0.79	214.0
29 81 18	9.65	11.42	8.46	1.06	15.75	2.17	13.19	7.87	0.79	132.0
29 82 18	9.65	11.42	8.46	1.06	22.64	2.17	19.69	7.87	0.79	186.0
29 83 18	9.65	11.42	8.46	1.06	37.99	2.17	34.25	7.87	0.79	294.0
29 91 18	10.83	13.39	10.04	1.30	17.32	2.36	14.57	9.45	0.98	200.0
29 92 18	10.83	13.39	10.04	1.30	24.61	2.36	21.46	9.45	0.98	260.0
29 93 18	10.83	13.39	10.04	1.30	39.76	2.36	35.83	9.45	0.98	382.0

① Dimension 'E' is independent of the load adjustment; it changes on loading by the respective spring travel (see load table on page 2.5). Adjustment possibility + 1.18inch.

② Type 29 .. 1. is supplied as standard with a electro galvanized load plate without a slide plate. If slide plates are used, the 'E' dimension increases by 0.1inch [2.5mm]. Please note the recommendation from the table on page 7.12.

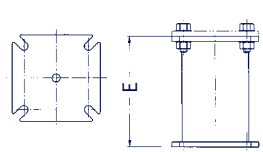

type 29 .9 15-E...
→ E = ...inch
→ load group

To bridge greater installation heights, adapted installation extensions can be ordered.

Heavy duty spring supports
Type 28

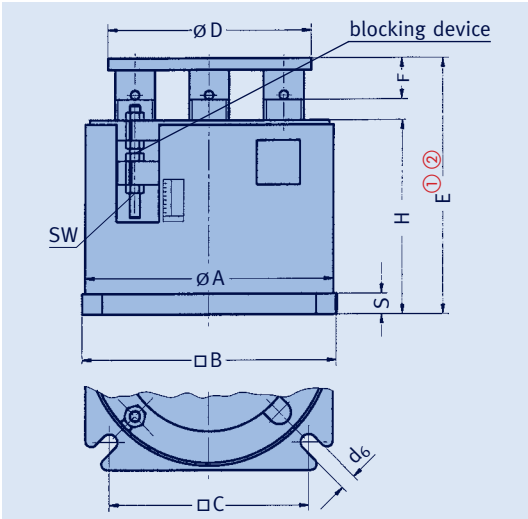

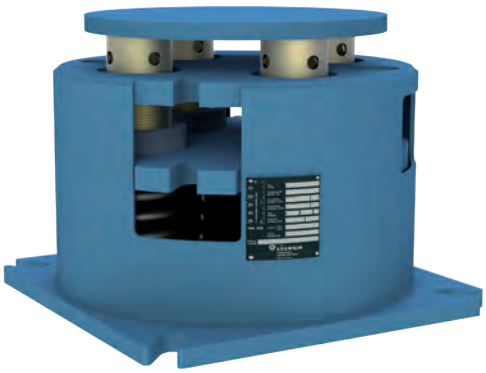

type ②	ø A	□ B	□ C	ø D	d_6	E ①②	F	H	S	SW	weight [lbs]
28 11 19	20.08	20.87	17.32	16.54	1.30	15.94	2.36	12.99	0.98	1.81	510
28 12 19	20.08	20.87	17.32	16.54	1.30	21.06	2.36	17.72	0.98	1.81	575
28 13 19	20.08	20.87	17.32	16.54	1.30	32.87	2.36	28.74	0.98	1.81	795
28 21 19	22.05	22.83	19.29	16.54	1.30	17.72	2.56	14.57	0.98	1.81	685
28 22 19	22.05	22.83	19.29	16.54	1.30	23.03	2.56	19.69	0.98	1.81	770
28 23 19	22.05	22.83	19.29	16.54	1.30	34.65	2.56	30.51	0.98	1.81	1015
28 31 19	24.02	24.80	20.87	17.72	1.30	18.11	2.56	14.96	0.98	1.81	840
28 32 19	24.02	24.80	20.87	17.72	1.30	23.43	2.56	20.08	0.98	1.81	950
28 33 19	24.02	24.80	20.87	17.72	1.30	35.04	2.56	30.91	0.98	1.81	1220
28 41 19	24.02	24.80	20.87	17.72	1.54	19.88	2.76	16.73	1.18	2.17	970
28 42 19	24.02	24.80	20.87	17.72	1.54	26.97	2.76	23.43	1.18	2.17	1150
28 43 19	24.02	24.80	20.87	17.72	1.54	42.32	2.76	37.99	1.18	2.17	1630
28 51 19	24.02	24.80	20.87	18.90	1.54	22.05	2.95	18.70	1.38	2.56	1090
28 52 19	24.02	24.80	20.87	18.90	1.54	29.53	2.95	25.79	1.38	2.56	1280
28 53 19	24.02	24.80	20.87	18.90	1.54	44.69	2.95	40.16	1.38	2.56	1730

Typical application

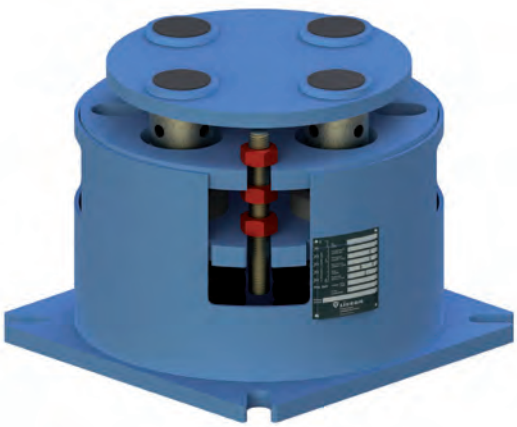

Spring support
type 28 11 19 to 28 53 19

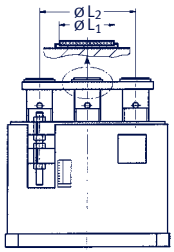

When using slide plates the sliding surfaces of the mating components should be fitted with stainless steel plating. This is indicated by the suffix 'SP' in the type designation (e.g., clamp base type 49 97 14-SP).

① Dimension 'E' is independent of the load adjustment; it changes on loading by the respective spring travel (see load table page 2.6). Adjustment possibility +1.18 inch [30mm].

② Type 28 is supplied as standard with a coated load plate without slide plate. When slide plates are used, the 'E' dimension increases by 0.08 inch [2mm]. Please note following tables.

type 28* with slide plate up to 356°F	ø L_1	ø L_2
28 1. 17	3.15	11.81
28 2. 17	3.15	11.81
28 3. 17	4.33	12.20
28 4. 17	4.33	12.20
28 5. 17	5.91	11.81

type 28* with slide plate up to 660°F	ø L_1	ø L_2
28 1. 16	3.15	11.81
28 2. 16	3.15	11.81
28 3. 16	4.33	12.20
28 4. 16	4.33	12.20
28 5. 16	5.91	11.81

* friction values of slide plates, see table on page 7.11.

Order details:
spring support type 28 .. ..
marking: ...
set load: ...lbs
travel: ...inch up/down

Angulating spring supports Type 20

Angulating spring supports type 20 D2 19 to 20 93 14
Standard design, delivery from stock.

① Dimension 'E' is independent of the load adjustment and changes on loading by the respective spring travel (see load table page 2.5). Adjustment possibility +1.97 inch [50mm].

② Connection possibilities: see pin diameter of weld-on brackets type 35 or dynamic clamps in product group 3.

Order details:
angulating spring support
type 20 .. ..
marking: ...
set load: ...lbs
travel: ...inch up/down

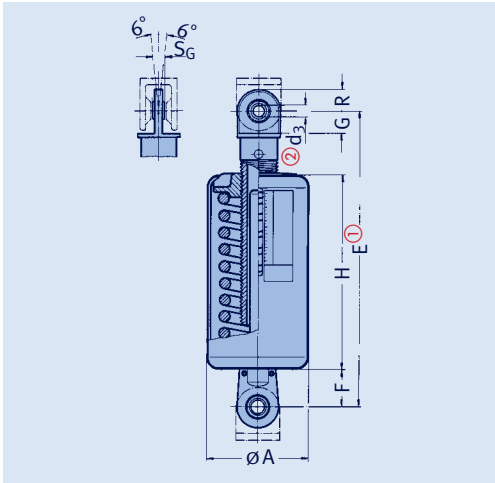

type	ø A	ø d_3 ②	E ①	F	G	H	R	S_G	weight [lbs]	weld-on bracket ②
20 D2 19	3.54	0.393	14.57	1.77	0.59	10.24	0.59	0.35	9	35 29 13
20 D3 19	3.54	0.393	24.21	1.77	0.59	19.09	0.59	0.35	15	35 29 13
20 12 14	3.54	0.393	14.57	1.77	0.59	10.24	0.59	0.35	9	35 29 13
20 13 14	3.54	0.393	24.21	1.77	0.59	19.09	0.59	0.35	18	35 29 13
20 22 14	4.53	0.472	14.96	1.97	0.75	10.24	0.79	0.39	15	35 39 13
20 23 14	4.53	0.472	24.21	1.97	0.75	18.70	0.79	0.39	25	35 39 13
20 32 14	4.53	0.590	15.35	2.28	0.83	10.24	0.91	0.47	15	35 49 13
20 33 14	4.53	0.590	25.39	2.28	0.83	19.49	0.91	0.47	26	35 49 13
20 42 14	6.10	0.590	17.32	2.28	0.83	11.81	0.91	0.47	33	35 49 13
20 43 14	6.10	0.590	27.56	2.28	0.83	21.26	0.91	0.47	55	35 49 13
20 52 14	7.09	0.787	18.50	2.56	1.22	12.40	1.18	0.63	53	35 59 19
20 53 14	7.09	0.787	28.74	2.56	1.22	21.85	1.18	0.63	82	35 59 19
20 62 14	8.66	0.787	21.06	2.56	1.22	14.57	1.18	0.63	99	35 59 19
20 63 14	8.66	0.787	32.87	2.56	1.22	25.79	1.18	0.63	152	35 59 19
20 72 14	9.65	1.181	25.59	3.94	1.97	16.93	1.77	0.87	154	35 69 19
20 73 14	9.65	1.181	37.01	3.94	1.97	27.56	1.77	0.87	223	35 69 19
20 82 14	9.65	1.181	28.94	3.94	2.05	19.88	1.77	0.87	192	35 69 19
20 83 14	9.65	1.181	44.29	3.94	2.05	34.45	1.77	0.87	306	35 69 19
20 92 14	10.83	1.968	32.09	5.12	2.44	21.65	2.36	1.38	265	35 79 19
20 93 14	10.83	1.968	47.24	5.12	2.44	35.83	2.36	1.38	401	35 79 19

Installation extensions for angulating spring supports type 20 D9 19 to 20 99 14

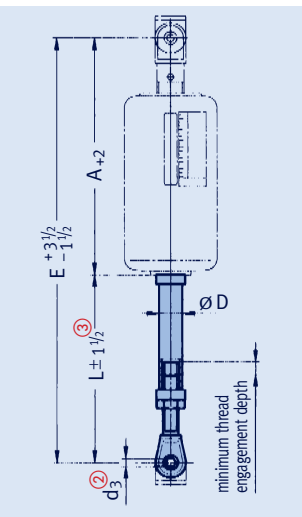

③ Installation dimensions > E_{max} with load reduction possible. Shorter L dimensions can be supplied, but then without adjustment possibility of ±1½ inch [±37.5mm].

Order details:
installation extension for angulating spring support
type 20 .9 ..
L = ...inch

type	for type	A_{+2}	ø D	ø d_3 ②	$E^{+3\frac{1}{2}}_{-1\frac{1}{2}}$ min	$E^{+3\frac{1}{2}}_{-1\frac{1}{2}}$ max	$L_{\pm 1\frac{1}{2}}$ min ③	$L_{\pm 1\frac{1}{2}}$ max	weight for L_{min} [lbs]	weight tube [lbs/inch]
20 D9 19	20 D2 19	12.80	1.65	0.393	20.67	48.03	7.87	35.24	2.4	0.21
20 D9 19	20 D3 19	22.44	1.65	0.393	30.31	48.03	7.87	25.59	2.4	0.21
20 19 14	20 12 14	12.80	1.65	0.393	20.67	48.03	7.87	35.24	2.4	0.21
20 19 14	20 13 14	22.44	1.65	0.393	30.31	48.03	7.87	25.59	2.4	0.21
20 29 14	20 22 14	12.99	1.89	0.472	21.06	57.68	8.07	44.69	2.8	0.25
20 29 14	20 23 14	22.24	1.89	0.472	30.31	57.68	8.07	35.43	2.8	0.25
20 39 14	20 32 14	13.07	2.36	0.590	21.54	57.48	8.46	44.41	5.6	0.47
20 39 14	20 33 14	23.11	2.36	0.590	31.57	57.48	8.46	34.37	5.6	0.47
20 49 14	20 42 14	15.04	2.36	0.590	23.50	57.48	8.46	42.44	5.6	0.47
20 49 14	20 43 14	25.28	2.36	0.590	33.74	57.48	8.46	32.20	5.6	0.47
20 59 14	20 52 14	15.94	2.99	0.787	26.57	76.77	10.63	60.83	17.6	0.82
20 59 14	20 53 14	26.18	2.99	0.787	36.81	76.77	10.63	50.59	17.6	0.82
20 69 14	20 62 14	18.50	2.99	0.787	29.13	76.77	10.63	58.27	17.6	0.82
20 69 14	20 63 14	30.31	2.99	0.787	40.94	76.77	10.63	46.46	17.6	0.82
20 79 14	20 72 14	21.65	3.50	1.181	32.87	75.79	11.22	54.13	23.4	1.18
20 79 14	20 73 14	33.07	3.50	1.181	44.29	75.79	11.22	42.72	23.4	1.18
20 89 14	20 82 14	25.00	3.50	1.181	36.22	95.47	11.22	70.47	23.4	1.18
20 89 14	20 83 14	40.35	3.50	1.181	51.57	95.47	11.22	55.12	23.4	1.18
20 99 14	20 92 14	26.97	4.02	1.968	39.96	94.88	12.99	67.91	36.4	1.71
20 99 14	20 93 14	42.13	4.02	1.968	55.12	94.88	12.99	52.76	36.4	1.71

Spring hanger trapezes Type 79

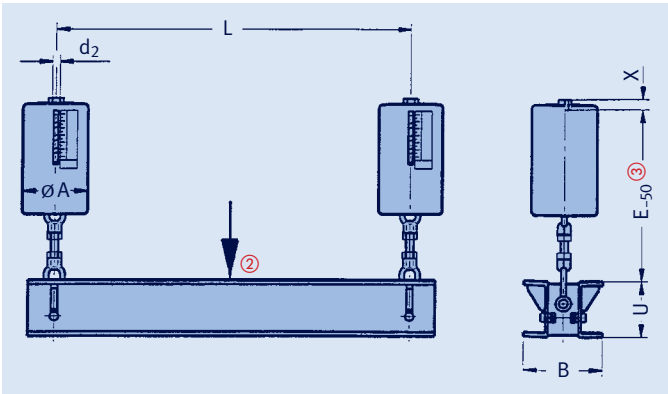

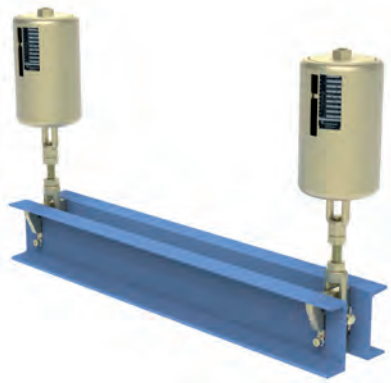

trapeze type	nominal load [lbs]②	ø d2	Lmax	E③ at travel range 1	2	3	U	A	B	X	weight [lbs] L=3 feet at travel range⑤ 1	2	3	± per inch [lbs]
79 D.①29	0.24	3/8 UNC	66.93	-	15.16	24.02	4	3.54	5.51	0.59	–	64	73	1.20
79 1. 29	0.56	1/2 UNC	66.93	11.42	15.16	24.02	4	3.54	5.51	0.59	61	66	76	1.20
79 2. 29	1.12	1/2 UNC	66.93	11.42	15.35	24.02	4	4.53	5.51	0.59	69	75	90	1.20
79 3. 29	2.25	5/8 UNC	35.43	12.40	16.14	24.80	4	4.53	5.51	0.79	72	79	96	1.20
79 3. 29	2.25	5/8 UNC	70.87	11.81	15.55	24.21	6	4.53	7.48	0.79	98	105	122	1.74
79 4. 29	4.50	3/4 UNC	55.12	13.58	17.72	26.97	6	6.10	7.48	0.98	122	138	170	1.74
79 4. 29	4.50	3/4 UNC	70.87	13.58	17.72	26.97	6	6.10	7.87	0.98	138	154	186	2.00
79 5. 29	8.99	1 UNC	49.21	15.94	19.49	28.74	6	7.09	7.87	1.18	175	192	243	2.00
79 5. 29	8.99	1 UNC	70.87	15.35	18.90	28.15	8	7.09	9.06	1.18	227	244	295	3.12
79 6. 29	17.98	1 1/4 UNC	49.21	17.52	22.05	33.07	8	8.66	9.84	1.38	307	346	444	3.12
79 6. 29	17.98	1 1/4 UNC	94.49	17.13	21.65	32.68	10.25	8.66	12.20	1.38	395	434	532	4.74
79 7. 29	26.98	1 1/2 UNC	70.87	19.88	24.80	35.43	10.25	9.65	12.20	1.77	480	550	660	4.74
79 7. 29	26.98	1 1/2 UNC	94.49	19.69	24.61	35.24	12	9.65	13.78	1.77	530	595	710	5.15
79 8. 29	35.97	1 3/4 UNC	47.24	22.05	28.54	43.31	10.25	9.65	12.20	1.97	545	640	845	4.74
79 8. 29	35.97	1 3/4 UNC	70.87④	21.85	28.35	43.11	12	9.65	13.78	1.97	590	690	890	5.15
79 9. 29	44.96	2 UNC	70.87④	24.02	30.91	45.28	12	10.83	13.78	2.36	835	955	1185	7.50

Spring hanger trapezes (bolted version) type 79 D. 29 to 79 9. 29

① The 4th digit of the type designation refers to the travel range of the spring hanger 1=1.97 inch [50mm], 2=3.94 inch [100mm], 3=7.87 inch [200mm].

② Permissible center loading of the other load cases, see table 4.4.1, page 0.6 (nominal load 26977 lbs [120kN], see load group 9).

③ The 'E' dimension increases on loading by the corresponding spring travel (see load table on page 2.5).

④ The 'L'max dimensions can be lengthened by up to 94.49 inch [2400mm] on reduction of the permissible center loading by 5% per 3.94 inch [100mm] extension.

⑤ When selecting the spring hanger trapeze the weight of the 'U' profiles and the clamp base weight must be added to the operating load.

⑥ When selecting the spring hanger trapeze, its total weight and the weight of the clamp bases must be added to the operating load.

Order details:
spring hanger trapeze type 79 .. 29
L = ...inch, marking: ...,
set load: ...lbs
travel: ...inch up/down

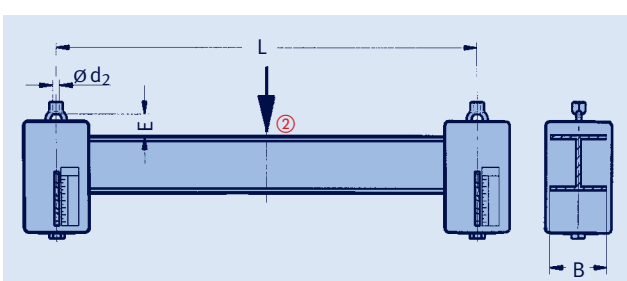

travel range①	'E' dimension approximately ③
1	30
2	55
3	105

① ... ③ see above.

trapeze type	nominal load [lbs]②	ø d2	Lmax	B	weight [lbs] L=3 feet at travel range⑥ 1	2	3	± per inch [lbs]
79 D.①21	0.24	3/8 UNC	55.12	3.15	–	35	44	0.7
79 1. 21	0.56	1/2 UNC	55.12	3.94	39	43	54	0.9
79 2. 21	1.13	1/2 UNC	62.99	3.94	53	59	74	1.1
79 3. 21	2.25	5/8 UNC	62.99	3.94	55	62	79	1.1
79 4. 21	4.50	3/4 UNC	68.90	4.72	85	101	133	1.5
79 5. 21	8.99	1 UNC	82.68	6.30	142	159	210	2.4
79 6. 21	17.99	1 1/4 UNC	82.68	7.87	231	270	368	3.4
79 7. 21	26.98	1 1/2 UNC	82.68	9.45	340	405	520	4.8
79 8. 21	35.97	1 3/4 UNC	84.65	10.24	393	489	693	5.2
79 9. 21	44.96	2 UNC	86.61	11.02	532	652	882	6.4

Order details: spring hanger trapeze type 79 .. 21, L = ...inch, marking: ..., set load: ...lbs, travel: ...inch up/down

Spring hanger trapezes (welded version) type 79 D. 21 to 79 9. 21

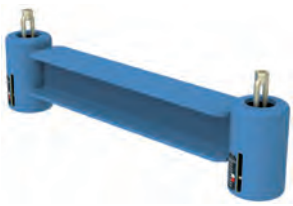

In restricted spaces this version can be supplied as a special design.

Sway braces
Type 27

Sway braces
type 27 D2 19 to 27 62 19

The maximum working travel including free stroke amounts to ±0.98 inch [±25mm]

① Load adjustment is made ex works according to customer specifications

② The 'E' dimension is independent of the load adjustment; adjustment possibility ±1½ inch [±37.5mm].

③ Connection possibilities: see pin diameter of weld-on brackets type 35 or dynamic clamps in Product Group 3.

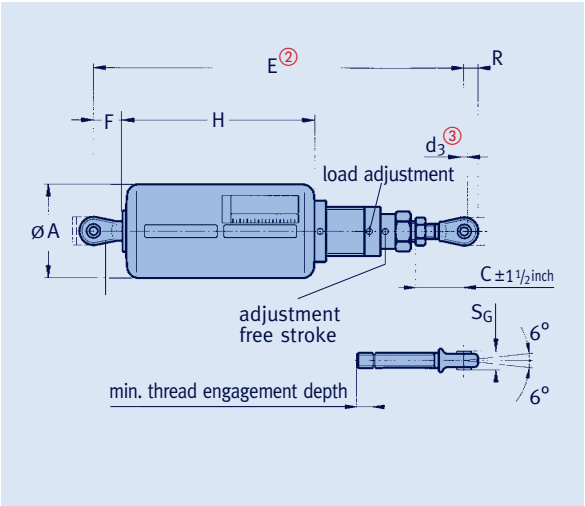

type	nominal load [lbs]	set load ① [lbs] min	max	spring rate [lbs/inch]	øA	C ±1½	ød3 ③	E ②	F	H	R	SG	weld-on bracket type ③	weight [lbs]
27 D2 19	117	27	94	23	3.54	3.54	0.393	25.20	1.97	11.61	0.59	0.36	35 29 13	12
27 12 19	281	93	233	47	3.54	3.54	0.393	25.20	1.97	11.61	0.59	0.36	35 29 13	13
27 22 19	562	187	467	95	4.53	3.54	0.472	25.59	1.97	11.81	0.75	0.40	35 39 13	22
27 32 19	1125	374	935	190	4.53	3.54	0.590	26.18	2.17	12.01	0.83	0.48	35 49 13	24
27 42 19	2250	749	1872	381	6.10	3.54	0.590	28.74	2.17	13.98	0.83	0.48	35 49 13	50
27 52 19	4495	1498	3745	761	7.09	3.94	0.787	31.89	2.95	14.96	1.18	0.63	35 59 19	86
27 62 19	8990	2997	7492	1522	8.66	3.94	0.787	34.45	2.95	17.52	1.18	0.63	35 59 19	136

Order details:
sway brace type 27 .2 19
marking: ...
set load: ...lbs
travel: ...inch up/down

Installation extensions for sway braces
type 27 D9 19 to 27 69 19

If required, sway braces can be supplied with installation extensions mounted at the factory.
An exceeding of the maximum lateral displacement of ±6° is to avoid.

④ Installation dimensions > E_{max} on load reduction possible. Shorter L dimensions can be supplied, but then without adjustment possibility of ±1½ inch [±37.5mm].

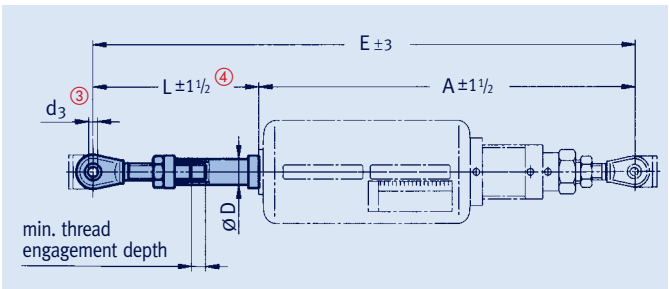

type	A±1½	øD	ød3 ③	E±3 min	E±3 max	L±1½ ④ min	L±1½ ④ max	weight for Lmin [lbs]	tube [lbs/inch]
27 D9 19	23.23	1.65	0.393	31.10	62.99	7.87	39.76	2.4	0.21
27 19 19	23.23	1.65	0.393	31.10	62.99	7.87	39.76	2.4	0.21
27 29 19	23.62	1.89	0.472	31.69	78.74	8.07	55.12	2.8	0.25
27 39 19	24.02	2.36	0.590	32.48	78.74	8.46	54.72	5.6	0.47
27 49 19	26.57	2.36	0.590	35.04	78.74	8.46	52.17	5.6	0.47
27 59 19	28.94	2.99	0.787	39.57	94.49	10.63	65.55	17.6	0.82
27 69 19	31.50	2.99	0.787	42.13	94.49	10.63	62.99	17.6	0.82

Order details:
installation extension
for sway brace
type 27 .9 19
L = ...inch

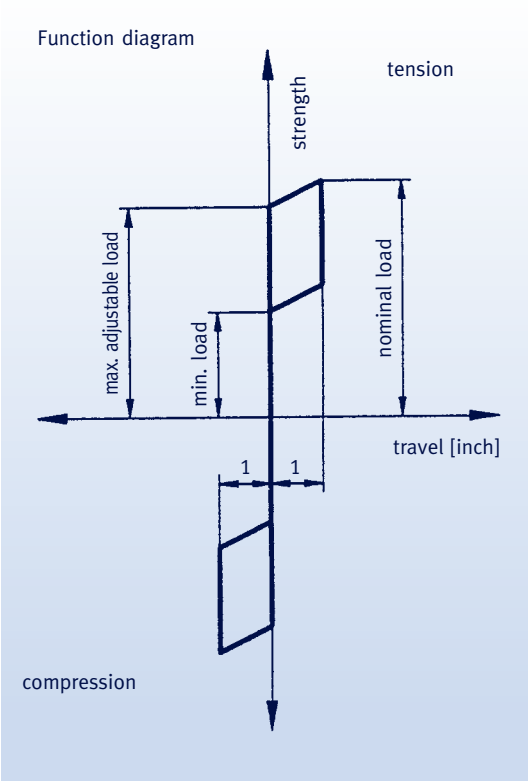

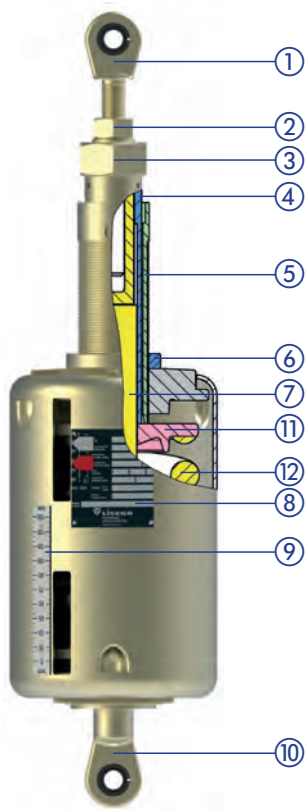

① upper ball bushing joint
② lock nut
③ lock nut
④ guide pipe
⑤ threaded pipe
⑥ lock nut
⑦ guide rod
⑧ type plate with travel scale
⑨ travel scale
⑩ lower ball bushing joint
⑪ spring plate
⑫ spring

Load and installation length are adjustable for the respective requirements (see installation and operating instructions).

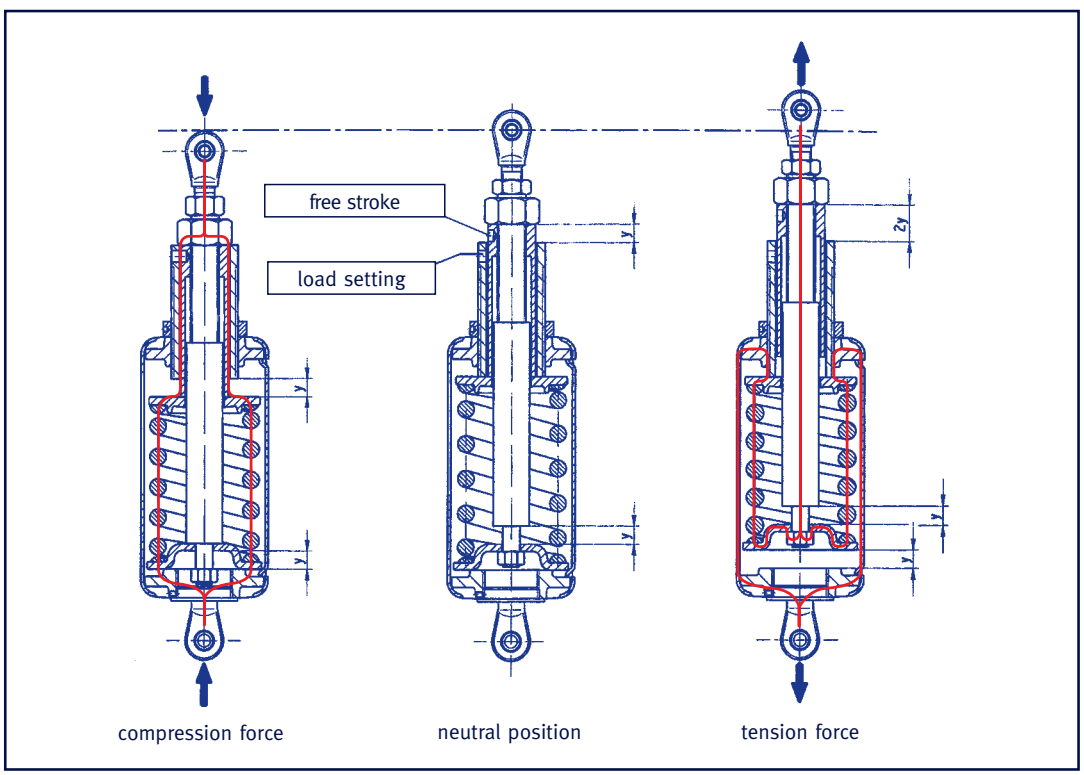

For LISEGA sway braces a free stroke of 0 – 0.98 inch [0 – 25mm] can be set. The travel is reduced in compression and tension directions in accordance with the free stroke selected.

Load transmission on alternating force direction

Telescopic spring supports Type 29

Spring supports, telescopic type 29 D1 27 to 29 93 27

As a special design of type 29 the telescopic spring supports are used for **small E dimensions**.

The sliding surfaces of the mating components should be fitted with stainless steel plating. This is indicated by the suffix 'SP' in the type designation (e.g., clamp base type 49 22 25-SP).

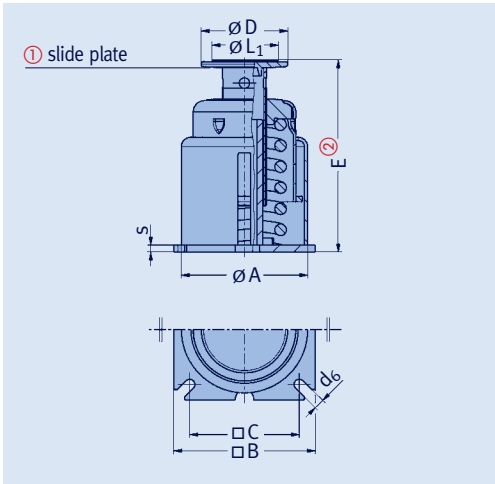

$$E\ [\text{inch}] = E \text{ at min. load [inch]} - \frac{\text{adjustment load [lbs]} - \text{min. load [lbs]}}{\text{spring rate [lbs/inch]}}$$

① The telescopic spring support is fitted as standard with a load plate with a PTFE slide plate. If required, this type can also be supplied with a high-temperature slide plate.

The 6th digit of the type designation denotes the design:
7 for standard design with PTFE slide plate (up to 356°F [180°C])
6 for design with high-temperature slide plate (up to 660°F [350°C]).

For friction values of sliding components see table on page 7.11.

② The 'E' dimension depends on the load setting; it changes on loading by the respective spring travel. Adjustment possibility +0.79 inch [+20mm]).

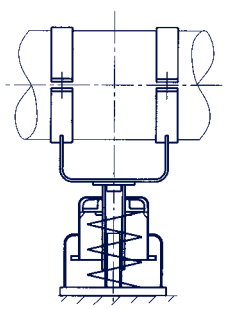

type ①	øA	B	C	øD	d_6	øL_1	s	E at min. load ②	E at max. load ②	min. load [lbs]	max. load [lbs]	spring rate [lbs/inch]	weight [lbs]
29 D1 2.	5.12	6.10	4.92	3.15	0.47	1.57	0.31	8.27	6.69	45	117	47.6	11
29 D2 2.	5.12	6.10	4.92	3.15	0.47	1.57	0.31	12.20	9.06	45	117	23.8	14
29 D3 2.	5.12	6.10	4.92	3.15	0.47	1.57	0.31	21.06	14.76	45	117	11.9	21
29 11 2	5.12	6.10	4.92	3.15	0.47	1.57	0.31	8.27	6.69	130	281	95.2	12
29 12 2	5.12	6.10	4.92	3.15	0.47	1.57	0.31	12.20	9.06	130	281	47.6	15
29 13 2.	5.12	6.10	4.92	3.15	0.47	1.57	0.31	20.87	14.57	130	281	23.8	22
29 21 2.	6.10	7.09	5.71	3.94	0.55	1.57	0.39	8.46	6.89	261	562	190	18
29 22 2.	6.10	7.09	5.71	3.94	0.55	1.57	0.39	12.40	9.25	261	562	95.2	23
29 23 2.	6.10	7.09	5.71	3.94	0.55	1.57	0.39	20.67	14.37	261	562	47.6	33
29 31 2.	6.10	7.09	5.71	3.94	0.55	1.57	0.47	8.66	7.09	524	1124	381	19
29 32 2.	6.10	7.09	5.71	3.94	0.55	1.57	0.47	12.60	9.45	524	1124	190	24
29 33 2.	6.10	7.09	5.71	3.94	0.55	1.57	0.47	21.26	14.96	524	1124	95.2	36
29 41 2.	7.68	8.66	7.09	4.72	0.71	2.56	0.47	9.25	7.68	1048	2248	761	33
29 42 2.	7.68	8.66	7.09	4.72	0.71	2.56	0.47	13.19	10.04	1048	2248	381	44
29 43 2.	7.68	8.66	7.09	4.72	0.71	2.56	0.47	22.05	15.75	1048	2248	190	64
29 51 2.	8.66	9.65	7.87	5.91	0.71	2.56	0.47	10.24	8.66	2097	4496	1522	53
29 52 2.	8.66	9.65	7.87	5.91	0.71	2.56	0.47	14.57	11.42	2097	4496	761	66
29 53 2.	8.66	9.65	7.87	5.91	0.71	2.56	0.47	23.23	16.93	2097	4496	381	95
29 61 2.	10.83	12.01	9.65	6.69	0.91	4.33	0.71	11.81	10.24	4195	8992	3045	97
29 62 2.	10.83	12.01	9.65	6.69	0.91	4.33	0.71	16.14	12.99	4195	8992	1522	117
29 63 2.	10.83	12.01	9.65	6.69	0.91	4.33	0.71	26.57	20.28	4195	8992	761	176
29 71 2.	11.81	12.99	10.43	7.87	0.91	4.33	0.79	12.80	11.61	8093	13489	4568	139
29 72 2.	11.81	12.99	10.43	7.87	0.91	4.33	0.79	17.13	14.76	8093	13489	2284	168
29 73 2.	11.81	12.99	10.43	7.87	0.91	4.33	0.79	26.57	21.85	8093	13489	1142	232
29 81 2.	11.81	12.99	10.63	7.87	1.06	5.91	0.87	14.17	13.19	11989	17985	6090	157
29 82 2.	11.81	12.99	10.63	7.87	1.06	5.91	0.87	19.69	17.72	11989	17985	3045	201
29 83 2.	11.81	12.99	10.63	7.87	1.06	5.91	0.87	32.87	28.94	11989	17985	1522	313
29 91 2.	12.80	14.57	11.61	9.65	1.30	5.91	0.98	15.75	14.76	14986	22481	7612	212
29 92 2.	12.80	14.57	11.61	9.65	1.30	5.91	0.98	21.85	19.88	14986	22481	3806	273
29 93 2.	12.80	14.57	11.61	9.65	1.30	5.91	0.98	34.45	30.51	14986	22481	1903	399

Order details:
spring support type 29 .. 2.
marking: ...
set load: ...lbs
travel: ...inch up/down

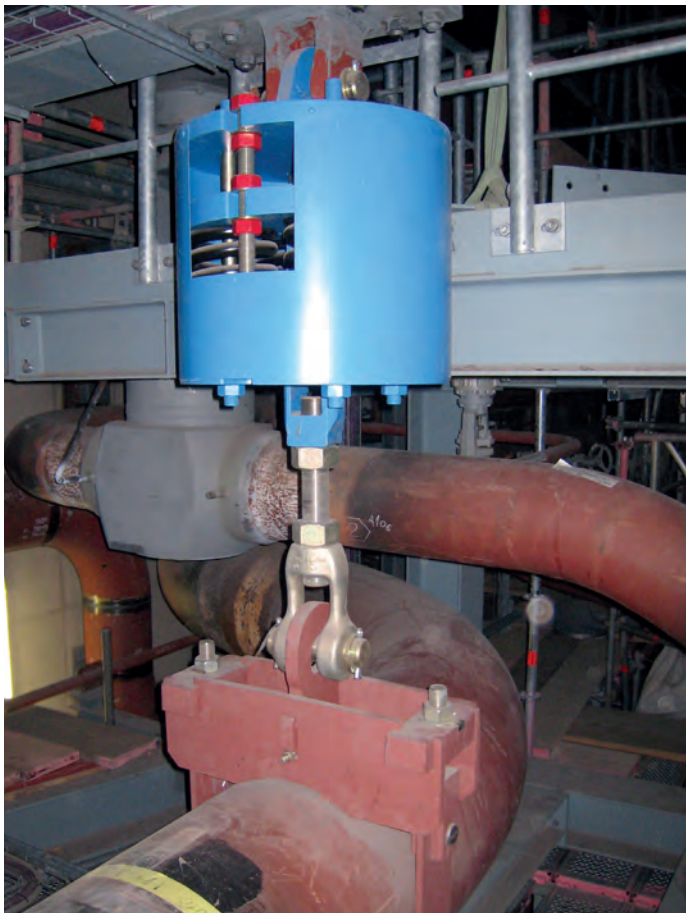

Installation and operating instructions
Types 21, 22, 25, 26, 29, 28, 20, 27

① upper connection
② travel scale
③ blocking device
④ name plate
⑤ lower connection
⑥ spring plate
⑦ cover plate
⑧ securing strap
⑨ support tube

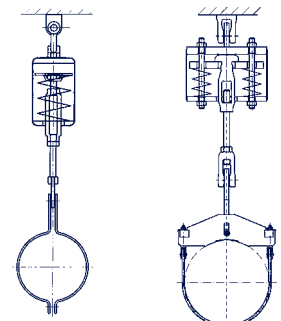

Spring hanger type 21 *type 22*

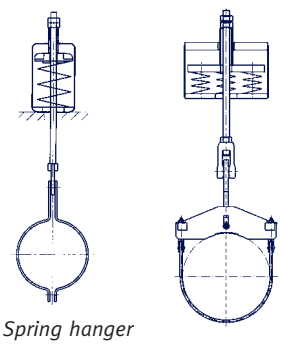

Spring hanger type 25 *type 26*

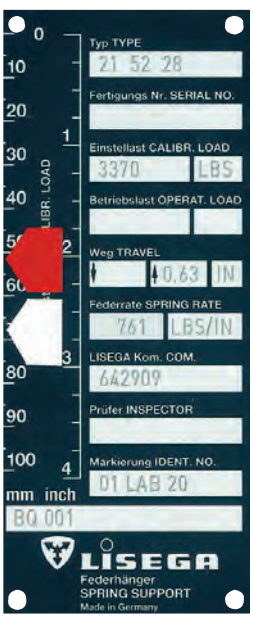

Name plate for spring hangers

1 Transport and storage

When transporting, care must be taken that connecting threads and blocking devices are not damaged. When storing in the open air the hangers must be protected from water and dirt.

2 Delivery condition

If not otherwise specified, LISEGA spring hangers are set and blocked at the desired cold position (installation condition). Special blocking devices fix the spring plates in both directions. The adjustment values can be read off the travel scale or name plate.

Stamped on the name plate are:

- **type number and if required serial number**
- **set load and spring rate**
- **operating load and travel**
- **marking and commission number**
- **inspector**

On the travel scale the theoretical hot position is marked with a red sticker and the theoretical cold one with a white one. In addition the position of the spring plate on the travel scale is stamped with an 'X'. The reading is made at the lower edge of the spring plate (at the upper edge for trapezes type 79 .. 11). The production number is stamped on the body of the spring hanger.

Depending on the connection the spring hangers are fitted at the top with an inner right-hand thread, a lug for connecting pins or a fixe support tube. The threads are greased and sealed with plastic caps. Depending on the design, the lower connection is fitted with a right-hand thread (turnbuckle) or, as with type 25/26, consists of a support tube for the connecting rod.

The spring supports types 28/29 are equipped with an adjustable support tube with a loosely seated but guided load plate. As delivered the support tube is screwed in and the thread greased.

3 Installation

When installing, the requirements of the **installation instructions for the piping systems** should also be observed, especially the desired installation position of the connecting rods over the whole load chain. There are two possibilities:

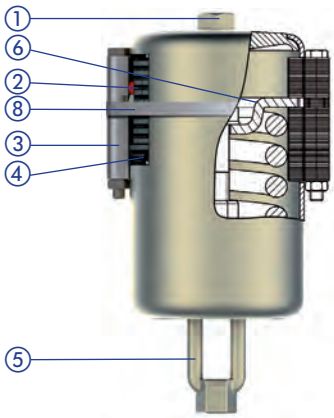

Spring hanger type 21 (blocked)

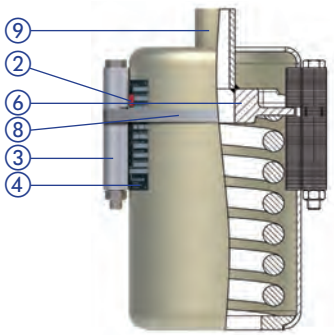

Spring hanger type 25 (blocked)

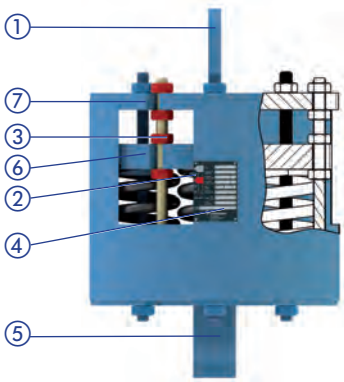

Spring hanger type 22 (blocked)

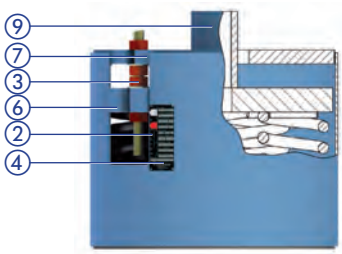

Spring hanger type 26 (blocked)

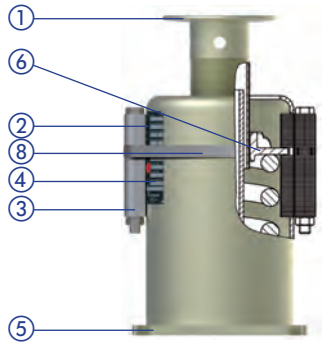

Spring support type 29 (blocked)

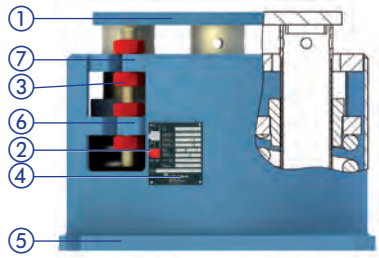

Spring support type 28 (blocked)

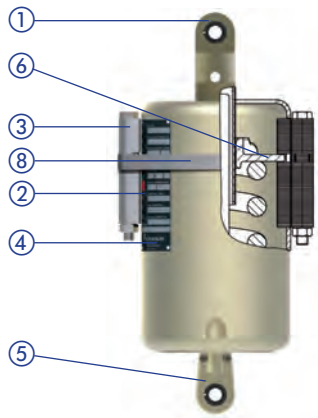

Angulating spring support type 20 (blocked)

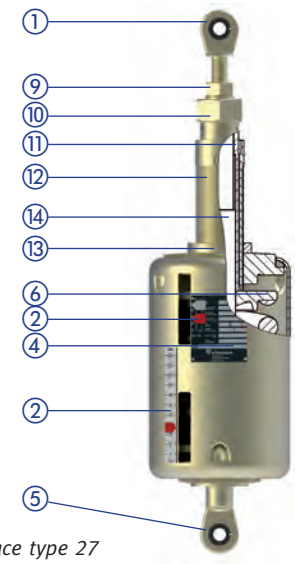

Sway brace type 27

A) The connecting rods are to be installed at an angle to correspond to the expected horizontal displacement of the pipe systems. A perpendicular position in operating condition is to be hereby expected.

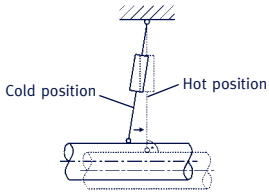

Rods vertical during plant operation

B) The connecting rods are to be installed vertically for better controllability. A controlled angled position is thereby permitted in operating conditions.

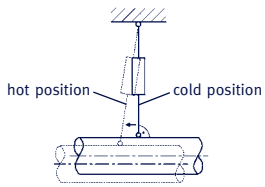

Rods vertical in installation condition

Uniform specifications should at all events apply for the whole plant.

The connecting rods and points must be connected by force-locking. Attention must be paid to the minimum engagement depth of the threaded components.

Installation of types 21, 22
The force-locked connection for type 21 is produced by screwing the connecting rods into the upper and lower connection threads. The lower connection thread is designed as a turnbuckle. Type 22 has a pin-lug upper connection. For adjustment the available turnbuckle length in the spring hanger in each case can be used.

Installation types 25, 26
Spring hangers types 25 and 26 are placed on the existing steelwork and correspondingly aligned. The position aligned is to be fixe against horizontal displacement. The force-locked connection is produced via the connecting rod, which is fed through the support tube and tightened and locked with two nuts.

① load plate or ball bushing joint at top
② travel scale
③ blocking device
④ name plate
⑤ base plate or ball bushing joint at bottom
⑥ spring plate
⑦ cover plate
⑧ securing strap
⑨ lock nut
⑩ lock nut
⑪ guide tube
⑫ threaded tube
⑬ lock nut
⑭ guide rod

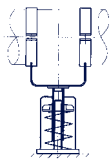

Spring support type 29

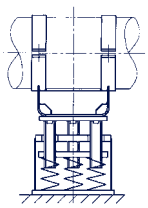

Spring support type 28

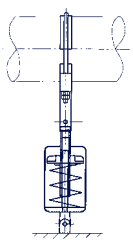

Angulating spring support type 20

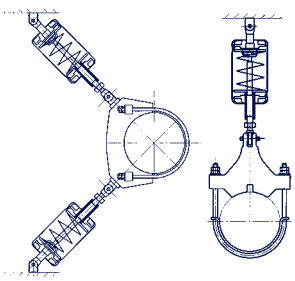

Sway brace type 27 angled arrangement

Sway brace type 27 simple arrangement

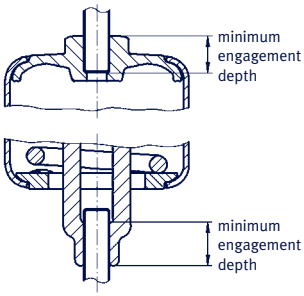

Minimum engagement depth of threaded rods by example of type 21

The blocking device for spring hangers and spring supports types 21, 25, 29 and 20 consist of sheet metal lamellas adjustable to any desired load position. Up to 3 blocking devices can be inserted into a spring hanger.

Installation of types 28, 29

The spring supports 28 and 29, are to be connected in the design location by welding or bolting the base plate to the building structure. The load distribution is applied through the load plate and an adjustable support tube (type 29), or several adjustable ones (type 28). To accommodate installation tolerances the support tubes may be further screwed out only to a maximum of 1.18 inch [30 mm]. The instructions on page 7.12 are to be followed for the correct installation of the slide plates.

Installation of type 20

The angulating spring supports are fitted at the top with an adjustable ball bushing joint and at the bottom with a fixed ball bushing joint or an installation extension – suitable for connection to a weld-on bracket type 35 or to the dynamic clamps type 36 or 37. After alignment of the angulating spring support the lower weld-on bracket is attached to the surrounding structure (see installation instructions for weld-on brackets type 35). The load distribution is applied through the upper pin connection (weld-on bracket or dynamic clamp) to the length-adjustable support tube. To accommodate installation length tolerances the support tube may be further screwed out by a maximum of 1.97 inch [50 mm].

Installation of type 27

The sway braces are fitted at the top with an adjustable ball bushing joint and at the bottom with a fixed ball bushing joint or an installation extension – suitable for connection to a weld-on bracket type 35 or to the dynamic clamp type 36 or 37. The load presetting, and if necessary the free stroke, are adjusted at works according to customer specifications. After alignment of the connection points the welding of the weld-on brackets and the connection of the connection pins of the brackets or dynamic clamps types 36/37 are carried out. The adjustable ball bushing joints permit regulation of the installation length by ±1.48 inch [±37.5 mm].

4 Deblocking

The spring hangers/supports may only be deblocked when the set load is fully applied on all the supports making up a support system. If this is the case the blocking devices can be easily removed. If the devices are jammed, the load actually applied does not agree with the theoretical setting (see point 5, load correction).

Procedures for types 21, 25, 29, 20

Removal of the securing strap:

The securing strap is removed with an appropriate tool. Great care must be taken that the free ends of the metal strap do not snap upwards in an uncontrolled way.

Removal of the blocking devices:

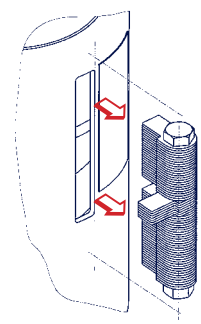

The device is removed from the casing.

When removing the blocking devices, proceed as a matter of principle in a systematic way, step by step, beginning with a fixed point or connection point. Never remove the devices by force!

Storage of blocking devices:

Type 29 with blocking devices attached

Removed blocking devices must either be stored separately or, for really safe keeping, fixed at the hanger by using the optional LISEGA permanent attachment.

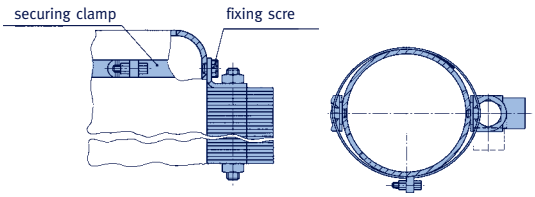

If the original blocking devices have been misplaced and the spring needs to be blocked, e.g. at revisions, they can be supplied by LISEGA at short notice.

Procedure for types 22, 26, 28

Removal of blocking devices:

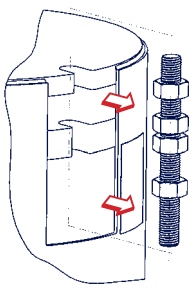

The blocking devices are removed from the casing.

Storage of blocking devices:

Removed blocking devices must either be stored separately or, insofar as sufficient space is available and freedom of movement for the spring plate is allowed, screwed to the cover plate.

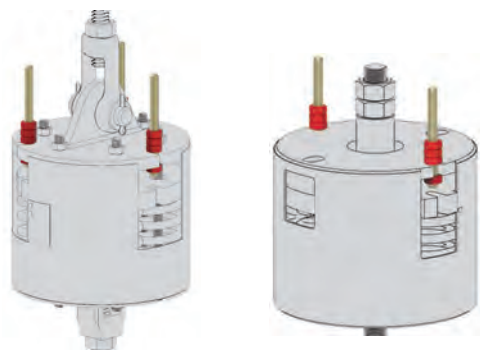

5 Load correction

Before every load adjustment, under all circumstances the technical department responsible must be consulted.

Type 21, 22
Load adjustment can be carried out by loosening or tightening the turnbuckle.

Type 25, 26
Load adjustment can be made by loosening or tightening the load nut.

Type 20, 28, 29
Load adjustment can be made by adjusting the support tube of the spring supports.

Load correction and adjustment of the free stroke, type 27
Load adjustment is made by rotating the outer threaded tube (A). For this, loosen the large lock nut (B). To maintain the E dimension the play thereby created must be balanced by readjusting the guide tube (C).

A free stroke can be set for the LISEGA sway braces. For this, the guide tube (C) opposite the inner guide rod (D) must be correspondingly screwed out (loosen middle lock nut (E)). The working travel is reduced in the direction of compression according to the free stroke selected.

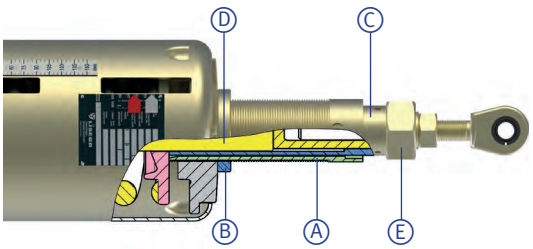

6 Auxiliary devices

To facilitate load adjustment or deblocking, an auxiliary installation device can be supplied for the higher load groups. The load transfer is then taken up by means of a hydraulic pump. This is operated by LISEGA technicians.

7 Inspection and maintenance

The flawless functioning of the spring hangers can be checked in every operating situation by noting the position of the spring plate.

Under normal operating conditions no maintenance is required.

The blocking devices of types 22, 26 and 28 consist of threaded studs and nuts by means of which any load setting desired can be carried out.

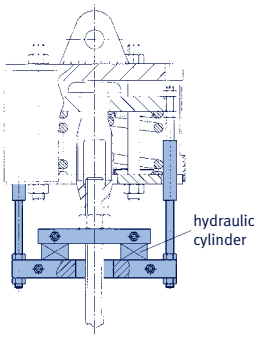

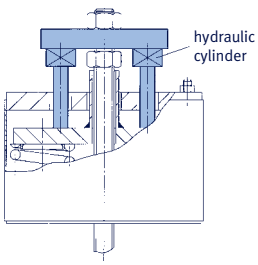

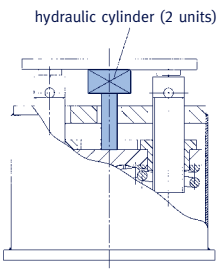

Snubbers, rigid struts, energy absorbers, viscoelastic dampers, dynamic clamps

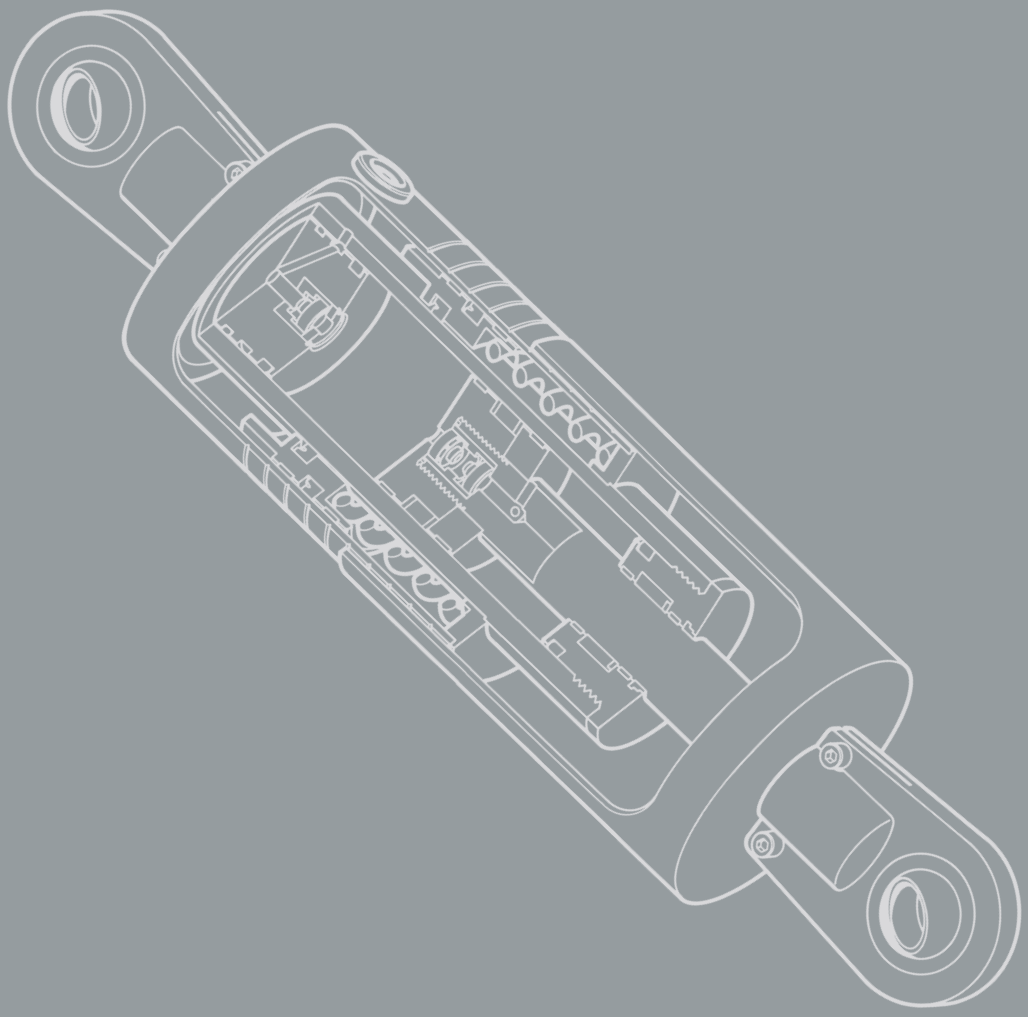

3

SNUBBERS, RIGID STRUTS, ENERGY ABSORBERS, VISCOELASTIC DAMPERS, DYNAMIC CLAMPS

PRODUCT GROUP 3

LISEGA

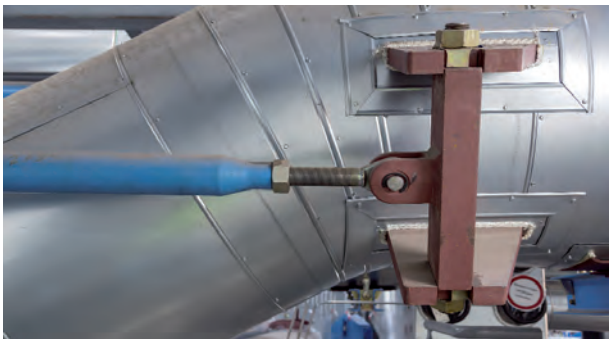

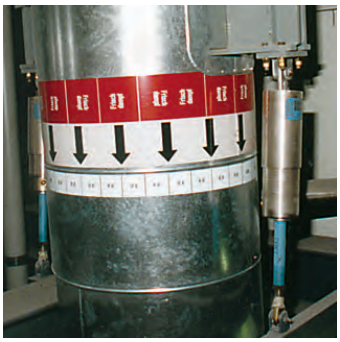

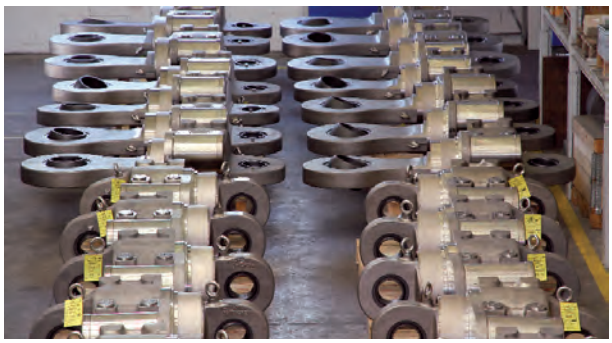

Snubbers, rigid struts, energy absorbers, viscoelastic dampers, dynamic clamps

Contents **Page**

Field of application 3.1
Main products 3.2
Instructions on use 3.3
Snubbers type 30, 31 . . . . . 3.4
Design features 3.5
Mode of operation and function 3.7
Function tests 3.8
Operational performance. 3.9
Permissible stress factors 3.10
Rigid struts type 39 . . . . . 3.11
Mode of operation and function 3.11
Energy absorbers type 32 . . . . . 3.12
Mode of operation and function 3.12
Viscoelastic dampers type 3D 3.13
Mode of operation and function 3.13
Pipe whip restraints type 3R 3.14
Dynamic clamps type 34, 36, 37 . . . . . 3.15
Mode of operation and function 3.15
Dynamic clamps type 34 . . . . . 3.17
Selection tables 3.19
Snubbers type 30 . . . . . 3.19
Snubbers type 31 . . . . . 3.20
Installation extensions type 33 . . . . . 3.21
Weld-on brackets type 35 . . . . . 3.22
Energy absorbers type 32 . . . . . 3.23
Viscoelastic dampers type 3D 3.25
Rigid struts type 39 . . . . . 3.27
Dynamic clamps type 36, 37 . . . . . 3.29
Shear lugs type 3L 3.44
Installation and operating instructions 3.45

Field of application

To avoid unacceptable stresses and moments in the piping systems, unplanned deflections in the piping or other plant components must be prevented. Thermal displacement must, however, not be obstructed!

Dynamic events

Whenever unplanned dynamic events occur, the support components in LISEGA product group 3 have the task of protecting the piping or other affected parts from damage.

The unwanted jolting displacement of plant components can be caused by:

A. Internal events, for example:

- **start-up / shut-down**
- **pressure impacts from valve operations**
- **water hammer**
- **boiler detonations**
- **pipe rupture**

B. External events, for example:

- **wind loads**
- **seismic events**
- **aircraft crashes**
- **explosions**

Components affected can be:

- **pipe systems**
- **pumps**
- **valve assemblies**
- **pressure vessels**
- **steam generators**
- **boilers, heat exchangers**

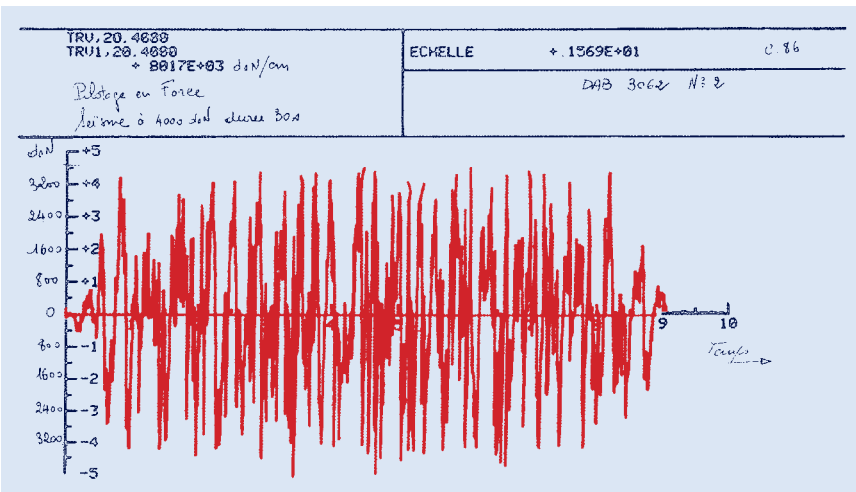

Diagram of an operating basis earthquake (O.B.E.)

Components in product group 3

For the absorption and transfer of dynamic load cases, specially designed supports are required. With product group 3, LISEGA provides a complete system in which all fields of application are covered by the corresponding ideal component. In this way the implementation of optimum concepts is possible for the user.

LISEGA product group 3 includes the following main products:

- **Snubbers (shock absorbers), types 30 and 31**
- **Rigid struts, type 39**
- **Energy absorbers, type 32**
- **Viscoelastic dampers, type 3D**
- **Pipe whip restraints, type 3R**

For proper implementation of the main components a complete range of connection possibilities are available:

- **Installation extensions, type 33**
- **Weld-on brackets, type 35**
- **Dynamic clamps, types 36 and 37**
- **Dynamic riser clamps, type 34**

The component connections are designed to be compatible with the LISEGA modular system and are subject to uniform calculation criteria. A **'table of permissible loads'** can be found on page 0.6 of the **'technical specifications'**.

The stress analyses forming the basis correspond to the international guidelines and codes and are additionally supported by practical experiments and testing.

Design Report Summaries according to **ASME III NF** and **RCC-M** are available.

Main products

3

Snubbers type 30, 31

The use of snubbers (shock absorbers) is pre-ferred in thermally operating plant components. In a dynamic event, snubbers provide an instantaneous, fixed, practically rigid connection between the component to be secured and the surrounding structure. In this way the dynamic energy from abrupt displacement can at once be transmitted and harmlessly dissipated. The thermal displacements during routine operation are not restricted.

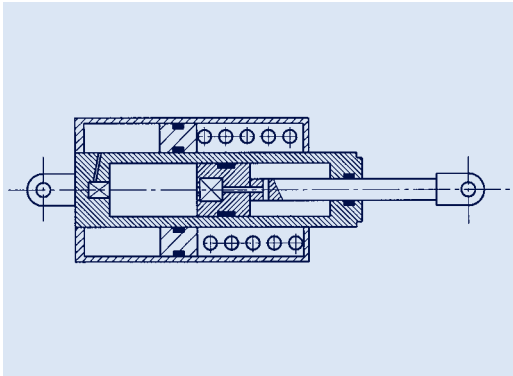

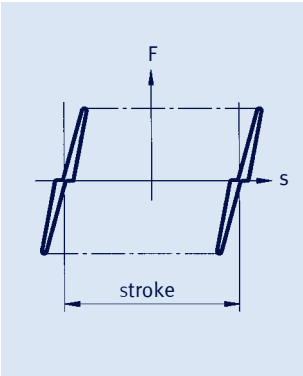

Rigid struts type 39

If operational displacements have to be restricted, e.g. in zero crossings, rigid struts are used. These components form rigid connections from connection point to connection point and do not permit movement of any kind in the axial direction. As they are fitted with articulated bearings they permit slight lateral displacement.

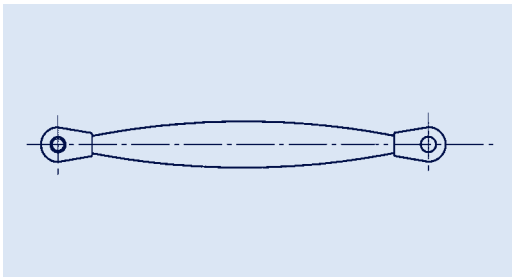

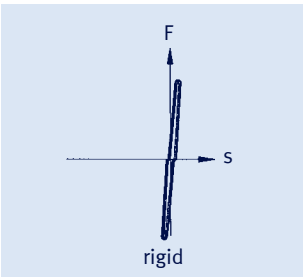

Energy absorbers type 32

If only minor operational displacement is expected at the load application point, energy absorbers can be used. These components allow slight movements limited in the end positions by an adjustable gap. Any components affected are protected from overloading because, due to the design, excess dynamic energy applied is transformed into plastic deformation of the absorber.

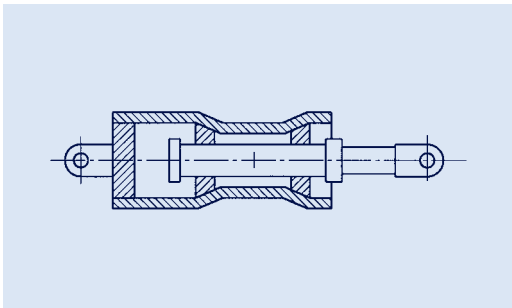

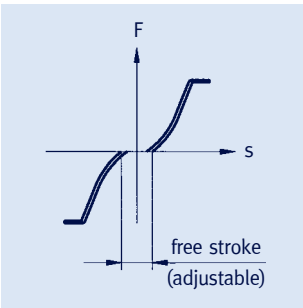

Viscoelastic dampers type 3D

Dynamic loads from mechanical, hydrodynamic or other external events can seriously damage plant components and pipe systems. Visco-elastic dampers can absorb these vibrations and load peaks. A highly viscous fluid thereby absorbs the kinetic energy and dampens any vibrations.

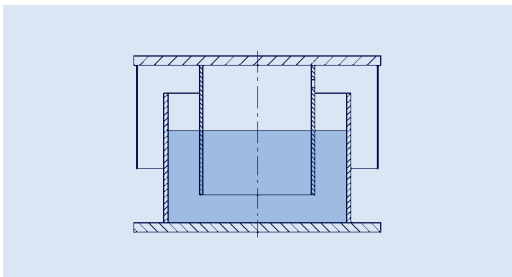

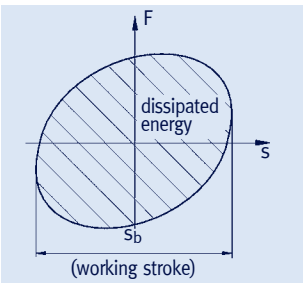

Pipe whip restraints type 3R

Pipe whip restraints are a specially designed type of pipe restraints. In the event of a bursting pipe system, it will transform the suddenly released kinetic energy into plastic deformation and hold the pipe in a safe position. Any overloading of the steelwork is thereby prevented.

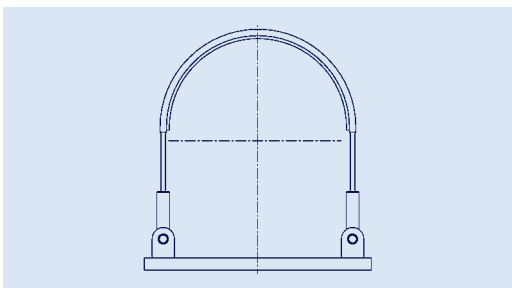

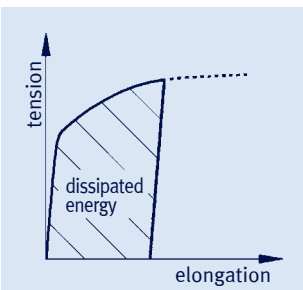

Instructions on use

The components in product group 3 are dynamically stressed. When using them, the following points must be observed for their effective functioning:

1. In the conception of **dynamic fixed points** the rigidity of the **whole system**, i.e. of all components in the support chain, must be taken into account.

2. In the selection of the sizes to be used, the **sum of all loads occurring** must be considered.

3. For given loads it must be clearly determined **beyond all doubt which design load** (H, HZ, HS and/or Level A, B, C, D) the data corresponds to. The **'table of permissible loads'** on page 0.6 of the **'technical specifications'** must be observed.

4. The stroke length of snubbers should not be fully utilized. A **travel reserve of 0.39inch [10mm]** in both directions is recommended.

5. When arranging components, **sufficient lateral freedom of movement** must be ensured so that no jamming occurs at the connections.

6. In the case of **parallel arrangement of snubbers** it is recommended to take load reserves into account. Instead of 50% in each case, both snubbers should be designed to take at least 70% of the calculation load.

7. The **installation drawings** should clearly indicate the degree of freedom of possible angulation of the components.

8. Any necessary torque values for threaded connections in the structural attachments should be indicated.

9. Before commissioning the plant, all support points should once again be **visually inspected**.

10. The **LISEGA instructions for commissioning** are to be observed, as well as inspection and maintenance recommendations.

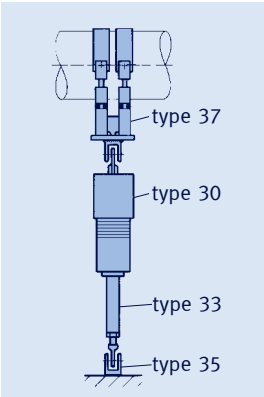

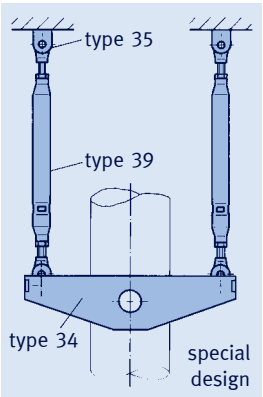

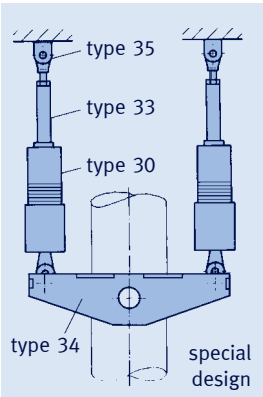

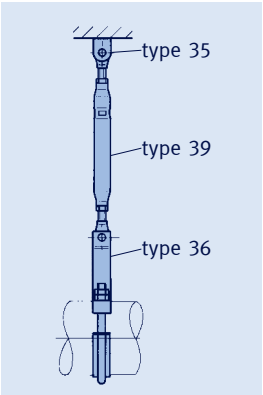

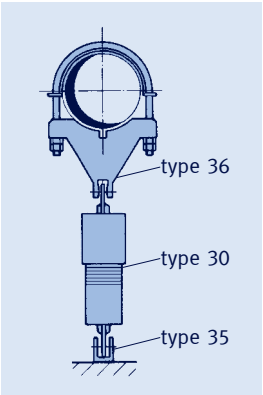

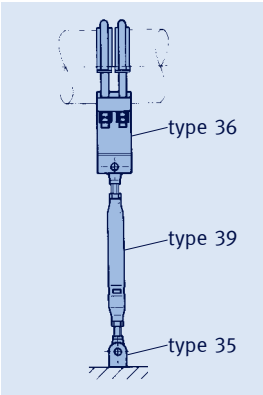

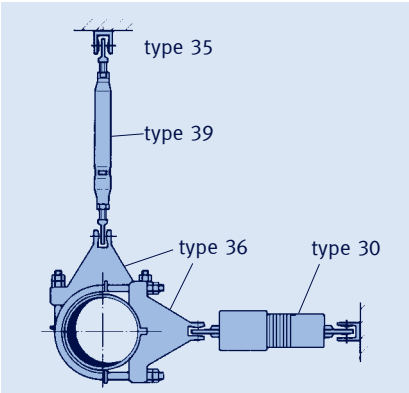

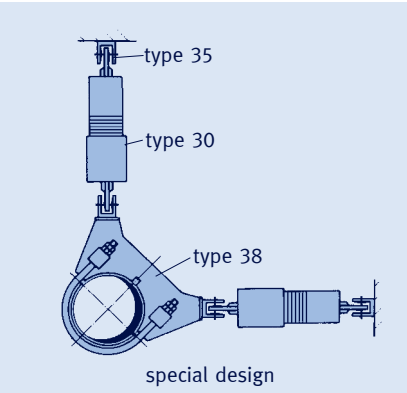

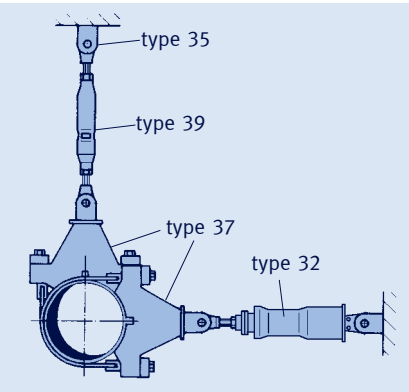

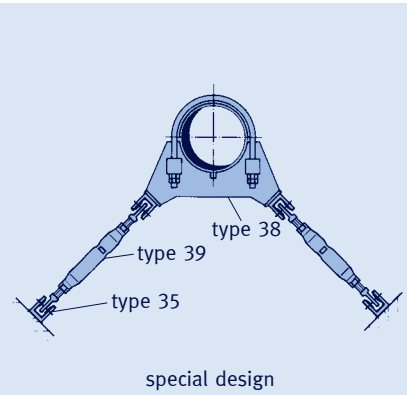

Snubbers Type 30, 31

LISEGA snubbers have stood the test of time in practical applications for well over four decades and have thereby proven their outstanding reliability. Extensive operational experience has, together with continuous further development, led to highly acclaimed state-of-the-art products and to worldwide market leadership.

Access to snubbers after installation is almost always difficult and, due to possible danger to personnel from radiation when installed in nuclear power plants, is subject to stringent safety regulations. For this reason the most stringent demands are made on reliable, maintenance-free, continuous functionality.

For the reliable operational safety of snubbers, besides the function principle and whole design, the highest quality of critical components is crucial:

- **sealing systems**
- **piston and rod guides**
- **hydraulic fluid**
- **sliding surfaces**
- **corrosion-resistant materials**
- **corrosion-free interiors**
- **control valves**

The most common cause of failure in snubbers is usually premature wear and tear and corrosion. For this reason LISEGA snubbers are made of corrosion resistant materials. In addition, any form of metallic contact within the unit is eliminated by the use of special guide bands.

Snubbers type 30

At LISEGA, sealing systems, guides and hydraulic fluid are certified by reliable qualification procedures to give at least 23 years of trouble-free operation under normal operating conditions in a nuclear power station.

The following quality features prove the superior functioning and long life of LISEGA snubbers:

- **corrosion-resistant materials**
- **special sealing systems**
- **vibration-resistant special guides**
- **pressurized hydraulic systems**
- **dynamic functional behavior**
- **exchangeable valves (type 31)**
- **tested and approved for min. 23 years maintenance-free operation**
- **60-year design life**
- **certified by suitability tests according to KTA 3205.3**
- **approvals according to ASME-NCA 3800**

Final inspection of snubbers type 31

Design features
Snubbers Type 30, 31

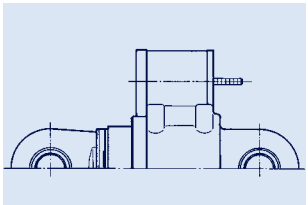

Design features

The snubbers form a closed hydraulic system **without external bolted pressure fittings.** The individual parts of the units are connected **without welding** by precision fit and screw connections, and are mechanically secured.

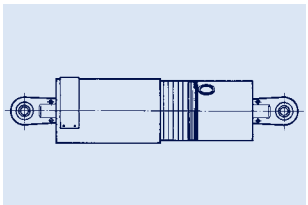

As a **protection against corrosion**, LISEGA snubbers are manufactured exclusively from **corrosion resistant materials**. The connecting lugs are made of electro galvanized carbon steel.

The **guides on piston rods and pistons** are made of a special friction-resistant, non-metallic material.

The **compensating reservoir** is sealed against the atmosphere by a preloaded piston so that slight **excess pressure is maintained in the hydraulic system.** This ensures the permanent functioning of all seals and the positive feed of hydraulic fluid to the cylinder regardless of the installed orientation.

The **control valves** are vital for dynamic function. To achieve high functional accuracy the valve parameters have been optimized by extensive testing and special calculation models.

Seals

The decisive design features for long-lasting function are the sealing systems. Besides the hydraulic fluid and guide bands, they form part of the non-metallic materials and are therefore exposed to natural aging and wear.

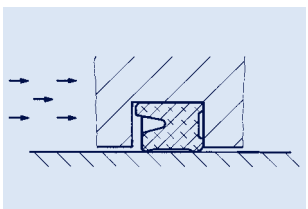

The most important requirement for a long-lasting sealing effect is the choice of the correct sealing material. The crucial factor thereby is the seal's restitution behavior ('shape memory') or compression set, providing the lowest possible stress relaxation.

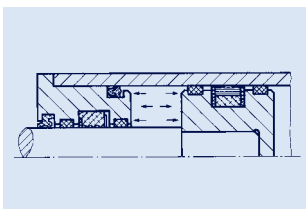

For optimum utilization of material properties the special shape of the seals are also important, while for final functional efficiency the best combination of the following features are critical:

- **thermal resistance**
- **radiation resistance**
- **resistance to wear, especially high-frequency vibrations**
- **good restitution behavior ('shape memory')**
- **good dry run characteristics**
- **limited tendency to diffusion in seal surfaces**
- **minimal transfer from static to sliding friction (stick-slip effect)**

A special mixture of **fluorelastomer VITON** has proved to offer the optimum solution here. In addition, the following prerequisites must be fulfilled to gain full benefit from the special characteristics:

- **special sealing geometry**
- **supporting composite materials**
- **optimum consistency (mixture proportions)**
- **optimized hardening**
- **precision of sliding surfaces**
- **design of the installation spaces for defined preloading of the seals**

Ordinary seals do not fulfill these demands in snubbers and have been shown to lead to premature failure. For this reason, as early as 1984 LISEGA, in collaboration with a renowned seal manufacturer, began to develop **specific sealing systems** that have since proved themselves in practice.

In 1992, after other successful certification procedures through artificial aging and long-term trials, a certification process for LISEGA snubbers was conducted on behalf of a European nuclear operator. The result: a **maintenance-free operating period of min. 23 years in nuclear applications was confirmed.**

Design features
Snubbers Type 30, 31

Type 30

Connection possibilities

A special range of connection components and adapters are available, so that in the event of an exchange the existing connections on site can still be used.

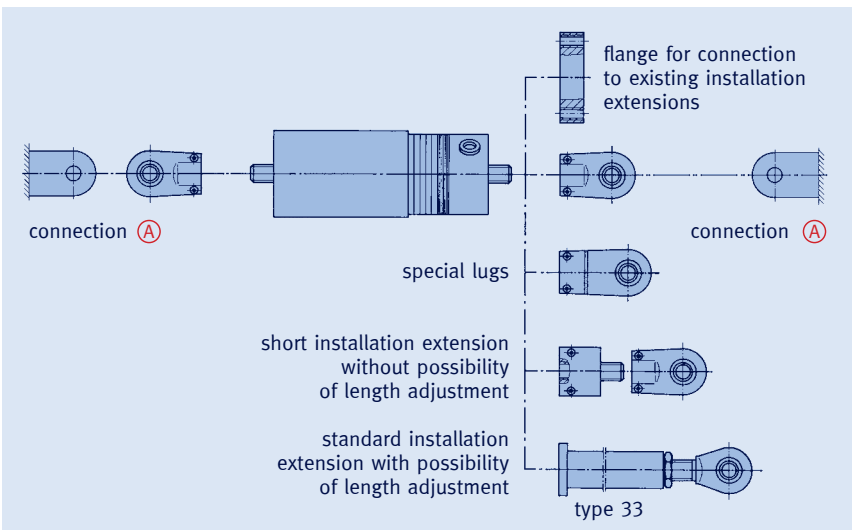

Ⓐ Connection possibilities: See pin diameters of weld-on brackets type 35 or dynamic clamps in product group 3.

① Control valves to achieve greater functional accuracy (type 30: internal).

② Name plate with all technically relevant data.

③ Control indicators: The piston position of the snubbers can be read off on all sides via the scale rings on the snubber casing. A robust steel casing connected to the piston rod serves as an indicator and at the same time protects the piston rod from mechanical damage, pollution and radiant heat.

④ Connection lugs (carbon steel) electro galvanized (only type 30).

⑤ Inspection glass in the compensating reservoir / indicator bar. The fluid level of the reservoir is shown by the position of the reservoir piston. For type 30 the minimum level can be checked through the inspection glass; for type 31 there is a marked indicator bar at the rear of the external compensating reservoir.

⑥ The reservoir is sealed against the atmosphere by means of a spring loaded piston so that slight excess pressure in the hydraulic system constantly keeps the seals under slight pressure (type 30: located inside).

✓ Corrosion resistant materials.

✓ Radiation-resistant, wear-resistant seals.

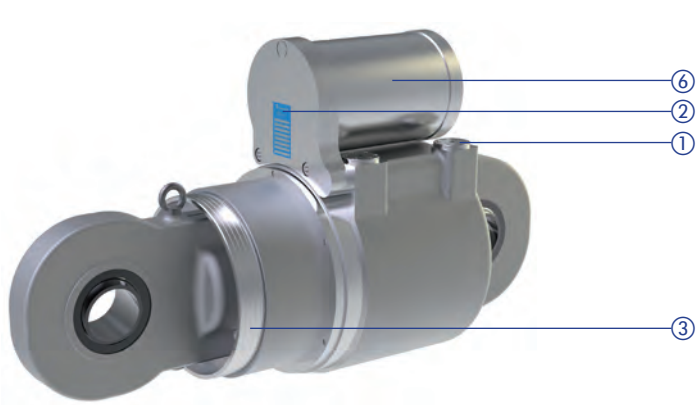

Type 31

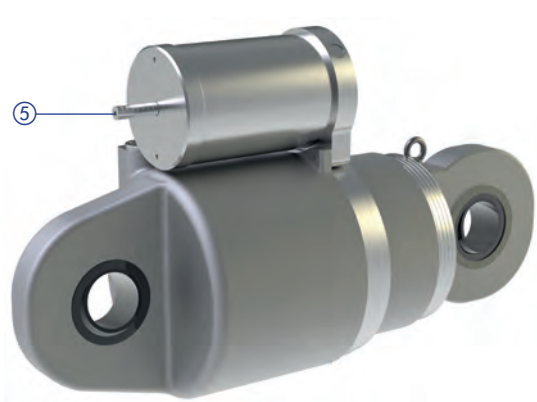

For details of design and materials see **technical specifications** page 0.1.

Mode of operation and function Snubbers Type 30, 31

In the event of an impact on the component to be secured, an instantaneous, practically rigid connection is to be made between the component and a fixed point on the surrounding structure.

Function

Control valves

The function of the LISEGA hydraulic snubbers type 30 is controlled by a main control valve (B) positioned axially in the hydraulic piston (A). On slow displacement of the piston (≤ 4.72inch/min [≤ 2mm/s]) the valve is held open by spring force and the hydraulic fluid can freely flow from one cylinder chamber into the other. On rapid piston displacement above a velocity limit (approximate > 4.72inch/min [> 2mm/s]), back pressure develops on the valve disk and closes the valve. The hydraulic flow is interrupted and the displacement blocked. Due to the compressibility of the hydraulic fluids, damaging load peaks are also prevented.

On displacement in pressure direction, the compensating valve (D) also closes almost synchronously with the piston valve.

If the pressure on the closed valve is reduced, e.g. by reversal of the displacement direction, the valve opens independently.

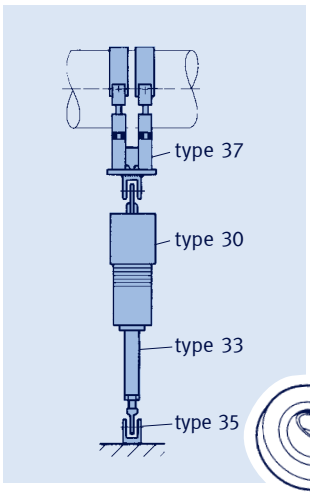

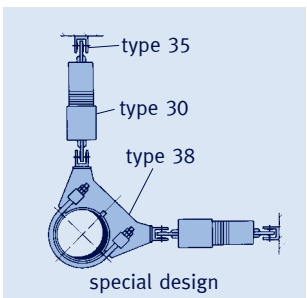

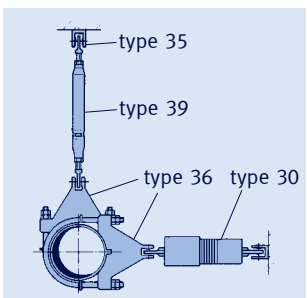

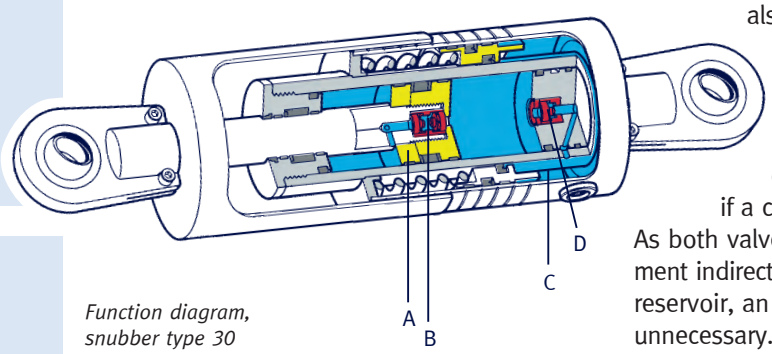

Function diagram, snubber type 30

Bypass

To prevent the valves from remaining in a blocked condition they are designed with a bypass system. This permits a gentle after-flow at continuous force and ensures the safe opening of the valves in both cylinder chambers through rapid pressure balance. The compensating valve works synchronously with the main valve in the same way.

Compensating reservoir

To balance the piston rod volume, as well as to change the volume of hydraulic fluid on change of temperature, volume compensation via a co-axially arranged compensating reservoir (C) takes place. The connection between reservoir chamber and the working cylinder is regulated by the compensating valve (D).

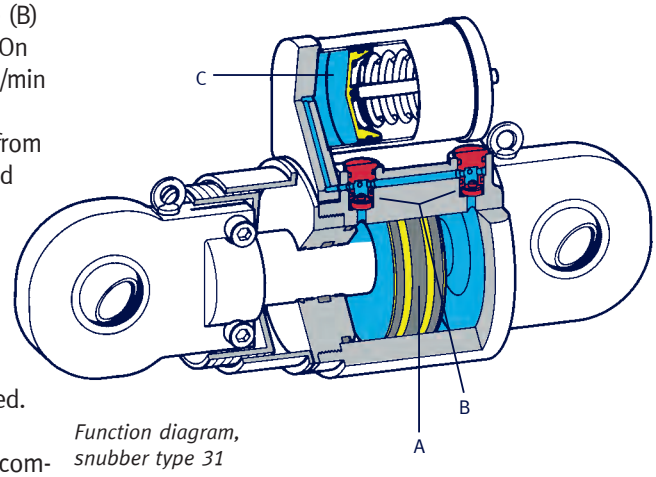

Function diagram, snubber type 31

Large bore design type 31

The mode of functioning of the LISEGA hydraulic snubbers type 31 is based in principle on the same concept as for type 30. The particularities of size require a different arrangement of the compensating reservoir (C). At the same time a different arrangement of the valves are also necessary. The valves (B) work similarly to those on type 30. Here too, the flow of hydraulic fluid in the respective direction of movement is interrupted by closure of the corresponding valve if a certain limit of velocity is exceeded. As both valves stand with the given arrangement indirect connection with the compensating reservoir, an additional compensating valve is unnecessary.

In service testing

The valve system is designed to be replaceable, so that all the snubbers type 31 need not be removed for routine function testing. In this way, in the event of a recurrent test only the valve units are replaced by a previously certified valve assembly. A special shut-off device thereby prevents loss of fluid. The replaced valve assembly can subsequently be tested on a test snubber and prepared for future use. This design meet the intent of sub component testing according to ASME OM Code, Subsection ISTD.

Function Tests
Snubbers type 30, 31

3

Especially stringent safety demands in the nuclear field require flawless proof of the function parameters for snubbers. This applies both to initial delivery inspection and to recurrent tests.

The LISEGA test technology is permanently improved in-house and complies with the most up-to-date technical standards. The test benches function as dynamic Hydropuls® units with optional force- or travel-controlled excitation. The frequency bands range from 0.5 – 30Hz, and the test loads from 112 up to 1,930,000lbs [0.5 up to 8600kN]. For standard tests LISEGA has test facilities of its own manufacture in different factories and in various sizes. Mobile units are often used on site at customer request. The test facilities are used worldwide today and are operated by the customers' own personnel.

Variable test programs permit the testing of all snubber makes.

LISEGA test benches are also manufactured for customers.

All LISEGA's test benches are calibrated at regular intervals on the basis of DIN EN ISO 7500 with calibrated load cells and measurement amplifiers.

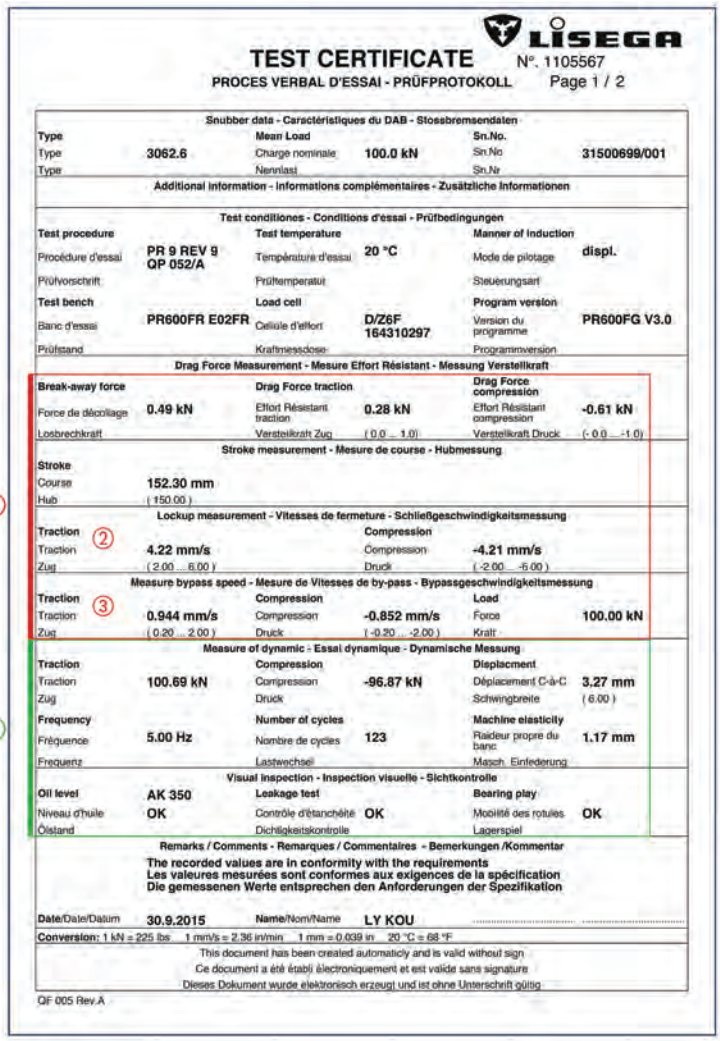

LISEGA

TEST CERTIFICATE N°. 1105567

PROCES VERBAL D'ESSAI - PRÜFPROTOKOLL Page 1 / 2

Snubber data - Caractéristiques du DAB - Stossbremsendaten					
Type		**Mean Load**		**Sn.No.**	
Type	3062.6	Charge nominale	100.0 kN	Sn.No	31500699/001
Type		Nennlast		Sn.Nr	
Additional information - Informations complémentaires - Zusätzliche Informationen					
Test conditiones - Conditions d'essai - Prüfbedingungen					
Test procedure		**Test temperature**		**Manner of induction**	
Procédure d'essai	PR 9 REV 9 QP 052/A	Température d'essai	20 °C	Mode de pilotage	displ.
Prüfvorschrift		Prüftemperatur		Steuerungsart	
Test bench		**Load cell**		**Program version**	
Banc d'essai	PR600FR E02FR	Cellule d'effort	D/Z6F 164310297	Version du programme	PR600FG V3.0
Prüfstand		Kraftmessdose		Programmversion	
Drag Force Measurement - Mesure Effort Résistant - Messung Verstellkraft					
Break-away force		**Drag Force traction**		**Drag Force compression**	
Force de décollage	0.49 kN	Effort Résistant traction	0.28 kN	Effort Résistant compression	-0.61 kN
Losbrechkraft		Verstellkraft Zug	(0.0 ... 1.0)	Verstellkraft Druck	(-0.0 ... -1.0)
Stroke measurement - Mesure de course - Hubmessung					
Stroke					
Course	152.30 mm				
Hub	(150.00)				
Lockup measurement - Vitesses de fermeture - Schließgeschwindigkeitsmessung					
Traction ②			**Compression**		
Traction	4.22 mm/s		Compression	-4.21 mm/s	
Zug	(2.00 ... 6.00)		Druck	(-2.00 ... -6.00)	
Measure bypass speed - Mesure de Vitesses de by-pass - Bypassgeschwindigkeitsmessung					
Traction ③		**Compression**		**Load**	
Traction	0.944 mm/s	Compression	-0.852 mm/s	Force	100.00 kN
Zug	(0.20 ... 2.00)	Druck	(-0.20 ... -2.00)	Kraft	
Measure of dynamic - Essai dynamique - Dynamische Messung					
Traction		**Compression**		**Displacment**	
Traction	100.69 kN	Compression	-96.87 kN	Déplacement C-à-C	3.27 mm
Zug		Druck		Schwingbreite	(6.00)
Frequency		**Number of cycles**		**Machine elasticity**	
Fréquence	5.00 Hz	Nombre de cycles	123	Raideur propre du banc	1.17 mm
Frequenz		Lastwechsel		Masch. Einfederung	
Visual inspection - Inspection visuelle - Sichtkontrolle					
Oil level	AK 350	**Leakage test**		**Bearing play**	
Niveau d'huile	OK	Contrôle d'étanchéité	OK	Mobilité des rotules	OK
Ölstand		Dichtigkeitskontrolle		Lagerspiel	

Remarks / Comments - Remarques / Commentaires - Bemerkungen /Kommentar

The recorded values are in conformity with the requirements
Les valeures mesurées sont conformes aux exigences de la spécification
Die gemessenen Werte entsprechen den Anforderungen der Spezifikation

Date/Date/Datum 30.9.2015 **Name/Nom/Name** LY KOU

Conversion: 1 kN = 225 lbs 1 mm/s = 2.36 in/min 1 mm = 0.039 in 20 °C = 68 °F

This document has been created automatically and is valid without sign
Ce document a été établi électroniquement et est valide sans signature
Dieses Dokument wurde elektronisch erzeugt und ist ohne Unterschrift gültig

QF 005 Rev.A

Inspection report with test diagrams page 1

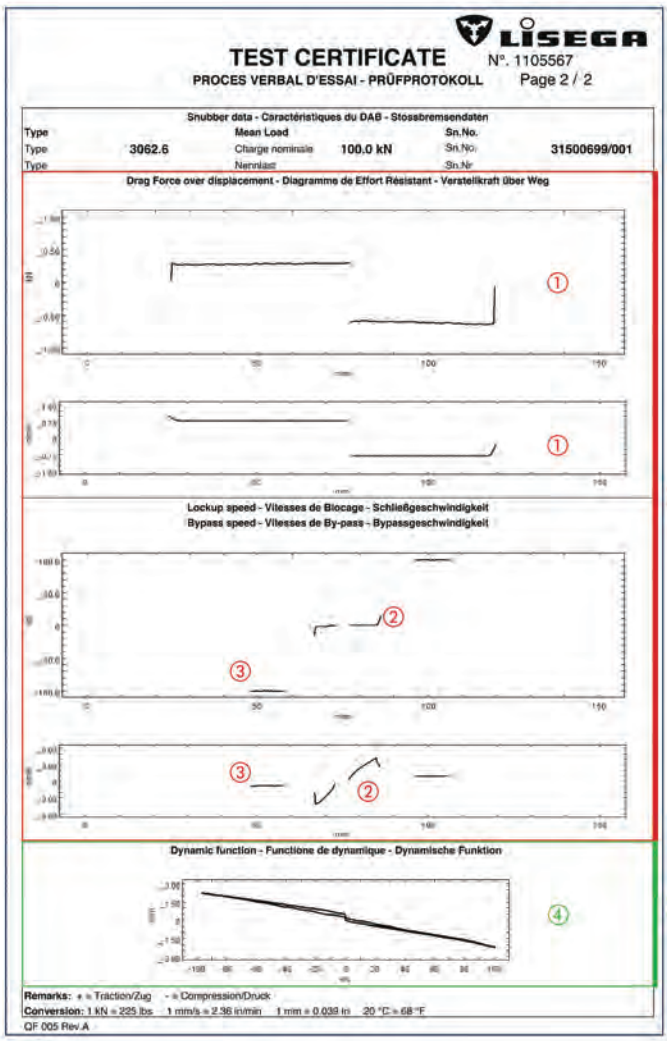

LISEGA

TEST CERTIFICATE N°. 1105567

PROCES VERBAL D'ESSAI - PRÜFPROTOKOLL Page 2 / 2

Snubber data - Caractéristiques du DAB - Stossbremsendaten					
Type		**Mean Load**		**Sn.No.**	
Type	3062.6	Charge nominale	100.0 kN	Sn.No.	31500699/001
Type		Nennlast		Sn.Nr	

Drag Force over displacement - Diagramme de Effort Résistant - Verstellkraft über Weg

Lockup speed - Vitesses de Blocage - Schließgeschwindigkeit
Bypass speed - Vitesses de By-pass - Bypassgeschwindigkeit

Dynamic function - Functione de dynamique - Dynamische Funktion

Remarks: + = Traction/Zug - = Compression/Druck
Conversion: 1 kN = 225 lbs 1 mm/s = 2.36 in/min 1 mm = 0.039 in 20 °C = 68 °F

QF 005 Rev.A

Inspection report with test diagrams page 2

Ⓐ **Quasi-static function tests**

① Drag force [kN]
② Lockup speed [mm/s]
③ Bypass speed [mm/s]

Ⓑ **Dynamic function tests**

④ Load and travel amplitude

Operational performance Snubbers Type 30, 31

Operational performance

On dynamic loading, LISEGA snubbers offer a constant, predictable, functional performance subject to the load spectrum.

Specified function values

LISEGA snubbers comply, as a standard, with the following functional data. The values apply to alternating or dynamic loading.

The specified values correspond to the recognized international specifications and practical requirements. Observation of the values is certified and recorded during factory testing.

By means of design adaptation or use of special oil special parameters can be taken into account.

	type 30		type 31	
	travel range 8, 2, 9 ①	travel range 3 (stroke 300)	travel range 8 (stroke 100)	travel range 9 (stroke 200)
piston rod travel s_b at F_N, R_t ② and 1-35Hz	≤0.236" [≤6mm]	≤0.315" [≤8mm]	≤0.393" [≤10mm]	≤0.472" [≤12mm]
piston rod play s_a (lost motion)	≤0.02" [≤0.5mm] ④ up till load development on change in load direction			
lockup velocity at R_t ②	4.72 – 14.17 inch/min [2-6mm/s]			
bypass velocity at F_N und R_t ②	0.47 – 4.72 inch/min [0.2-2mm/s] ⑤			
maximum resistance against movement (drag force) ③	for F_N ≤ 1800lbs 2.5% of F_N for F_N > 1800lbs largest value of 45lbs or 1%F_N	largest value of 67lbs or 1.5%F_N	1%F_N	

① Travel range 8≙3.94inch [100mm], travel range 2≙5.91inch [150mm], travel range 9≙7.87inch [200mm].

② R_t = room temperature (68°F ±7.2°F [20°C ±4°C]). At ambient temperatures of 302°F [150°C] (short duration, max. 1h) the piston rod travel may be increased by up to 50% due to reduced fluid viscosity.

③ Measured at a constant piston rod speed of approx. 0.71inch/min [0.3mm/s]. Breakaway force is kept at less than 1.5 of given values. F_N = nominal load.

④ If required, s_a can be increased to ≥ 0.02inch [≥ 0.5mm] (KTA 3205.3).

⑤ Bypass velocity < 0.47inch/min [< 0.2mm/s] on request.

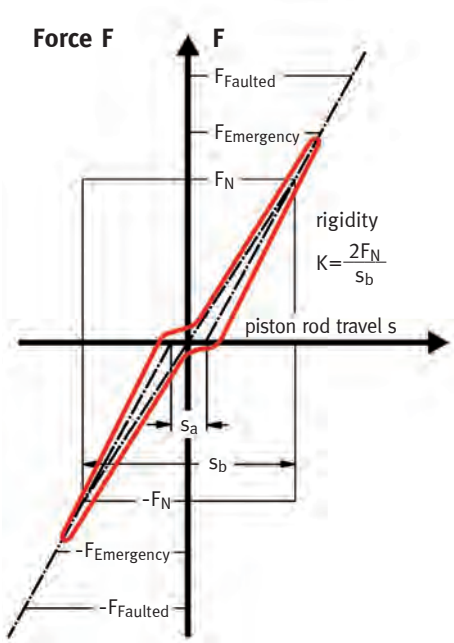

Force – travel diagram

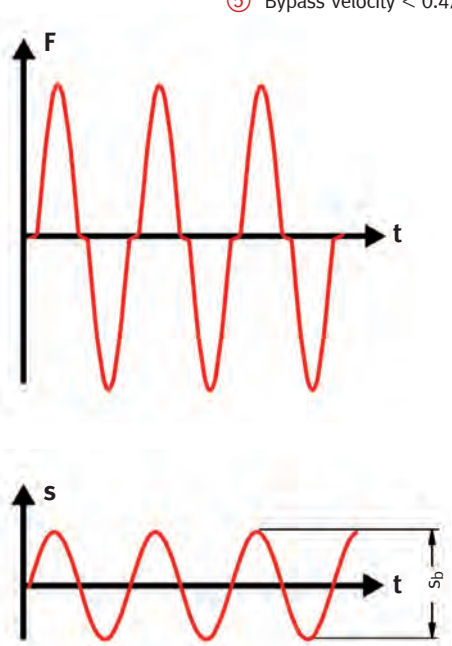

Force and travel amplitudes

562,000lbs [2500kN] test bench at LISEGA

Permissible stress factors Snubbers Type 30, 31

Operational demands

LISEGA hydraulic snubbers are designed as standard for the following operational demands. The specified values are certified by KTA suitability tests.

Other values can be agreed in exceptional cases by design adaptations.

loading due to ambient temperature for inner area	continuous operation	max. 176°F [80°C]
	short-term max. 1h/temp. cycle max. 40h/year	max. 302°F [150°C]
relative air humidity	at 50 – 302°F [10 – 150°C]	100%
wet steam atmosphere	up to max. 302°F [150°C]	X=1
energy dose	cumulative	10^7rad [10^5J/kg =10^5gray]
ambient pressure	continuous operation	7.25 – 14.5 psi [0.5 – 1 bar]
	short-term	72.5 psi [5 bar] excess pressure

Test facilities for snubbers in Zeven plant, Germany

The values apply to the whole snubber, incl. seals and hydraulic fluid. The data for the fluid are:

hydraulic fluid (silicon oil)	setting point	– 58°F [– 50°C]
	flash point	> 572°F [300°C]
	ignition point	≈ 932°F [500°C]

Resistance to fatigue

Proof of operational durability is based on the following accumulated load cycles:

nominal load F_N	load cycle
10%	2,000,000
50%	100,000
80%	20,000
100% (Level A/B)	10,000
133% (Level C)	100
172% (Level D)	10

The load cycle figures correspond to an assumed maximum dynamic load capacity from diverse load events over a period of 40 years. They also comply to the requirements of the test programs of the KTA suitability tests performed. The test results certify that the snubbers endure these loads while maintaining their operational capability.

Due to their specially designed guides, the snubbers are extremely resilient to any continuous operational vibrations. This is proven by confirmed practical experience.

It should be taken into account that the number of possible active parameters, such as frequencies, amplitudes, forms of vibration, effective directions, as well as any possible simultanity, allow no uniform definition of permanent operational vibrations.

Special testing of snubbers type 31. Test load up to 1,930,000lbs [8600kN]

Mode of operation and function
Rigid struts Type 39

In contemporary support concepts, rigid struts play an important role in the safe guiding of pipe systems. The reliable positioning of piping is a crucial factor in the operational safety and long life of the whole system.

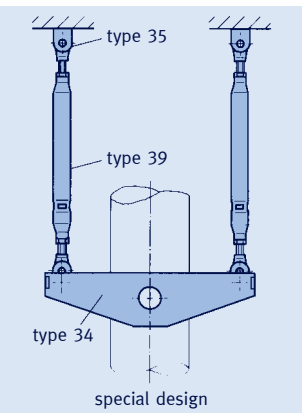

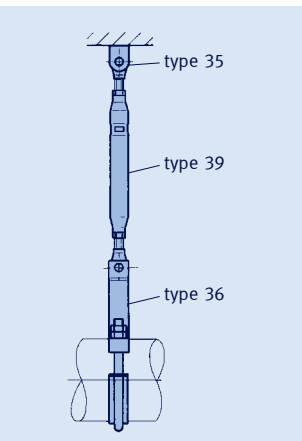

Tasks

The LISEGA rigid struts type 39 provide a range of important functions for the operational safety of pipe systems:

- **Transmission of displacement from unplanned load events (see page 3.1)**
- **Guiding of pipe systems for the control of planned thermal displacement direction**
- **Stabilization of flexible pipe systems by fixed so-called 'zero positions'**
- **Design of axial stops**

Mode of operation

Rigid struts perform as hinged rigid connections between pipe systems and structure. No resistance is offered to slight displacements in the pipe system around the angular displacement of the rigid struts. Movement axially to the rigid strut is not possible.

Design

The rigid strut consists of a rigid body with a ball bushing joint for connection at each end. Attachment to the structure is made via a weld-on bracket type 35 and connection to the piping using dynamic clamps from product group 3. The selection tables for connecting components can be found on page 3.22 or pages 3.29 to 3.43.

Up to load group 8 the body consists of a tube tapered at the ends, depending on alternative manufacturing technologies.

The shape corresponds to the flow of force and permits a favourable power / weight ratio. The connections are ball bushing joints acting as turnbuckles with right- and left-hand threads, permitting length adjustment within a range of 5.91inch [150mm] or 11.81inch [300mm]. Flat faces on the body of the tube allow the safe use of a wrench and so facilitate length adjustments in the installed condition.

The ball bushing joints are provided with fine threading to guarantee secure locking.

The bodies are produced in standard lengths and are available from stock. LISEGA rigid struts are suitability-tested according to KTA 3205.3 and designed in accordance with the ASME-BPV Code.

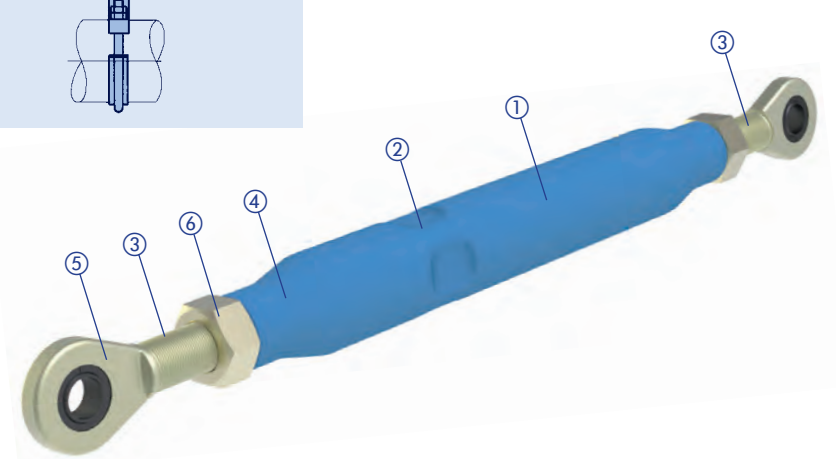

① surface with standard paint coating.
② flat face for easy adjustment.
③ length-adjustable with right-hand / left-hand threads.
④ body, free of welding up to load group 8.
⑤ electro galvanized ball bushing joints with fine thread.
⑥ safe locking of ball bushing joints by means of fine threads and electro galvanized lock nuts.

Mode of operation and function
Energy absorber Type 32

Mode of operation and function

The energy absorber functions by means of an adjustable free stroke to absorb thermal displacement. The adjustment of the free stroke can be carried out (for medium sizes) within a range of ±0.98inch [±25mm]. In this range the pipe system can move freely without resistance.

Dynamic events, however, are limited in their movement by the use of stops. The forces arising are thereby led into the building structure up to the specified nominal load and, above that, transformed into deformation energy. Connected components are in this way protected in a controlled manner from overloading.

For this reason energy absorbers are ideal as protection:

- **against water hammer**
- **as a substitute for complex framework constructions**
- **as whip restraints**

If such an event has occurred, the forward thrust of the disk affected can be read from the position of the indicator bar (G).

For further use of the energy absorber the free stroke on the adjustment device (H) only needs to be re-regulated for the new position. **Corresponding procedures can be repeated up to maximum deformation travel (s).** Further information is available on page 3.23.

Installation

The energy absorbers are designed in accordance with the load group in product group 3 (dynamic components) and are correspondingly compatible in respect of loads and connections with the connection components in this product group. Please also note the instructions on page 3.1.

Energy absorbers restrict dynamic deflections and transform forces above the nominal load into deformation energy. The steelwork is thus protected.

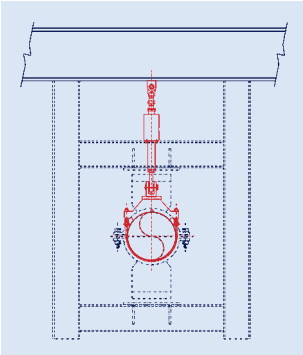

Energy absorber, used instead of a double guide. In this way the framework can be avoided.

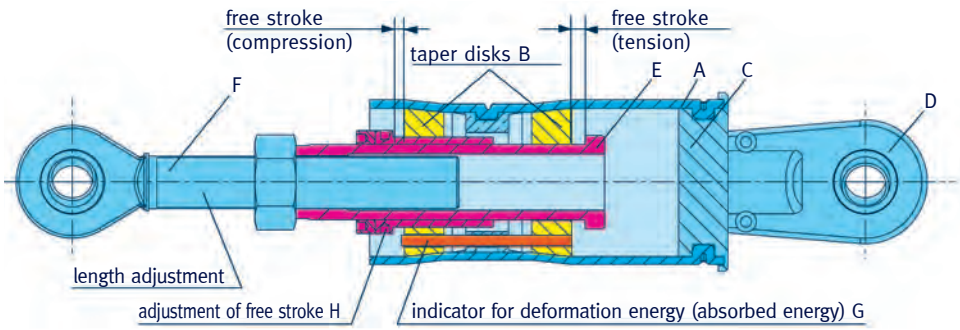

The design consists of an austenitic tubular casing (A) with defined size, into which taper disks (B) with defined force have been pressed. The tube is sealed with a fixed base (C) fitted with a connecting lug (D). The force transmission over the whole unit is made via the stops (E) and the push rod (F).

If a dynamic event exceeds the compression force of the taper disks, the taper disk affected is driven forward and widens the cover tube. In this way the excess force is diverted from the connection components by transformation into deformation energy.

Function certification

LISEGA energy absorbers have gone through an exhaustive test program to prove their functional reliability. In numerous dynamic and static stress tests, as well as load capacity tests, their safety has been clearly demonstrated.

Energy absorbers are maintenance-free during operation and require no in-service testing.

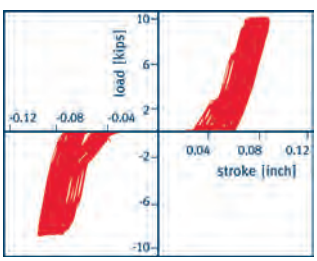

Measured force/travel path with oscillating loads > nominal load

Mode of operation and function Viscoelastic damper Type 3D

Dynamic loads from mechanical, hydrodynamic or external events can severely damage pipe systems and other plant components. Viscoelastic dampers can considerably reduce such vibrations.

Vibrations occur through inner events from mechanical or hydrodynamic processes, or in the case of external events such as wind loads, traffic vibrations or earthquakes.

Impermissibly high vibrations can thereby cause serious damage to pipe systems. By means of special components they must be protected. To avoid stresses in the whole system, displacements from thermal expansion in the piping system may only be minimally obstructed.

Viscoelastic dampers have proved in practice to offer reliable protection for pipe systems and installations. In particular, vibrations caused by sudden peak loads can be reduced to an acceptable level by such dampers.

The LISEGA viscoelastic damper consists of a casing filled with viscous fluid that allows relative displacement between the connecting plates and at the same time dampens in all directions, dissipating the kinetic energy (transformed into heat).

Viscoelastic dampers transmit only dynamic loads, not static ones. The reaction force of the damper is thereby proportional to the velocity and frequency of the vibrations. LISEGA offers fluids with varying damping characteristics in relation to application temperature and frequency.

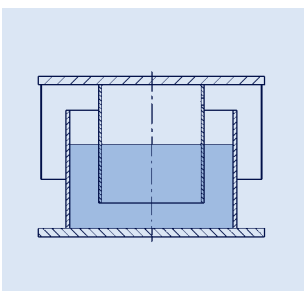

Construction of the LISEGA viscoelastic damper

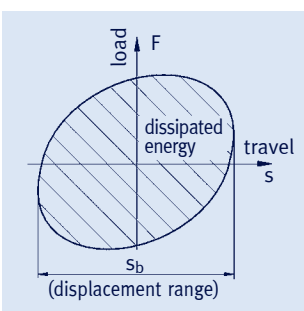

Hysteresis of a viscoelastic damper

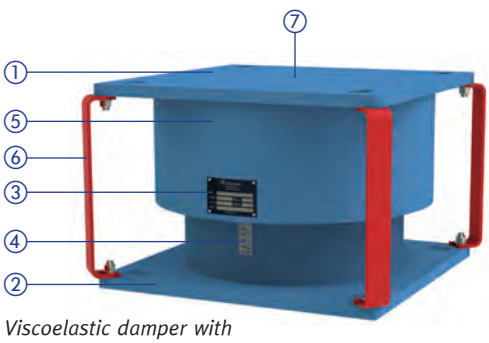

Viscoelastic damper with transport brackets without offset

Viscoelastic damper with adjusted offset

①② connecting plates
③ name plate
④ position indicator
⑤ maintenance-free dust cover
⑥ transport brackets
⑦ inner connection thread M16 for transport purposes

- ✓ load range 562lbs to 22,450 lbs [2.5kN to 100kN]
- ✓ frequency range up to 35Hz
- ✓ temperature range from 14°F to 176°F [– 10°C to 80°C]
- ✓ travel range up to 1.97inch [50mm]

Pipe whip restraints Type 3R

Pipe whip restraints

Special designs in the field of dynamic pipe supports are pipe whip restraints. Beside energy absorber type 32, a design type with round-steel U-bolts has proved widely successful, especially for large loads.

Pipe whip restraints are common in nuclear installations and are designed to instantaneously absorb the kinetic energy of bursting pipe systems in faulted conditions. For this, the elongation behavior of the surrounding steel U-bolts is utilized; these are designed to cope with the dynamic forces to be expected.

Pipe whip restraints are designed according to the customer's design parameters and manufactured by LISEGA as special components.

Pipe whip restraints are important as safety elements and are therefore subject to stringent quality requirements with regard to design and manufacture. As the result of countless deliveries to modern nuclear installations LISEGA has clearly proved its qualification for the supply of these components.

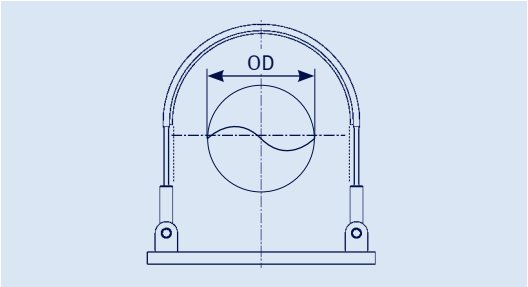

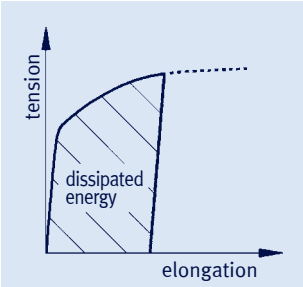

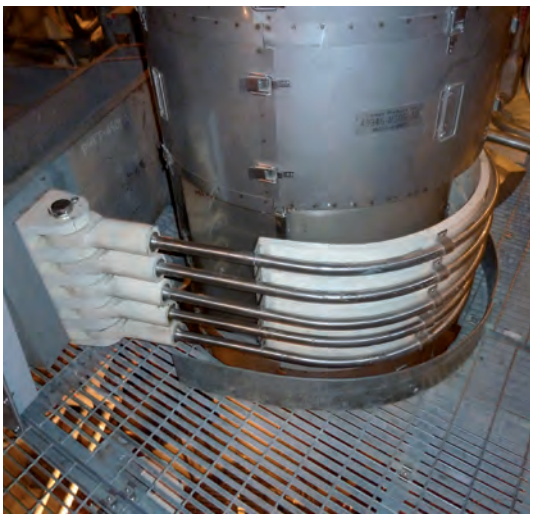

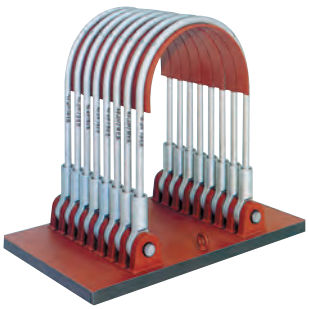

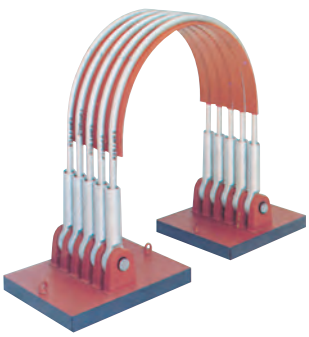

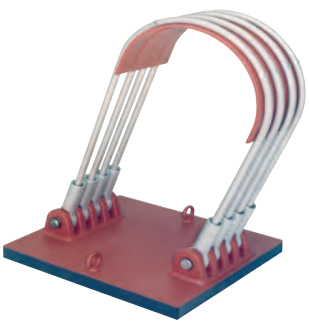

Mode of operation and function
Dynamic clamps Type 34, 36, 37

For the dynamic supports the pipe clamp design must also be carefully considered. Despite properly functioning main components (rigid struts, snubbers, energy absorbers) the functioning of the whole system can be seriously affected by faulty pipe clamps.

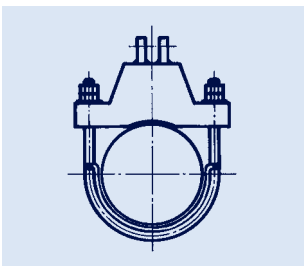

Friction-fit clamp (static)

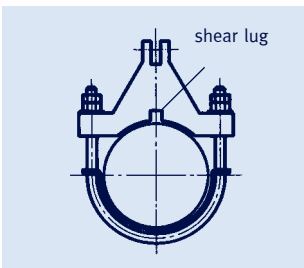

Form-fit clamp (dynamic)

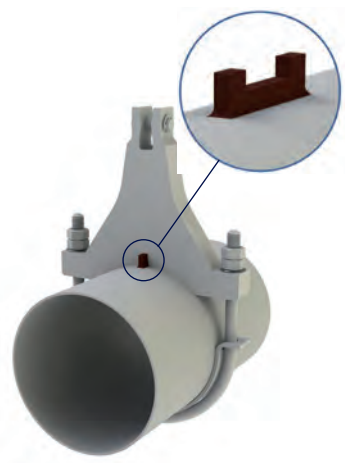

Type 36 with shear lug type 3L

Function

In the high temperature range and/or over a longer period of time, friction fit clamps cannot safely transmit dynamic loads, even with bolt pre-stressing, due to the creep strength behavior of the materials (long-term fatigue). Even over-sized bolts, which might under certain circumstances severely constrict the piping ('pipe squeezers'), are not solving the problem.

- **A typical fault is a clamp design that is too 'soft', so that the necessary stiffness rule is not achieved**
- **Attention must also be paid to connections to clamps free of play**
- **To prevent constraints, sufficient space must be ensured for lateral displacement in the event of pipe system movements**

To transmit dynamic loads, clamps are required that absorb dynamic forces and transmit them further. Dynamic forces are created by alternating loads; displacement can thereby result due to eccentrically applied forces. The dynamic clamp should therefore be form-fitted (shear lugs) to prevent contortion. In this way, defined, verifiable conditions are produced. Certification is the responsibility of the pipe system designer.

The shear lugs keep the dynamic clamps in the expected force direction and are practically unstressed. Lateral forces would not occur under dynamic load cases because friction forces between the pipe and the clamp insure the firm positioning.

Due to the minimal forces to be absorbed the weld seam stresses can be minimalized, despite the small shear lug sizes. As a rule they lie under 35% of the yield stress (creep strength) limit for load case H (level A/B), in accordance with the permissible ASME or DIN values. From a table the LISEGA shear lugs can be selected on page. 3.44.

Dynamic clamps type 36, 37

To achieve the optimum solution in each case and at the same time the most favorable performance/weight ratios, LISEGA offers 4 standard designs.

The selection tables are classified according to pipe diameters. The type designation for the relevant clamp is found by way of the temperature ranges and permissible loads. After that the installation dimensions must be checked against the scale drawings. Special attention must be paid to the lug connections on the rigid struts, snubbers or energy absorbers. If the standard pin connection d1 is not suitable, a different weld-on bracket type 35 can be supplied. The 'E' dimension of the clamp is changed according to the table below.

If the customer order does not show a particular modification of the layout, the bracket connection is fitted so that the main angulation range runs along the pipe axis.

Type 36 .. .1/2/3

Type 37 .. .1/2/3/4/5/6

Type 36 .. .4/5

Type 37 .. .7/8/9

theor. load group	max. load group of dynamic clamps							
	1, 2	**3**	**4**	**5**	**6**	**7**	**8**	**9**
	'E' dimension reduction about ΔE							
1, 2	0	0.16	0.39	0.79	1.77	2.36	3.35	4.92
3		0	0.24	0.63	1.61	2.20	3.19	4.76
4			0	0.39	1.38	1.97	2.95	4.53
5				0	0.98	1.57	2.56	4.13
6					0	0.59	1.57	3.15
7						0	0.98	2.56
8							0	1.57
9								0

Reduction of the E_{max} dimension for dynamic clamps type 36 and 37 on selection of a smaller connection than given in the column 'max. load group' in the selection tables.

For the support of austenitic pipe systems, the pipe clamps can be fitted with stainless steel inlay plates. These plates must be ordered separately, see page 4.7.

Dynamic clamps as statically stressed clamps

The specified permissible loads (in the selection tables on pages 3.29 to 3.43) are designed for dynamic operation with snubbers or rigid struts according to the load spectrum on page 3.10.

The dynamic clamps can also be exposed to **permanent static stress**. For this, the specified permissible stresses are reduced according to the following table:

design temperature	permissible permanent tension stress
up to 660°F [350°C]	100%
661°F–840°F [351°C–450°C]	100%
841°F–930°F [451°C–500°C]	80%
931°F–950°F [501°C–510°C]	80%
951°F–985°F [511°C–530°C]	65%
986°F–1040°F [531°C–560°C]	55%
1041°F–1075°F [561°C–580°C]	65%
1076°F–1110°F [581°C–600°C]	60%

These specifications relate to the creep strength dependent on time in the 200,000h range at temperature ≥ 840°F [≥ 450°C].

Special designs

In some cases special designs are advisable in addition to the dynamic clamps type 36 and 37. In particular, for parallel and angulating arrangements, standardized design and calculation methods have been proved successful.

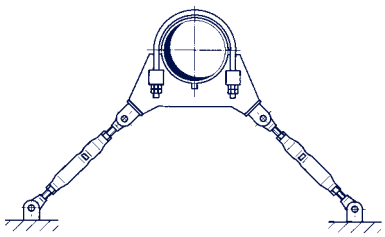

Special clamp for angulating arrangement

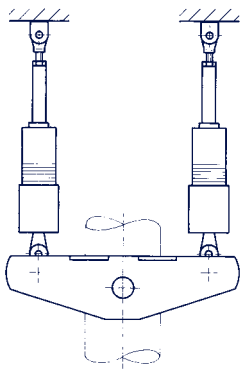

Dynamic pipe clamp type 34 with snubbers and twist restraints

Special design type 37 with pin of weld-on bracket in pipe axis direction

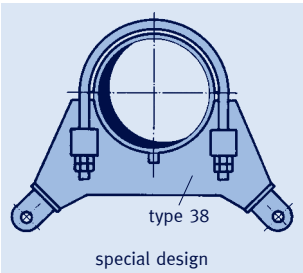

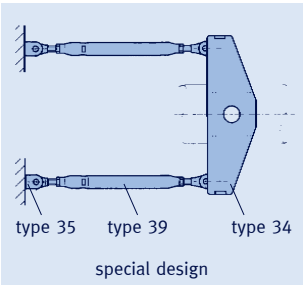

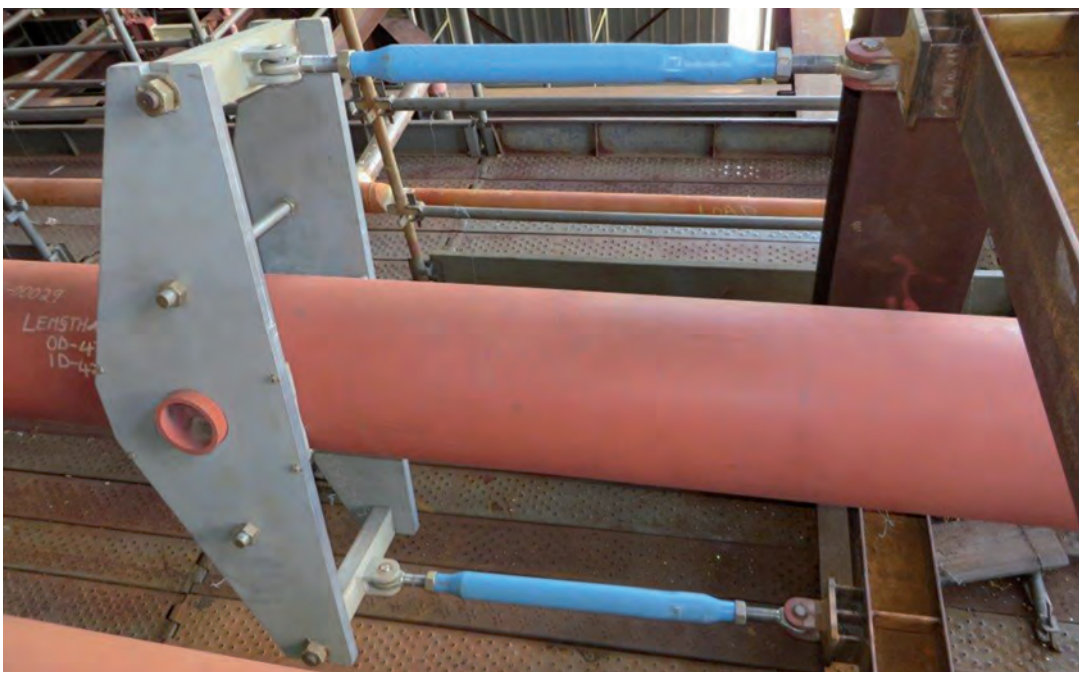

Horizontal axial stop with rigid strut type 39 and pipe clamp type 34 incl. spacer

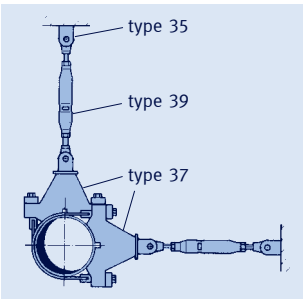

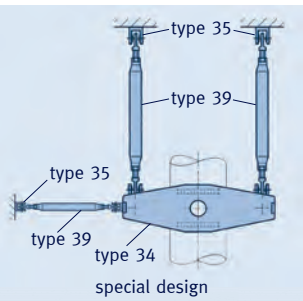

Dynamic clamps Type 34

Dynamic stresses frequently arise in the direction of the pipe axis (e.g. from shock impacts or other forms of excitation). To absorb these loads the special dynamic clamp type 34 was developed.

In vertically and horizontally running pipe systems, special clamps are being increasingly used for the defined determination of the pipe system positioning and also for the absorption of dynamic stresses in the direction of the pipe axis. The loads thereby occurring must be distributed via a form-fitting connection to the piping (trunnions). For this purpose LISEGA has developed the dynamic clamp type 34.

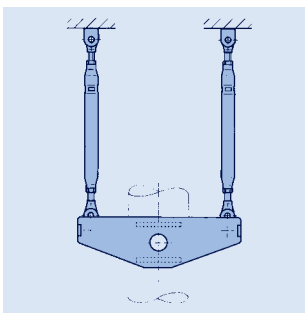

Type 34 as axial stop with spacer

Type 34

The basis of this design was the long time successful box-frame clamp type 46/48. The load distribution in dynamic clamp type 34 is effected by the use of reinforced cross-beams with weld-on brackets type 35 for connection to the dynamic main products type 30, 32, 39.

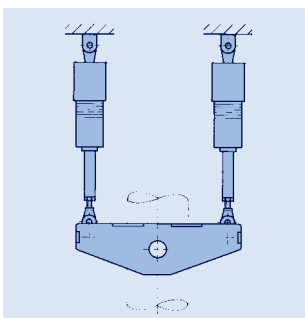

Type 34 with snubbers type 30 and twist restraints

Design

For the design of the dynamic clamps type 34 the following parameters are required:

- **load (dynamic, static)**
- **pipe system temperature**
- **insulation thickness**
- **span width of the connections**
- **connection size and alignment of weld-on brackets type 35**
- **trunnion sizes**
- **trunnion tolerances**
- **position (horizontal/vertical)**
- **main components connected (type 30, 39, 32)**
- **twist restraint/recess dimensions if required**
- **spacer if required**

Due to the wide range of possible combinations and design parameters, dynamic clamps type 34 are designed individually on request.

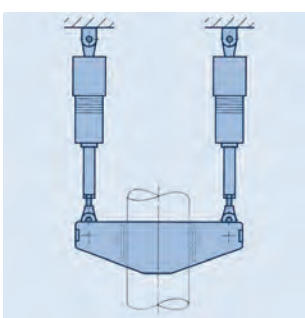

Type 34 with rotated trunnion hole and snubber type 30

Type 34 with snubbers and position-securing devices

Securing positions

Position securing measures ensure that the clamp cannot angle around the pipe (with the trunnion as pivot). The position-securing device is not dynamically stressed. It is either a recess in the trunnion socket-hole or additional plates.

Type 34 with recesses

Type 34 with additional plates

Horizontal axial stop with rigid struts type 39 and pipe clamp type 34

Pipe system secured with snubber type 30 on dynamic clamps type 36

Snubbers Type 30

Snubbers
type 30 18 16 to 30 03 12
Serial standard design.
Delivery from stock.

Only corrosion-resistant materials are used.

The connecting lugs attached by a connection thread (material = carbon steel) are electro galvanized.

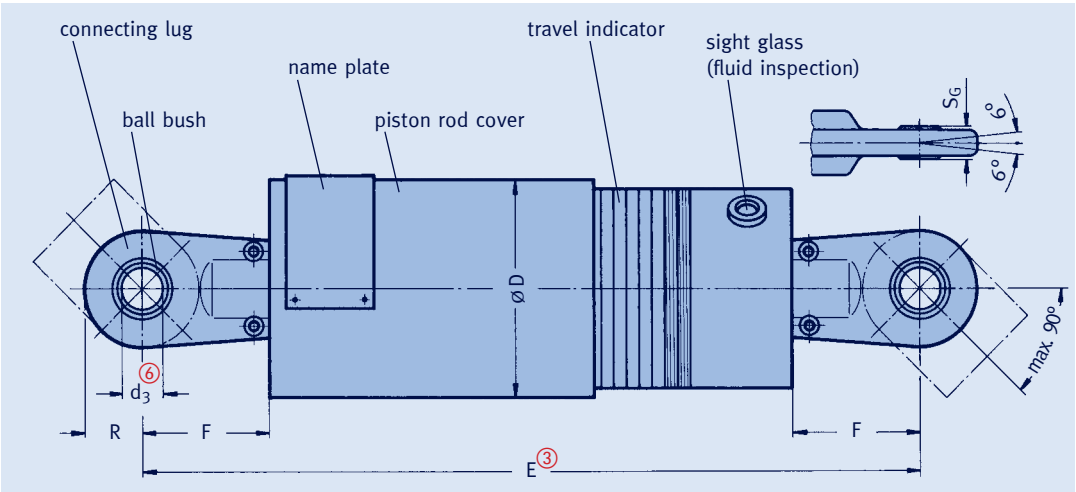

type	nom. load [lbs]①	emergency Level C②	stroke ⑤	ø D	ø d_3 ⑥	E③ min	E③ max	F④	R	S_G	weight [lbs]
30 18 16	675	900	3.94	2.13	0.39	8.66	12.60	0.71	0.59	0.36	4
30 38 16	1800	2380	3.94	2.76	0.47	12.40	16.34	1.97	0.79	0.40	10
30 39 16	1800	2380	7.87	2.76	0.47	16.14	24.02	1.97	0.79	0.40	13
30 42 16	4000	5380	5.91	3.35	0.59	15.55	21.46	2.28	0.89	0.48	18
30 43 16	4000	5380	11.81	3.35	0.59	21.46	33.27	2.28	0.89	0.48	26
30 52 13	10350	13700	5.91	5.31	0.79	17.52	23.43	2.56	1.18	0.63	44
30 53 13	10350	13700	11.81	5.31	0.79	23.43	35.24	2.56	1.18	0.63	64
30 62 16	22450	31700	5.91	6.69	1.18	21.06	26.97	3.94	1.77	0.87	82
30 63 16	22450	31700	11.81	6.69	1.18	26.97	38.78	3.94	1.77	0.87	112
30 72 16	44900	60000	5.91	7.87	1.97	24.21	30.12	5.12	2.36	1.38	135
30 73 16	44900	60000	11.81	7.87	1.97	30.12	41.93	5.12	2.36	1.38	175
30 82 16	78600	106000	5.91	10.63	2.36	28.74	34.65	6.50	2.95	1.74	270
30 83 16	78600	106000	11.81	10.63	2.36	34.65	46.46	6.50	2.95	1.74	325
30 92 13	123500	165000	5.91	11.81	2.76	29.92	35.83	6.50	4.13	1.93	385
30 93 13	123500	165000	11.81	11.81	2.76	35.83	47.64	6.50	4.13	1.93	460
30 02 12	224000	300000	5.91	15.35	3.94	36.81	42.72	9.45	5.79	2.76	860
30 03 12	224000	300000	11.81	15.35	3.94	42.72	54.53	9.45	5.79	2.76	1015

① See technical specifications, table: 'permissible loads' (page 0.6) and 'welding of weld-on brackets' (page 3.22).

② Usual design load for earthquakes and similar load cases. See also technical specifications on page 0.6.

③ E_{min} = piston rod retracted
E_{max} = piston rod extended
To bridge greater installation lengths, installation extensions type 33 (page 3.21) can be used.

④ On replacement of other makes, the connection dimensions such as pin diameters and lug lengths can be adapted to the connection designs already existing in the plant.

⑤ If required, snubbers with longer strokes can be supplied.

⑥ Connection possibilities: see pin diameters of weld-on bracket type 35 or dynamic clamps in product group 3.

Order details:
snubber type 30 .. ..
with 2 weld-on brackets
type 35 .. ..
marking: ...

Snubbers Type 31

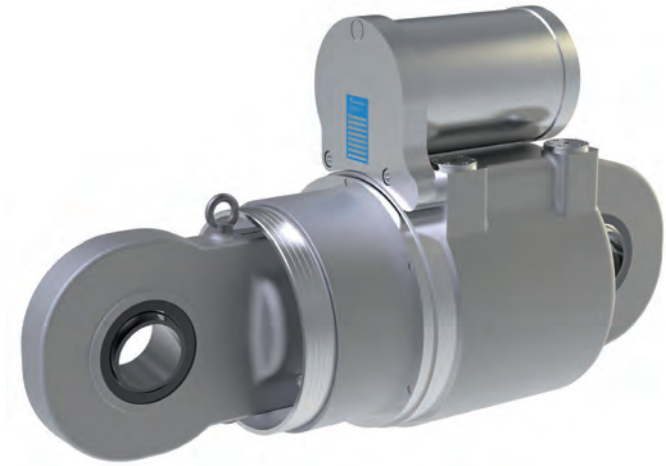

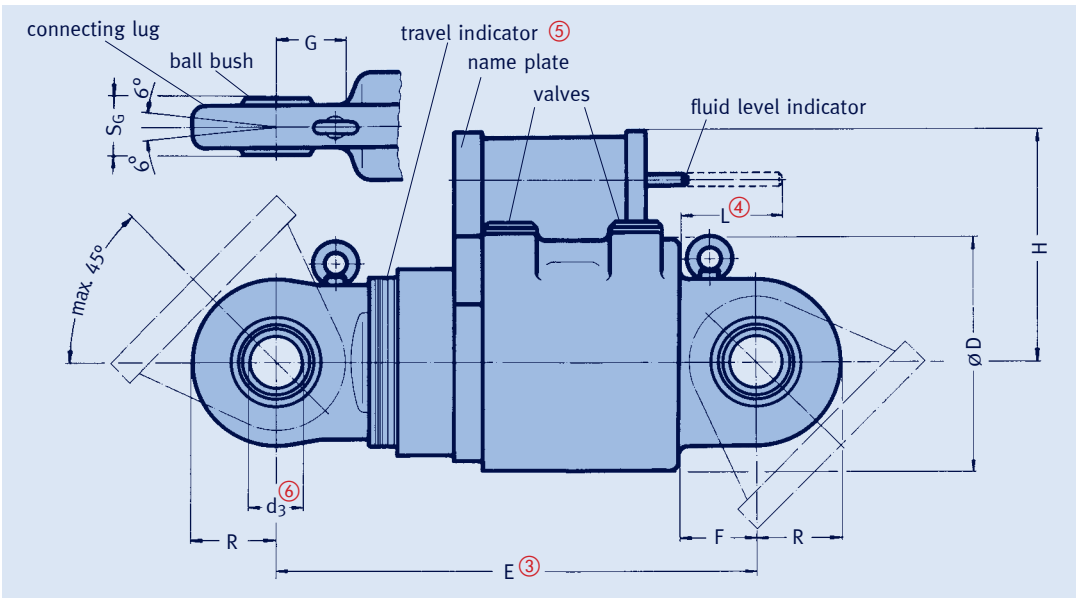

Snubbers type 31 98 16 to 31 58 16

Snubbers type 31 are specially conceived for the absorption of particularly heavy loads. They are mainly used in nuclear power stations to protect steam generators and large pumps. Due to the normally very restricted installation space they are typically custom-built for the given conditions. The table on this page therefore serves as general orientation for initial planning.

The body and connecting lugs are made of high-tensile stainless steel castings.

type	nom. load [lbs]①	emergency Level C②	stroke ⑤	ø D	ø d_3 ⑥	E③ min	E③ max	F	G	H	L_{max} ④	R	S_G	weight [lbs]
31 98 16	123500	165000	3.94	9.45	2.76	24.41	28.35	3.74	3.54	12.20	4.53	4.13	1.93	335
31 99 16	123500	165000	7.87	9.45	2.76	28.94	36.81	3.74	3.54	12.20	5.71	4.13	1.93	400
31 08 16	224000	300000	3.94	12.99	3.94	30.12	34.06	4.72	4.33	15.16	5.71	5.51	2.76	630
31 09 16	224000	300000	7.87	12.99	3.94	34.65	42.52	4.72	4.33	15.16	7.87	5.51	2.76	745
31 28 16	448000	597000	3.94	17.32	4.72	34.25	38.19	6.30	6.10	17.72	5.91	6.30	3.35	1430
31 38 16	670000	898000	3.94	21.26	5.51	40.16	44.09	7.48	7.09	24.41	3.94	7.87	3.55	2135
31 48 16	900000	1195000	3.94	22.83	6.30	41.34	45.28	8.07	7.87	23.03	10.04	9.65	4.14	2870
31 58 16	1124000	1495000	3.94	24.80	7.09	44.88	48.82	9.06	8.66	26.38	8.07	11.42	4.14	3860

Order details:
snubber type 31 .. ..
with 2 weld-on brackets type 35 .. ..
marking: ...

① See technical specifications, table: 'permissible loads' (page 0.6) and 'welding of weld-on brackets' (page 3.22).

② Usual design load for earthquakes and similar load cases. See also technical specifications on page 0.6.

③ E_{min} = piston rod retracted
E_{max} = piston rod extended.

④ L_{max} at 176°F [80°C].

⑤ Design of travel indicator for travel range 8 (3.97inch [100mm] stroke).

⑥ Connection possibilities: see pin diameters of weld-on brackets type 35 or dynamic clamps in product group 3.

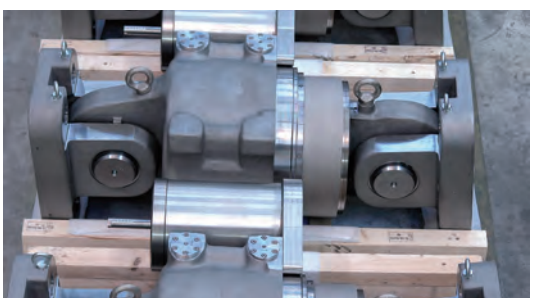

Snubber type 31 in special configuration

LISEGA snubbers type 31 are fitted with exchangeable valves for in-service tests on site.

Installation extensions Type 33

Installation extensions type 33 18 18 to 33 03 12
Serial standard design.

Type 33 installation extensions are used if greater installation lengths are required.

Connection to the snubber or energy absorber is made at the cylinder base. By means of serially-produced screw connections the change over easily be made from standard connecting lugs to installation extensions. This also applies to special connections, which are particularly useful when exchanging other makes, as in this way the connections on site can still be used. Further connection possibilities can be found on page 3.6.
An exceeding of the maximum lateral displacement of ±6° is to avoid.

Material:
Extension tube and countering ring carbon steel

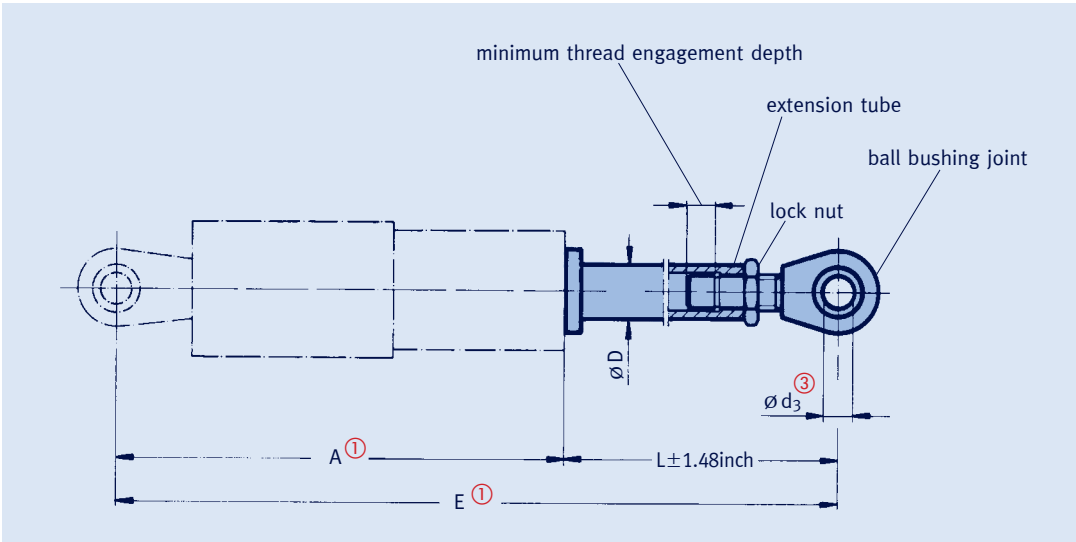

type	nom. load [lbs]	snubber stroke	A ①	ø d_3 ③	D max	E ①② min	E ①② max	L±1.48 ② min	L±1.48 ② max	weight [lbs] L_{min}	+per inch
33 18 18	675	3.94	9.45	0.393	0.98	17.52	29.92	8.07	20.47	1.76	0.22
33 38 18	1800	3.94	12.40	0.472	1.18	20.28	29.92	7.87	17.52	2.21	0.31
33 39 18	1800	7.87	18.11	0.472	1.18	25.98	27.17	7.87	9.06	2.21	0.31
33 42 18	4000	5.91	16.22	0.590	1.38	24.29	46.26	8.07	30.04	3.53	0.42
33 43 18	4000	11.81	25.00	0.590	1.38	33.07	36.61	8.07	11.61	3.53	0.42
33 52 13	10350	5.91	17.91	0.787	1.93	28.35	55.31	10.43	37.40	8.16	0.41
33 53 13	10350	11.81	26.77	0.787	1.93	37.20	46.46	10.43	19.69	8.16	0.41
33 62 18	22450	5.91	20.08	1.181	2.52	30.71	74.80	10.63	54.72	13.23	1.12
33 63 18	22450	11.81	28.94	1.181	2.52	39.57	66.93	10.63	37.99	13.23	1.12
33 72 18	44900	5.91	22.05	1.968	3.27	34.45	95.08	12.40	73.03	26.46	1.79
33 73 18	44900	11.81	30.91	1.968	3.27	43.31	80.31	12.40	49.41	26.46	1.79
33 82 18	78600	5.91	25.20	2.362	4.02	40.55	94.49	15.35	69.29	49.62	2.66
33 83 18	78600	11.81	34.06	2.362	4.02	49.41	91.34	15.35	57.28	49.62	2.66
33 92 13	123500	5.91	26.38	2.755	4.53	45.47	65.75	19.09	39.37	90.42	3.08
33 92 13	123500	5.91	26.38	2.755	5.00	65.79	112.99	39.41	86.61	98.14	4.03
33 93 13	123500	11.81	35.24	2.755	4.53	54.33	66.73	19.09	31.50	90.42	3.08
33 93 13	123500	11.81	35.24	2.755	5.00	66.77	110.04	31.54	74.80	98.14	4.03
33 02 12	224000	5.91	30.31	3.937	6.30	55.71	90.55	25.39	60.24	92.00	5.32
33 03 12	224000	11.81	39.17	3.937	6.30	64.57	91.54	25.39	52.36	92.00	5.32

① For middle piston position.

② Installation dimensions larger than 'E' max. possible on load reduction. Smaller 'L' dimensions can also be supplied without adjustment possibility.

③ Connection possibilities: see pin diameters of weld-on brackets type 35 or dynamic clamps in product group 3.

Order details:
installation extension
type 33 .. ..
L = ...inch for
hydr. snubber
or energy absorber

Weld-on brackets Type 35

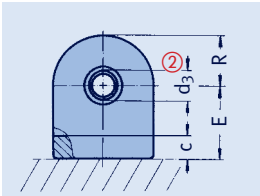

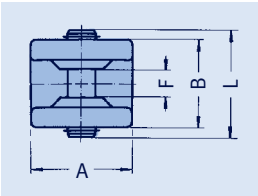

Weld-on brackets type 35 19 13 to 35 20 19
Serial standard design.

This component is designed for connection of snubbers type 30 and 31, energy absorbers type 32 and for rigid struts type 39, 16, 20 and 27 and provides for attachment to the structure.

The brackets are made of the easily weldable carbon steel and the precision-fit stainless steel connecting pins.

Order details:
weld-on bracket
type 35 .. ..

type	nom. load [lbs]①	A	B	C	ø $d_3$②	E	F	L	R	weight [lbs]
35 19 13	675	0.98	1.26	0.47	0.393	1.18	0.37	1.65	0.51	0.4
35 29 13	900	0.98	1.26	0.47	0.393	1.18	0.37	1.65	0.51	0.4
35 39 13	1800	1.18	1.46	0.47	0.472	1.34	0.41	1.81	0.59	0.7
35 49 13	4000	1.38	1.69	0.51	0.590	1.57	0.49	2.05	0.71	1
35 59 19	10350	2.13	2.13	0.59	0.787	1.97	0.65	2.56	1.06	2
35 69 19	22450	3.54	3.11	0.91	1.181	2.95	0.89	3.74	1.77	8
35 79 19	44900	4.33	3.94	0.98	1.968	3.54	1.40	4.53	2.17	17
35 89 19	78600	5.91	5.12	1.34	2.362	4.53	1.77	6.30	2.95	37
35 99 11	123500	7.09	9.06	1.57	2.755	6.10	1.97	8.66	3.15	90
35 09 13	224000	15.35	12.20	2.28	3.937	8.35	2.83	12.01	3.94	291
35 20 19	448000	20.47	12.60	2.56	4.724	9.65	3.43	12.60	5.31	474

① See technical specifications, table 'permissible loads' (page 0.6) and 'welding of weld-on brackets' (as shown below).

② Pin diameter

- **If required, weld-on / bolt-on brackets in larger sizes are suppliable**

type	a* α=15° β= 6°	a* α=30° β= 6°	a* α=45° β= 6°
35 19 13	3/16	3/16	3/16
35 29 13	3/16	3/16	3/16
35 39 13	3/16	3/16	3/16
35 49 13	3/16	1/4	9/32
35 59 19	5/16	13/32	15/32
35 69 19	7/16	17/32	5/8
35 79 19	19/32	25/32	7/8
35 89 19	13/16	1 1/32	1 3/16
35 99 11	27/32	1 1/8	1 9/32
35 09 13	25/32	31/32	1 1/16
35 20 19	1 9/32	–	–

* Leg length

Weld-on brackets should always be arranged so that the max. angulation results in the direction of the greatest thermal expansion during operation ($\sphericalangle\alpha$). The lateral deflection is restricted to $\pm 6°$ ($\sphericalangle\beta$). Misalignment of the weld-on brackets should be avoided due to the restricted possibility of movement caused.

The minimum weld seam thickness 'a' for weld-on brackets type 35 is dependent on the angulations α and β. In the calculations a permissible stress of 13.05 ksi [90N/mm²] in load case H (level A/B) was assumed.

On increasing the angulation α to 90°, the permissible loads are reduced by approx. 15% on constant weld seam thickness (a at α = 45°).

The basis for the permissible loads is provided by the relevant load table (**'technical specifications'**, page 0.6).

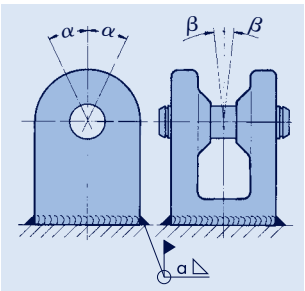

Max. angulation type 35

Energy absorber Type 32

Energy absorber
type 32 18 16 to 32 92 16
Serial standard design.

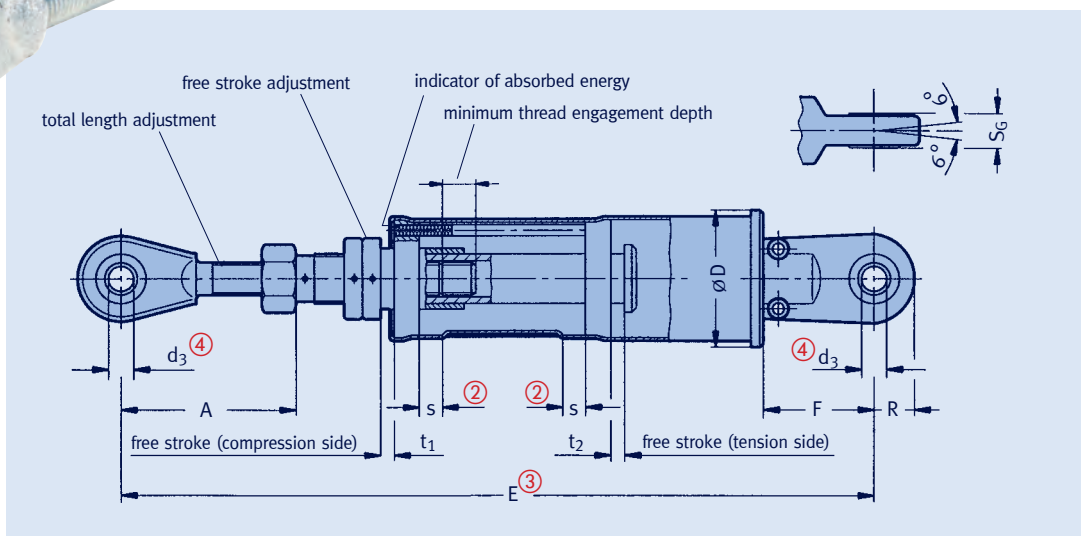

① If the nominal load is exceeded, the increasing force and displacement are transformed into deformation energy.

② Max. deformation travel in compression and tension directions.

③ 'E' dimensions on middle position of the free strokes t_1/t_2 and length adjustment 'A' dimension. If t_2 changes, the 'E' dimension is correspondingly reduced or increased.

④ Connection possibilities: see pin diameters of weld-on brackets Type 35 or dynamic clamps in Product Group 3.

type	nom. load [lbs]①	s②	t_1	t_2	ø D	ø d_3 ④	E③	A	F	R	S_G	weight [lbs]
32 18 16	675	0.20	0 to 0.79	0 to 0.79	2.20	0.393	11.81	3.35 ± 1.97	0.71	0.59	0.36	1.8
32 38 16	1800	0.20	0 to 0.87	0 to 0.87	2.36	0.472	13.98	3.74 ± 1.97	1.97	0.79	0.40	4.0
32 42 16	4000	0.20	0 to 0.98	0 to 0.98	3.15	0.590	17.32	4.92 ± 2.95	2.28	0.89	0.48	8.0
32 52 16	10350	0.20	0 to 0.98	0 to 0.98	4.53	0.787	19.29	5.91 ± 2.95	2.56	1.18	0.63	25.4
32 62 16	22450	0.26	0 to 0.98	0 to 0.98	5.12	1.181	22.64	6.50 ± 2.95	3.94	1.77	0.87	41.0
32 72 16	44900	0.37	0 to 1.10	0 to 1.10	7.68	1.968	28.15	6.89 ± 2.95	5.12	2.36	1.38	104.0
32 82 16	78600	0.49	0 to 1.18	0 to 1.18	9.84	2.361	37.20	8.86 ± 2.95	6.50	2.95	1.74	231.0
32 92 16	123500	on request										

Individual application

The standard designs shown in the table above represents only part of the suppliable range. The products can be adapted by LISEGA to the particular requirements of the user.

This applies especially to those cases where loads and strokes exceed standard parameters.

Order details:
energy absorber
type 32 .. 16
t_1 = ...inch, t_2 = ...inch
marking: ...

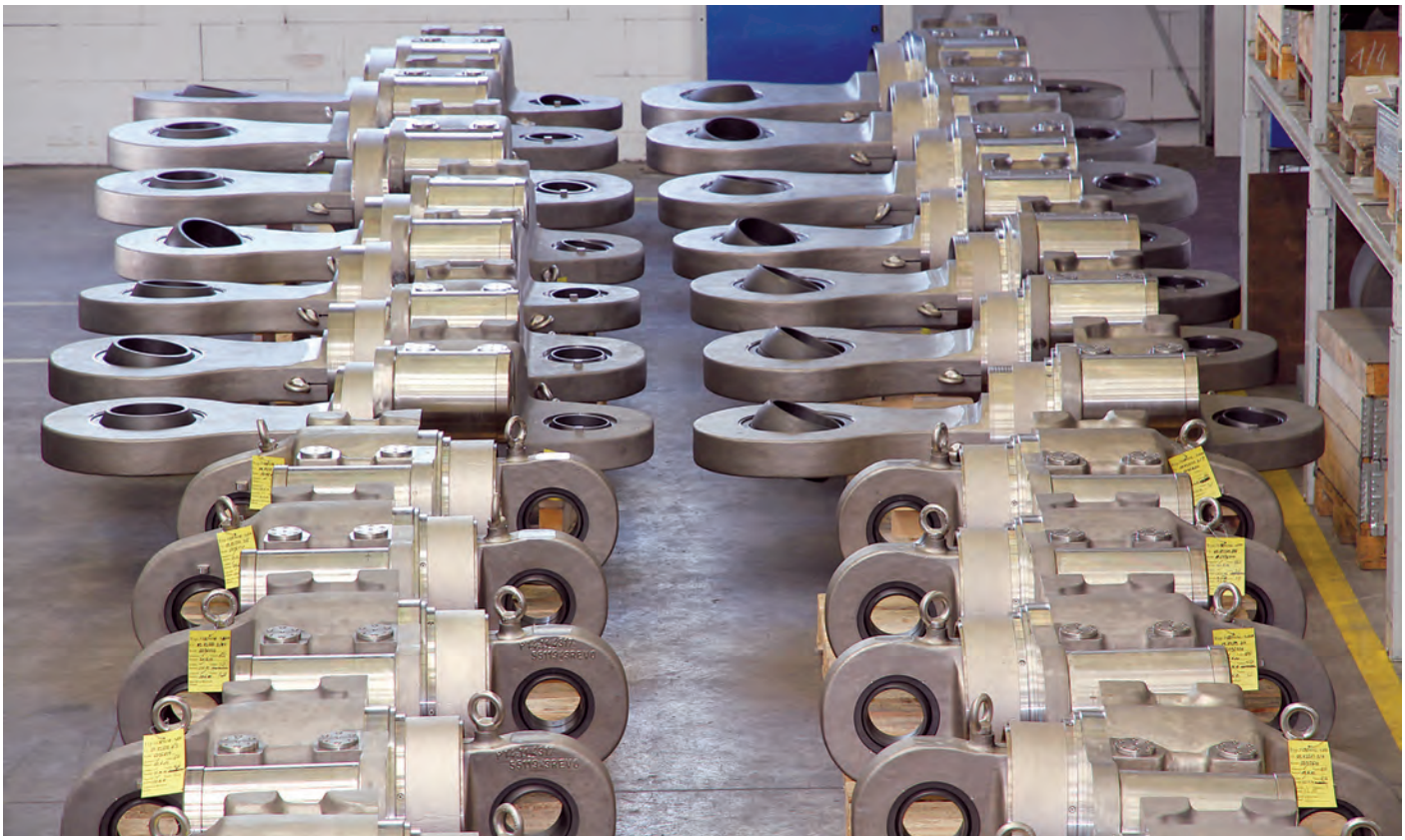

Snubbers type 31 prior to delivery

Type 31

Commissioning of type 30

Viscoelastic damper Type 3D .. 44-D

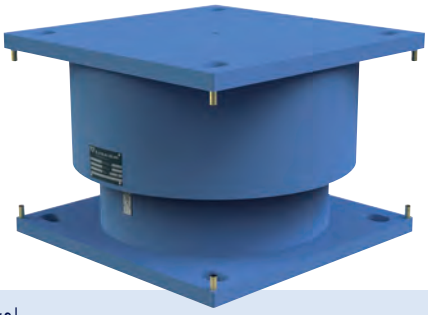

Viscoelastic damper type 3D 03 44-D to 3D H1 44-D

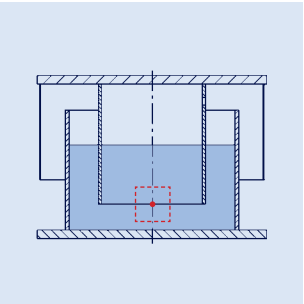

= working range round the mid-position

Selection and dimensions

When selecting viscoelastic dampers attention should be paid to the **temperature existing on site**. These dampers are available for application temperatures ranging from 68°F to 176°F [20°C to 80°C], whereby the various damping media cover a temperature range of 50°F [10°C] in each case. **For this reason the correct selection of application temperature is important.**

The choice of damper size depends on the nominal load. The offset in horizontal and vertical directions must be considered for the cold load position. For LISEGA dampers in the 44-D series this amounts in each case to ±1.57inch [±40mm] in horizontal/ vertical directions.

The operation of the dampers should be in the center position. In order to achieve the necessary damping resistance, the viscous dampers should not exceed a tolerance of ±0.79inch [±20mm] from the center position in any operating condition. Before any start-up the dampers require preheating at operating temperature.

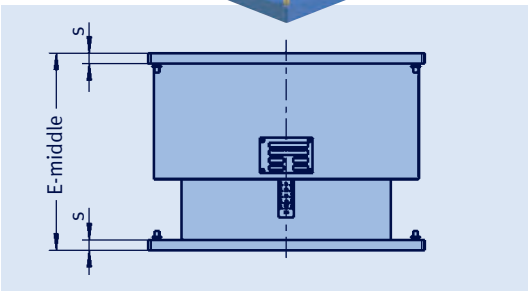

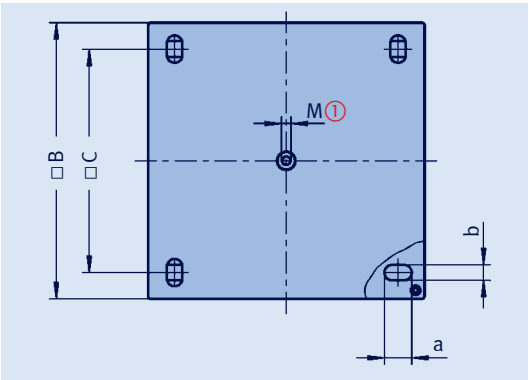

- **load range: 562lbs [2.5kN] up to 22,450lbs [100kN]**
- **frequency range: up to 35Hz**
- **temperature range: 68°F [20°C] up to 176°F [80°C] (in 50°F [10°C] stages)**
- **offset (cold position) to mid-position: up to ± 1.57inch [±40mm] (horizontal/ vertical)**

The table values are minimum values at ordered working temperature. At lower temperatures the damping resistance increases. If required, the equivalent stiffness (lbs/inch) can be given in vertical and horizontal directions.

Further information about vibration reducing products are to be taken from the product catalogue VICODA.

① Inner thread for transport ring screw.

Order details:
viscoelastic damper
type 3D .. 44-D
marking: ...
nominal load: ...lbs
offset: ...
x: ...inch, y: ...inch, z: ...inch
operating temperature: ...°F

type	nominal load [lbs]	E	□B	□C	s	a	b	M①	weight [lbs]
3D 03 44-D	562.0	9.45	10.63	8.46	0.31	1.34	0.55	–	35
3D 05 44-D	1124.0	9.45	11.42	9.06	0.31	1.34	0.55	–	42
3D 10 44-D	2248.1	9.45	13.39	10.63	0.39	1.50	0.71	M16	68
3D 20 44-D	4496.2	11.02	15.35	12.60	0.47	1.65	0.87	M16	112
3D 30 44-D	6744.3	12.60	17.32	13.78	0.59	1.81	1.02	M16	185
3D 40 44-D	8992.4	13.19	18.50	14.96	0.71	1.81	1.02	M16	240
3D 60 44-D	13488.5	13.78	20.08	16.14	0.79	2.09	1.30	M16	328
3D 80 44-D	17984.7	15.35	21.06	16.93	0.98	2.32	1.54	M16	421
3D H1 44-D	22480.9	15.94	22.83	18.11	1.18	2.32	1.54	M16	542

		vertical damping resistance [lbs s/inch]							horizontal damping resistance [lbs s/inch]						
type	nominal load [lbs]	5 [Hz]	10 [Hz]	15 [Hz]	20 [Hz]	25 [Hz]	30 [Hz]	35 [Hz]	5 [Hz]	10 [Hz]	15 [Hz]	20 [Hz]	25 [Hz]	30 [Hz]	35 [Hz]
3D 03 44-D	562.0	90.1	68.5	58.4	52.1	47.7	44.4	41.7	80.0	61.7	49.1	40.4	34.5	30.9	29.1
3D 05 44-D	1124.0	158.9	120.8	102.9	91.9	84.1	78.3	73.6	135.7	104.6	83.4	68.6	58.6	52.4	49.4
3D 10 44-D	2248.1	270.6	205.8	175.3	156.5	143.3	133.3	125.4	213.6	164.6	131.2	107.9	92.2	82.5	77.7
3D 20 44-D	4496.2	510.3	388.1	330.6	295.1	270.2	251.4	236.6	537.3	414.0	330.0	271.5	231.9	207.5	195.5
3D 30 44-D	6744.3	821.9	625.0	532.5	475.3	435.2	405.0	381.0	849.0	654.3	521.6	429.1	366.6	327.9	309.0
3D 40 44-D	8992.4	929.3	706.7	602.1	537.4	492.1	457.9	430.8	1312.8	1011.7	806.5	663.5	566.8	507.0	477.8
3D 60 44-D	13488.5	1081.7	822.6	700.8	625.6	572.8	533.0	501.5	1673.4	1289.6	1028.0	845.7	722.5	646.2	609.1
3D 80 44-D	17984.7	1312.7	998.3	850.5	759.2	695.1	646.8	608.6	2097.4	1616.3	1288.5	1060.0	905.5	810.0	763.4
3D H1 44-D	22480.9	1942.5	1477.2	1258.6	1123.4	1028.6	957.1	900.6	3164.0	2438.4	1943.8	1599.2	1366.1	1221.9	1151.7

Viscoelastic dampers
Type 3D .. 33-L, 3D .. 55-L

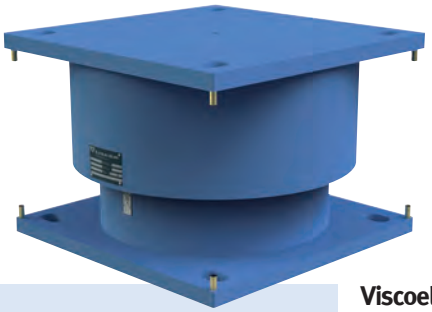

Selection and dimensions

When selecting viscoelastic dampers the **temperature on site** is important. Series 3D .. ..-L is designed for use in a temperature range from 14°F [–10°C] up to 104°F [+40°C]. In this temperature range the damper functions with relatively constant characteristics. The values were determined for a temperature of 68°F [20°C].

The choice of damper size depends on the nominal load. The offset in horizontal and vertical directions must be taken into account for the cold load position. For LISEGA dampers in the 33-L and 55-L series it amounts to ±1.18inch [±30mm] and ±1.97inch [±50mm] respectively in horizontal / vertical directions.

The operation of the dampers should be in the center position. In order to achieve the necessary damping resistance, the viscous dampers should not exceed a tolerance of ±0.79inch [±20mm] from the center position in any operating condition. The dampers do not need to be preheated to operating temperature before start-up.

The table values are minimum values at 68°F [20°C]. At lower temperatures the damping resistance increases. If required, the equivalent stiffness (lbs/inch) can be given in vertical and horizontal directions.

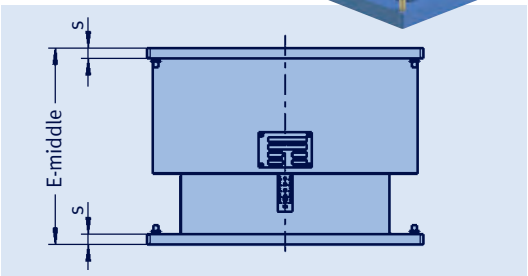

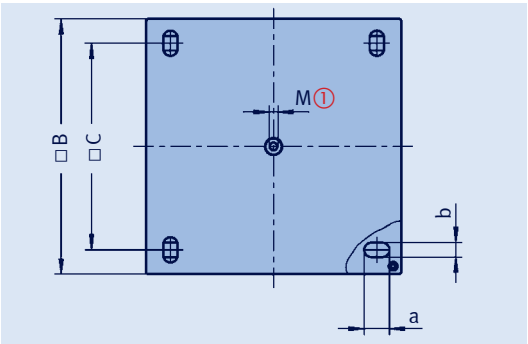

Viscoelastic dampers type 3D 05 33-L to 3D 50 55-L

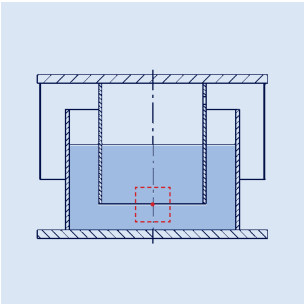

= working range round the mid-position

- **load range: 562lbs [2.5kN] up to 11,225lbs [50kN]**
- **frequency range: up to 35 Hz**
- **temperature range: 14°F [–10°C] up to 104°F [+40°C]**
- **offset (cold position) to mid-position:**
  up to ±1.18inch [±30 mm] (type 3D .. 33-L)
  up to ±1.97inch [±50 mm] (type 3D .. 55-L)
  (horizontal/vertical)

Further information about vibration reducing products are to be taken from the product catalogue VICODA.

① Inner thread for transport ring bolt

type	nominal load [lbs]	E	□B	□C	s	a	b	M①	weight [lbs]
3D 05 33-L	1124.0	10.63	10.24	7.68	0.39	1.50	0.71	M16	46
3D 10 33-L	2248.1	10.63	11.61	9.06	0.39	1.50	0.71	M16	66
3D 15 33-L	3372.1	11.02	13.19	10.43	0.59	1.65	0.87	M16	106
3D 25 33-L	5620.2	11.42	16.73	13.39	0.79	1.81	1.02	M16	234
3D 40 33-L	8992.4	11.81	21.26	17.32	0.98	2.09	1.30	M16	425
3D 50 33-L	11240.5	14.96	23.23	18.90	1.18	2.32	1.54	M16	635

type	nominal load [lbs]	E	□B	□C	s	a	b	M①	weight [lbs]
3D 05 55-L	1124.0	15.35	12.80	10.24	0.39	1.50	0.71	M16	86
3D 10 55-L	2248.1	15.35	14.17	11.42	0.39	1.65	0.87	M16	108
3D 15 55-L	3372.1	16.14	16.54	13.58	0.79	1.81	1.02	M16	236
3D 25 55-L	5620.2	16.14	20.67	16.54	0.79	1.81	1.02	M16	348
3D 40 55-L	8992.4	19.29	23.23	18.50	0.98	2.09	1.30	M16	622
3D 50 55-L	11240.5	19.69	28.74	23.23	1.18	2.32	1.54	M16	1078

Order details:
viscoelastic damper
type 3D .. ..–L
marking: ...
nominal load: ...lbs
offset: ...
x: ...inch, y: ...inch z: ...inch
operating temperature: ...°F

type	nominal load [lbs]	vertical damping resistance [lbs s/inch]							horizontal damping resistance [lbs s/inch]						
		5 [Hz]	10 [Hz]	15 [Hz]	20 [Hz]	25 [Hz]	30 [Hz]	35 [Hz]	5 [Hz]	10 [Hz]	15 [Hz]	20 [Hz]	25 [Hz]	30 [Hz]	35 [Hz]
3D 05 ..-L	1124.0	58.2	44.4	37.9	33.9	31.0	28.9	27.2	66.2	49.8	42.2	37.5	34.2	31.7	29.8
3D 10 ..-L	2248.1	111.8	85.3	72.8	65.1	59.6	55.5	52.3	137.3	103.3	87.5	77.7	70.9	65.8	61.8
3D 15 ..-L	3372.1	170.0	129.7	110.7	99.0	90.7	84.5	79.6	234.1	176.2	149.2	132.6	121.0	112.3	105.4
3D 25 ..-L	5620.2	313.9	239.5	204.5	182.8	167.6	156.1	146.9	571.3	429.9	364.1	323.6	295.3	274.0	257.2
3D 40 ..-L	8992.4	589.1	449.5	383.8	343.0	314.4	292.9	275.8	1240.9	933.9	790.9	702.9	641.4	595.2	558.8
3D 50 ..-L	11240.5	998.1	761.7	650.3	581.3	532.8	496.2	467.3	2503.1	1883.9	1595.4	1417.9	1293.9	1200.7	1127.2

Rigid struts
Type 39

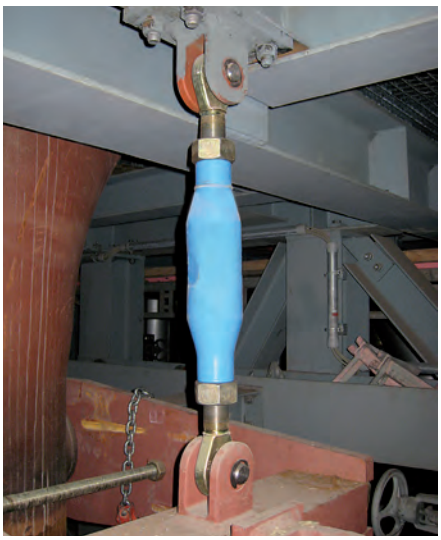

Selection

When selecting rigid struts from the below tables, these points must be noted:

1. The specified operating load must be covered by the nominal load.
2. The load group is determined at the same time by the nominal load.
3. The adjustment range available for the rigid struts is given for the specified installation length.
4. The weight is specified at the intersection between load group and adjustment range. If the intersection lies below the red boundary line, it is a matter of an extended length with reduced load that must be checked in the diagram on page 3.28 for agreement with the specified operating load.
5. When ordering, the type designation is to be completed at the 3rd digit by entering the load group number.

Permissible loads and weights

			nominal load [lbs x 1000]										nom. load [lbs x 1000]	
			0.90	1.80	4.00	10.35	22.45	44.9	78.6				123.5	224
			load group ①										load group ①	
type	adjustment range	'E' middle	2	3	4	5	6	7	8	type	adjustment range	'E' middle	9	0
			weight [lbs]										weight [lbs]	
① 39 .0 32	11.81 - 17.72	14.76	3.1	4.6	5.1					39 .0 83	31.50 - 37.40	34.45	157	
39 .0 42	15.75 - 21.65	18.70	4.2	6.2	6.6	15.5	17			39 .0 93	35.43 - 41.34	38.39	170	
39 .0 52	19.69 - 25.59	22.64	5.1	7.7	8.2	19	20	35		39 .1 03	39.37 - 45.28	42.32	181	379
39 .0 74	23.62 - 35.43	29.53	5.3	7.5	11	19	29	49		39 .1 13	43.31 - 49.21	46.26		401
39 .0 84	29.53 - 35.43	32.48							88	39 .1 23	47.24 - 53.15	50.20		423
39 .1 04	33.46 - 45.28	39.37	7.3	9.9	14	24	37	62	104	39 .1 33	51.18 - 57.09	54.13		509
39 .1 24	43.31 - 55.12	49.21	9.0	12	18	29	46	75	126	39 .1 23	43.31 - 55.12	49.21	194	
39 .1 54	53.15 - 64.96	59.06	11	15	22	31	55	88	148	39 .1 53	53.15 - 64.96	59.06	267	545
39 .1 74	62.99 - 74.80	68.90	(13)	17	24	35	64	101	170	39 .1 73	62.99 - 74.80	68.90	307	595
39 .2 04	72.83 - 84.65	78.74	(15)	28	29	40	73	115	190	39 .2 03	72.83 - 84.65	78.74	346	648
39 .2 24	82.68 - 94.49	88.58	(16)	31	33	44	82	128	212	39 .2 23	82.68 - 94.49	88.58	386	772
39 .2 54	92.52 - 104.33	98.43		35	35	49	90	143	234	39 .2 53	92.52 - 104.33	98.43	426	836
39 .2 74	102.36 - 114.17	108.27			(40)	53	99	157	254	39 .2 73	102.36 - 114.17	108.27	465	902
39 .3 04	112.20 - 124.02	118.11			(42)	(57)	108	170	276	39 .3 03	112.20 - 124.02	118.11	505	966
39 .3 24	122.05 - 133.86	127.95			(46)	(62)	117	183	298	39 .3 23	122.05 - 133.86	127.95	545	1030
39 .3 54	131.89 - 143.70	137.80			(51)	(66)	126	196	318	39 .3 53	131.89 - 143.70	137.80	584	1096
39 .3 74	141.73 - 153.54	147.64				(68)	135	210	340	39 .3 73	141.73 - 153.54	147.64	624	1160
39 .4 04	151.57 - 163.39	157.48					(143)	223	362	39 .4 03	151.57 - 163.39	157.48	664	1224
39 .4 24	161.42 - 173.23	167.32					(152)	236	384	39 .4 23	161.42 - 173.23	167.32	704	1290
39 .4 54	171.26 - 183.07	177.17					(161)	249	404	39 .4 53	171.26 - 183.07	177.17	743	1354
39 .4 74	181.10 - 192.91	187.01					(170)	(262)	426	39 .4 73	181.10 - 192.91	187.01	783	1420
39 .5 04	190.94 - 202.76	196.85						(278)	448	39 .5 03	190.94 - 202.76	196.85	820	1484
										39 .5 23	200.79 - 212.60	206.69	860	1548
reduced loads for overlength (below red line) see diagram on page 3.28										39 .5 53	210.63 - 222.44	216.54	(900)	1614
slenderness ratio $\lambda \leq 150$, for greater lengths the slenderness ratio can range between										39 .5 73	220.47 - 232.28	226.38	(939)	1678
150 and 200; the weight of these rigid struts is given in brackets.										39 .6 03	230.31 - 242.13	236.22		1742

① The type designation is to be completed in the 3rd digit with the load group.

Load diagram for extended lengths

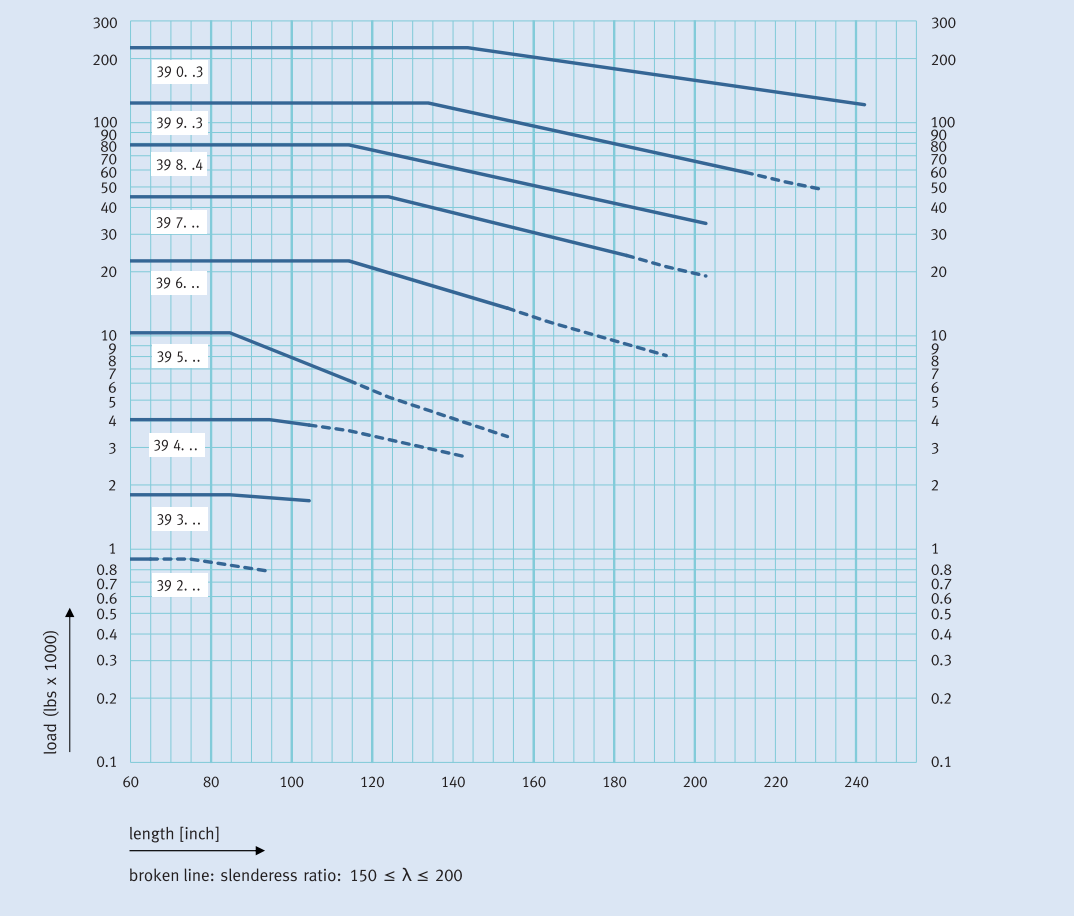

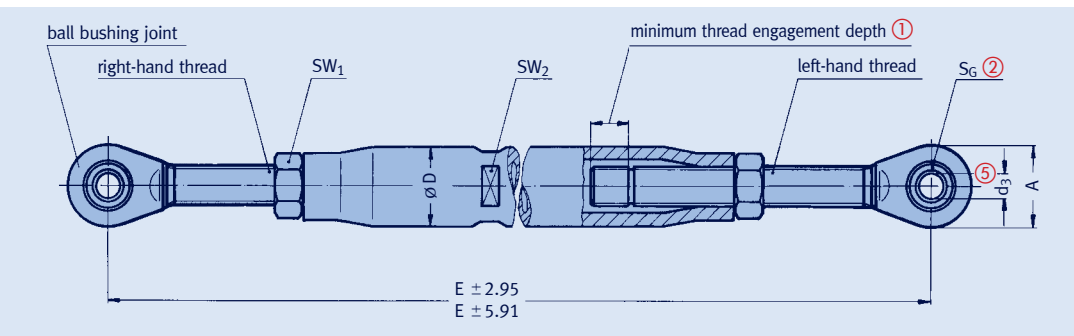

type ③	nominal load [lbs x 1000]	A	ø D	ø d3 ⑤	E ④ min	E max	SW1	SW2	SG ②
39 2. ..	0.90	1.18	(1.19) 1.50	0.393	11.81	74.80	1.06	(1.06) 1.26	0.36
39 3. ..	1.80	1.50	(1.50/1.58) 1.70/2.25	0.472	11.81	84.65	1.26	(1.26) 1.41/1.81	0.40
39 4. ..	4.00	1.77	(1.50/1.58) 2.25	0.590	11.81	94.49	1.41	(1.26) 1.81	0.48
39 5. ..	10.35	2.36	(2.25/2.37) 2.41	0.787	15.75	84.65	2.36	1.96	0.63
39 6. ..	22.45	3.23	(2.25/2.37) 3.27	1.181	15.75	114.17	2.36	(1.96) 2.75	0.87
39 7. ..	44.90	4.72	(2.76/2.96) 4.02	1.968	19.69	124.02	2.75/2.95	(2.36) 3.34	1.38
39 8. .4	78.60	5.91	4.53	2.362	29.53	114.17	3.74	3.93	1.74
39 9. .3	123.50	8.27	4.53/5.00	2.755	31.50	133.86	4.33	3.93/4.33	1.93
39 0. .3	224.00	11.54	6.26/6.66	3.937	39.37	143.70	6.10	5.31/5.70	2.76

Rigid struts type 39 20 32 to 39 06 03

The diagram on the left shows the reduced load values against nominal load that must be taken into account for extended lengths.

Material: carbon steel

An exceeding of the maximum lateral displacement of ±6° is to avoid.

① Minimum thread engagement depth on the ball bushing joint marked by an undercut.

② Ball bushing width.

③ The type designation is to be completed by the length index (4th and 5th or 4th to 6th digits in the type designation, page 3.27).

④ Due to their design, the rigid struts have freely variable adjustment, with right-hand / left-hand threads, similar to a turnbuckle. Shorter installation lengths for rigid struts are possible as special designs.

⑤ Connection possibilities: see pin diameters of weld-on brackets type 35 or dynamic clamps type 36 / 37 in product group 3.

(...) Values in brackets: up to E_{max} = 25.59inch [650mm].

Depending on load group and length the rigid struts are subject to alternative manufacturing technologies which may result in designs different to the shown.

Order details:
rigid strut type 39 .. ..

Dynamic clamps
Selection overview OD 1.33" – OD 3.50"

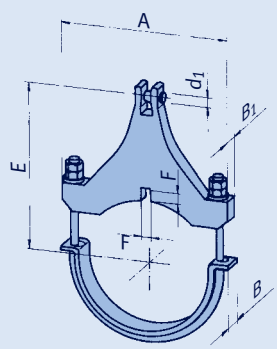

type 36 .. .1

① Calculation of intermediate values: linear interpolation.

② The connection load group is to be specified when ordering. On selection of a smaller load group than that shown in the table, the 'E' dimensions of the clamp are reduced (see table on page 3.15).

③ Shear lug dimensions: F minus 0.04inch [1mm]; B_1 plus 0.08inch [2mm] (see page 3.44).

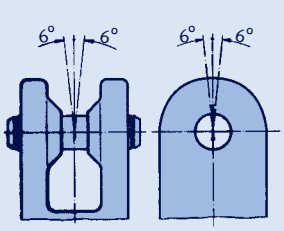

load angle ≤ 6°

OD 1.33" [33.7mm] (ND 25/1")

	permissible load [lbs x 1000] ①										d_1	E_{max}					max ②	wt.
type	210	480	660	840	930	950	985	1040	1075	1110°F	②	②	A	B	B_1	F ③	load gr.	[lbs]
36 03 11	0.90	0.90	0.90								0.393	4.33	2.95	1.97	0.79	0.35	2	2.0
36 03 21			0.90	0.90	0.90						0.393	6.10	2.95	1.97	0.79	0.35	2	2.4
36 03 31					0.90	0.90	0.90	0.72			0.393	6.30	2.95	1.97	0.79	0.35	2	2.4
36 03 41								0.90	0.72	0.54	0.393	6.30	2.95	1.97	0.79	0.35	2	2.4

OD 1.67" [42.4mm] (ND 32/1 1/4")

	permissible load [lbs x 1000] ①										d_1	E_{max}					max ②	wt.
type	210	480	660	840	930	950	985	1040	1075	1110°F	②	②	A	B	B_1	F ③	load gr.	[lbs]
36 04 11	1.80	1.80	1.80								0.472	5.12	3.35	1.97	0.79	0.35	3	2.5
36 04 21			1.62	1.42	1.30						0.472	6.89	3.35	1.97	0.79	0.35	3	3.1
36 04 31					0.90	0.90	0.90	0.70			0.393	6.89	3.35	1.97	0.79	0.35	2	2.9
36 04 41								0.90	0.74	0.56	0.393	6.89	3.35	1.97	0.79	0.35	2	2.9

OD 1.90" [48.3mm] (ND 40/1 1/2")

	permissible load [lbs x 1000] ①										d_1	E_{max}					max ②	wt.
type	210	480	660	840	930	950	985	1040	1075	1110°F	②	②	A	B	B_1	F ③	load gr.	[lbs]
36 05 11	1.80	1.80	1.78								0.472	5.12	3.54	1.97	0.79	0.35	3	2.6
36 05 21			1.62	1.42	1.33						0.472	6.89	3.54	1.97	0.79	0.35	3	3.3
36 05 31					0.90	0.90	0.90	0.72			0.393	6.89	3.54	1.97	0.79	0.35	2	3.1
36 05 41								0.90	0.72	0.54	0.393	6.89	3.54	1.97	0.79	0.35	2	3.1

OD 2.37" [60.3mm] (ND 50/2")

	permissible load [lbs x 1000] ①										d_1	E_{max}					max ②	wt.
type	210	480	660	840	930	950	985	1040	1075	1110°F	②	②	A	B	B_1	F ③	load gr.	[lbs]
36 06 11	3.60	3.37	2.70								0.590	5.91	4.33	1.97	0.98	0.35	4	4.2
36 06 21			1.80	1.80	1.80						0.472	7.48	4.33	1.97	0.98	0.35	3	4.9
36 06 31					1.80	1.80	1.78	1.15			0.472	7.68	4.33	1.97	0.98	0.35	3	4.8
36 06 41								1.46	1.19	0.85	0.472	7.68	4.33	1.97	0.98	0.35	3	4.8

OD 2.87" [73mm] (ND 65/2 1/2")

	permissible load [lbs x 1000] ①										d_1	E_{max}					max ②	wt.
type	210	480	660	840	930	950	985	1040	1075	1110°F	②	②	A	B	B_1	F ③	load gr.	[lbs]
36 07 11	3.60	3.15	2.92								0.590	6.30	4.72	1.97	0.98	0.35	4	4.9
36 07 21			1.80	1.80	1.80						0.472	8.27	4.72	1.97	0.98	0.35	3	5.9
36 07 31					1.80	1.80	1.71	1.10			0.472	8.46	4.72	1.97	0.98	0.35	3	5.9
36 07 41								1.42	1.15	0.85	0.472	8.46	4.72	1.97	0.98	0.35	3	5.8

OD 3.00" [76.1mm] (ND 65/2 1/2")

	permissible load [lbs x 1000] ①										d_1	E_{max}					max ②	wt.
type	210	480	660	840	930	950	985	1040	1075	1110°F	②	②	A	B	B_1	F ③	load gr.	[lbs]
36 08 11	3.60	3.15	2.92								0.590	6.30	4.92	1.97	0.98	0.35	4	5.0
36 08 21			1.80	1.80	1.80						0.472	8.27	4.92	1.97	0.98	0.35	3	6.1
36 08 31					1.80	1.80	1.71	1.10			0.472	8.46	4.92	1.97	0.98	0.35	3	6.0
36 08 41								1.42	1.15	0.85	0.472	8.46	4.92	1.97	0.98	0.35	3	5.9

OD 3.50" [88.9mm] (ND 80/3")

	permissible load [lbs x 1000] ①										d_1	E_{max}					max ②	wt.
type	210	480	660	840	930	950	985	1040	1075	1110°F	②	②	A	B	B_1	F ③	load gr.	[lbs]
36 09 11	6.07	5.40	4.95								0.787	7.28	5.91	1.97	1.18	0.43	5	8.8
36 09 21			4.05	4.05	4.05						0.590	9.06	5.91	1.97	1.18	0.43	4	10
36 09 31					3.82	3.82	3.37	2.20			0.590	9.25	5.91	1.97	1.18	0.43	4	9.8
36 09 41								2.70	2.25	1.62	0.590	9.25	5.91	1.97	1.18	0.43	4	9.7

Dynamic clamps
Selection overview OD 4.25" – OD 6.25"

3

OD 4.25" [108mm] (ND 100/4")

	permissible load [lbs x 1000] ①										d_1	E_{max}					max ②	wt.
type	210	480	660	840	930	950	985	1040	1075	1110°F	②	②	A	B	B_1	F ③	load gr.	[lbs]
36 10 11	7.19	6.52	5.85								0.787	8.07	6.50	1.97	1.38	0.43	5	11
36 10 21			4.05	4.05	4.05						0.590	10.43	6.50	1.97	1.38	0.43	4	14
36 10 31					3.60	3.60	3.15	2.05			0.590	10.63	6.50	1.97	1.18	0.43	4	12
36 10 41								2.47	2.09	1.53	0.590	10.63	6.50	1.97	1.18	0.43	4	12

OD 4.50" [114.3mm] (ND 100/4")

	permissible load [lbs x 1000] ①										d_1	E_{max}					max ②	wt.
type	210	480	660	840	930	950	985	1040	1075	1110°F	②	②	A	B	B_1	F ③	load gr.	[lbs]
36 11 11	6.97	6.52	5.85								0.787	8.27	6.89	1.97	1.38	0.43	5	11
36 11 21			4.05	4.05	4.05						0.590	10.63	6.89	1.97	1.38	0.43	4	14
36 11 24	10.34	10.34	10.34	10.34	9.44						0.787	11.02	6.89	3.94	2.36	0.51	5	27
36 11 31					3.60	3.60	2.92	2.02			0.590	11.02	6.89	1.97	1.18	0.43	4	13
36 11 34					9.22	9.22	7.87	4.95			0.787	11.42	6.89	3.94	2.36	0.51	5	27
36 11 41								2.47	2.05	1.53	0.590	11.02	6.89	1.97	1.18	0.43	4	13
36 11 44								6.29	4.72	3.15	0.787	11.42	6.89	3.94	2.36	0.51	5	27

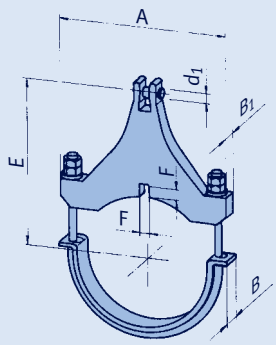

type 36 .. .1

OD 5.25" [133mm] (ND 125/5")

	permissible load [lbs x 1000] ①										d_1	E_{max}					max ②	wt.
type	210	480	660	840	930	950	985	1040	1075	1110°F	②	②	A	B	B_1	F ③	load gr.	[lbs]
36 13 11	6.97	6.29	5.85								0.787	8.86	7.48	1.97	1.38	0.43	5	13
36 13 21			4.05	4.05	3.82						0.590	10.83	7.48	1.97	1.18	0.43	4	15
36 13 24	10.34	10.34	10.34	10.34	9.67						0.787	11.22	7.48	3.94	2.36	0.51	5	30
36 13 31					3.60	3.60	2.92	2.05			0.590	11.22	7.48	1.97	1.18	0.43	4	14
36 13 34					9.44	9.22	7.87	4.95			0.787	11.61	7.48	3.94	2.36	0.51	5	30
36 13 41								2.47	1.91	1.46	0.590	11.22	7.48	1.97	1.18	0.43	4	14
36 13 44								6.52	5.17	3.60	0.787	11.61	7.48	3.94	2.36	0.51	5	30

OD 5.50" [139.7mm] (ND 125/5")

	permissible load [lbs x 1000] ①										d_1	E_{max}					max ②	wt.
type	210	480	660	840	930	950	985	1040	1075	1110°F	②	②	A	B	B_1	F ③	load gr.	[lbs]
36 14 11	6.97	6.29	5.85								0.787	9.06	7.87	1.97	1.38	0.43	5	13
36 14 21			4.05	4.05	3.60						0.590	11.22	7.87	1.97	1.18	0.43	4	15
36 14 24	13.49	12.36	11.24	9.67	8.99						1.181	12.60	7.87	3.94	2.36	0.51	6	37
36 14 31					3.60	3.60	2.92	2.00			0.590	11.61	7.87	1.97	1.18	0.43	4	15
36 14 34			10.34	10.12	9.22	8.99	7.64	4.95			0.787	12.01	7.87	3.94	2.36	0.51	5	32
36 14 41								2.47	1.91	1.46	0.590	11.61	7.87	1.97	1.18	0.43	4	15
36 14 44								6.52	5.17	3.60	0.787	12.01	7.87	3.94	2.36	0.51	5	32

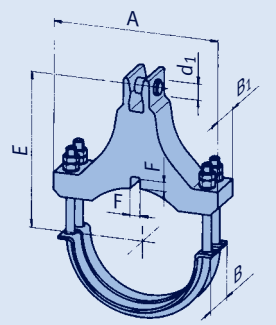

type 36 .. .4

OD 6.25" [159mm] (ND 150/6")

	permissible load [lbs x 1000] ①										d_1	E_{max}					max ②	wt.
type	210	480	660	840	930	950	985	1040	1075	1110°F	②	②	A	B	B_1	F ③	load gr.	[lbs]
36 16 11	6.74	6.29	5.62								0.787	9.65	8.66	1.97	1.38	0.43	5	15
36 16 21			4.05	4.05	3.60						0.590	11.81	8.66	1.97	1.18	0.43	4	17
36 16 24	13.26	12.14	11.02	9.67	8.99						1.181	13.19	8.66	3.94	2.36	0.51	6	41
36 16 31					3.60	3.37	2.92	1.98			0.590	12.20	8.66	1.97	1.18	0.43	4	17
36 16 34			10.34	9.89	9.22	8.99	7.64	4.95			0.787	12.60	8.66	3.94	2.36	0.51	5	36
36 16 41								2.47	1.98	1.51	0.590	12.20	8.66	1.97	1.18	0.43	4	17
36 16 44								6.29	5.17	3.82	0.787	12.60	8.66	3.94	2.36	0.51	5	36

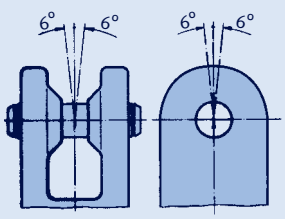

load angle ≤ 6°

① Calculation of intermediate values: linear interpolation.

② The connection load group is to be specified when ordering. On selection of a smaller load group than that shown in the table, the 'E' dimensions of the clamp are reduced (see table on page 3.15).

③ Shear lug dimensions: F minus 0.04inch [1mm]; B_1 plus 0.08inch [2mm] (see page 3.44).

Dynamic clamps
Selection overview OD 6.625" – OD 8.625"

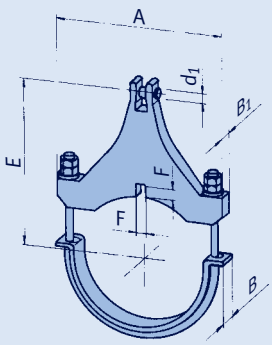

type 36 .. .1/2

OD 6.625" [168.3mm] (ND 150/6")

type	permissible load [lbs x 1000] ① 210	480	660	840	930	950	985	1040	1075	1110°F	d_1 ②	E_{max} ②	A	B	B_1	F ③	max load ② gr.	wt. [lbs]
36 17 11	6.5	5.8	5.4								0.787	10.63	9.06	1.97	1.38	0.43	5	17
36 17 12	11.2	10.3	8.1								1.181	10.63	9.45	1.97	1.77	0.43	6	25
36 17 21			4.0	3.8	3.6						0.590	12.40	9.06	1.97	1.18	0.43	4	19
36 17 22			7.9	6.5	6.3						0.787	12.40	9.45	1.97	1.57	0.43	5	23
36 17 24	13.3	12.1	11.0	9.7	9.0						1.181	13.39	9.06	3.94	2.36	0.51	6	43
36 17 31					3.6	3.4	2.9	1.9			0.590	12.60	9.06	1.97	1.18	0.43	4	18
36 17 32					4.0	4.0	4.0	3.1			0.590	12.60	9.45	1.97	1.57	0.43	4	22
36 17 34	22.5	21.4	19.6	17.1	15.7	15.5	13.0	8.5			1.181	13.58	9.45	3.94	3.15	0.63	6	59
36 17 41								2.5	2.0	1.5	0.590	12.60	9.06	1.97	1.18	0.43	4	18
36 17 42								3.6	2.9	2.2	0.590	12.60	9.45	1.97	1.57	0.43	4	22
36 17 44								11.0	9.0	6.5	1.181	13.58	9.45	3.94	3.15	0.63	6	60

OD 7.625" [193.7mm] (ND 175/7")

type	permissible load [lbs x 1000] ① 210	480	660	840	930	950	985	1040	1075	1110°F	d_1 ②	E_{max} ②	A	B	B_1	F ③	max load ② gr.	wt. [lbs]
36 19 11	11.2	10.3	9.2								1.181	11.22	10.43	1.97	1.77	0.43	6	28
36 19 12	14.6	13.3	12.1								1.181	11.22	10.83	1.97	1.77	0.51	6	31
36 19 21			7.4	6.5	6.1						0.787	13.98	10.43	1.97	1.57	0.43	5	28
36 19 22			11.7	10.1	9.4						1.181	13.98	10.83	1.97	1.77	0.51	6	39
36 19 24	22.5	21.4	19.6	17.1	15.7						1.181	13.98	10.43	3.94	3.15	0.51	6	65
36 19 31					4.0	4.0	4.0	3.1			0.590	13.78	10.43	1.97	1.57	0.43	4	26
36 19 32					8.8	8.8	7.6	5.2			0.787	13.78	10.83	1.97	1.77	0.51	5	34
36 19 34					15.3	15.1	12.8	8.3			1.181	14.76	10.43	3.94	3.15	0.63	6	68
36 19 41								3.8	2.9	2.2	0.590	13.78	10.43	1.97	1.57	0.43	4	26
36 19 42								5.6	4.5	3.4	0.787	13.78	10.83	1.97	1.77	0.51	5	34
36 19 44								10.6	8.5	6.5	1.181	14.76	10.43	3.94	3.15	0.63	6	70

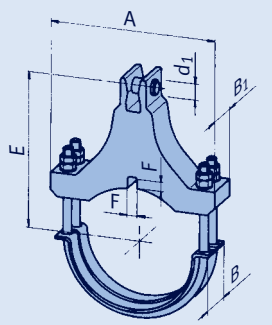

type 36 .. .4

OD 8.625" [219.1mm] (ND 200/8")

type	permissible load [lbs x 1000] ① 210	480	660	840	930	950	985	1040	1075	1110°F	d_1 ②	E_{max} ②	A	B	B_1	F ③	max load ② gr.	wt. [lbs]
36 22 11	11.0	10.1	9.2								1.181	12.20	11.42	1.97	1.77	0.43	6	31
36 22 12	14.6	13.3	12.4								1.181	12.20	11.81	1.97	1.77	0.51	6	35
36 22 21			7.2	6.3	5.8						0.787	15.16	11.42	1.97	1.57	0.43	5	30
36 22 22			11.2	9.9	9.2						1.181	15.16	11.81	1.97	1.77	0.51	6	44
36 22 24	22.5	20.9	19.1	16.6	15.3						1.181	15.16	11.42	3.94	3.15	0.51	6	74
36 22 31					4.0	4.0	4.0	3.1			0.590	14.57	11.42	1.97	1.57	0.43	4	26
36 22 32					9.0	9.0	7.9	4.9			0.787	14.57	11.81	1.97	1.77	0.51	5	36
36 22 34					15.1	14.8	12.6	8.1			1.181	15.55	11.42	3.94	3.15	0.63	6	76
36 22 41								3.8	2.9	2.2	0.590	14.57	11.42	1.97	1.57	0.43	4	27
36 22 42								5.8	4.5	3.4	0.787	14.57	11.81	1.97	1.77	0.51	5	36
36 22 44								10.6	8.5	6.3	1.181	15.55	11.42	3.94	3.15	0.63	6	78

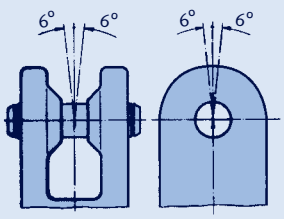

load angle ≤ 6°

① Calculation of intermediate values: linear interpolation.

② The connection load group is to be specified when ordering. On selection of a smaller load group than that shown in the table, the 'E' dimensions of the clamp are reduced (see table on page 3.15).

③ Shear lug dimensions: F minus 0.04inch [1mm]; B1 plus 0.08inch [2mm] (see page 3.44)

Dynamic clamps
Selection overview OD 9.625" - OD 10.75"

3

OD 9.625" [244.5mm] (ND 225/9")

	permissible load [lbs x 1000] ①										d_1	E_{max}					max ②	wt.
type	210	480	660	840	930	950	985	1040	1075	1110°F	②	②	A	B	B_1	F ③	load gr.	[lbs]
36 24 11	11.0	10.1	9.2								1.181	12.60	12.40	1.97	1.77	0.43	6	33
36 24 12	14.6	13.3	11.9								1.181	12.60	12.99	1.97	1.77	0.51	6	37
36 24 21			7.2	6.3	5.8						0.787	15.75	12.40	1.97	1.57	0.43	5	32
36 24 22			11.2	9.9	9.0						1.181	15.75	12.99	1.97	1.77	0.51	6	47
36 24 24	22.5	20.7	19.1	16.6	15.3						1.181	15.75	12.40	3.94	3.15	0.51	6	79
36 24 25	33.5	30.8	28.1	24.5	22.5						1.968	16.34	12.99	3.94	3.54	0.63	7	107
36 24 31					4.0	4.0	4.0	3.1			0.590	15.55	12.40	1.97	1.57	0.43	4	29
36 24 32					8.3	8.3	7.4	4.9			0.787	15.55	12.99	1.97	1.77	0.51	5	39
36 24 34					14.2	13.9	12.4	8.1			1.181	16.54	12.40	3.94	3.15	0.63	6	80
36 24 35					21.4	20.9	18.7	12.1			1.181	16.54	12.99	3.94	3.54	0.63	6	96
36 24 41								4.0	3.1	2.2	0.590	15.55	12.40	1.97	1.57	0.43	4	30
36 24 42								5.4	4.0	2.9	0.787	15.55	12.99	1.97	1.77	0.51	5	39
36 24 44								9.9	7.6	5.8	1.181	16.54	12.40	3.94	3.15	0.63	6	83
36 24 45								14.8	11.7	8.5	1.181	16.54	12.99	3.94	3.54	0.63	6	98

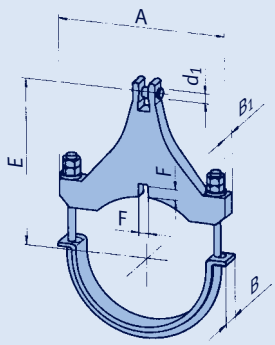

type 36 .. .1/2

OD 10.50" [267mm] (ND 250/10")

	permissible load [lbs x 1000] ①										d_1	E_{max}					max ②	wt.
type	210	480	660	840	930	950	985	1040	1075	1110°F	②	②	A	B	B_1	F ③	load gr.	[lbs]
36 26 11	11.0	9.9	9.2								1.181	13.19	13.39	1.97	1.77	0.43	6	36
36 26 12	14.6	13.3	12.1								1.181	13.19	13.78	1.97	1.77	0.51	6	40
36 26 21			7.2	6.3	5.8						0.787	16.14	13.39	1.97	1.57	0.43	5	34
36 26 22			11.2	9.9	9.0						1.181	16.14	13.78	1.97	1.77	0.51	6	48
36 26 24	22.5	20.9	19.1	16.6	15.3						1.181	16.14	13.39	3.94	3.15	0.51	6	82
36 26 25	33.7	30.8	28.1	24.5	22.7						1.968	16.73	13.78	3.94	3.54	0.63	7	111
36 26 31					4.0	4.0	4.0	3.1			0.590	16.14	13.39	1.97	1.57	0.43	4	31
36 26 32					8.5	8.5	7.6	4.9			0.787	16.14	13.78	1.97	1.77	0.51	5	41
36 26 34					14.8	14.4	12.4	7.9			1.181	17.13	13.39	3.94	3.15	0.63	6	84
36 26 35					21.8	21.6	18.7	12.1			1.181	17.13	13.78	3.94	3.54	0.63	6	101
36 26 41								4.0	3.1	2.5	0.590	16.14	13.39	1.97	1.57	0.43	4	32
36 26 42								5.6	4.3	3.4	0.787	16.14	13.78	1.97	1.77	0.51	5	42
36 26 44								10.3	8.1	6.1	1.181	17.13	13.39	3.94	3.15	0.63	6	87
36 26 45								15.3	11.9	9.0	1.181	17.13	13.78	3.94	3.54	0.63	6	103

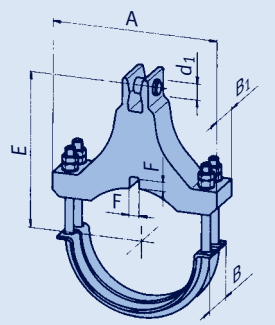

type 36 .. .4/5

OD 10.75" [273mm] (ND 250/10")

	permissible load [lbs x 1000] ①										d_1	E_{max}					max ②	wt.
type	210	480	660	840	930	950	985	1040	1075	1110°F	②	②	A	B	B_1	F ③	load gr.	[lbs]
36 27 11	10.8	9.9	9.0								1.181	13.58	13.58	1.97	1.77	0.43	6	37
36 27 12	14.6	13.3	12.1								1.181	13.58	13.98	1.97	1.77	0.51	6	41
36 27 14	24.7	22.7	19.8								1.968	14.17	13.58	3.94	3.15	0.51	7	76
36 27 15	37.1	33.9	29.2								1.968	14.17	13.98	3.94	3.54	0.63	7	92
36 27 21			7.2	6.1	5.6						0.787	16.54	13.58	1.97	1.57	0.43	5	35
36 27 22			11.2	9.7	9.0						1.181	16.54	13.98	1.97	1.77	0.51	6	50
36 27 24			18.9	16.4	15.1						1.181	16.54	13.58	3.94	3.15	0.51	6	84
36 27 25			27.9	24.3	22.5						1.968	17.13	13.98	3.94	3.54	0.63	7	114
36 27 31					4.0	4.0	4.0	2.9			0.590	17.13	13.58	1.97	1.57	0.43	4	33
36 27 32					8.3	8.3	7.2	4.7			0.787	17.13	13.98	1.97	1.77	0.51	5	44
36 27 34					14.2	13.9	11.9	7.6			1.181	18.11	13.58	3.94	3.15	0.63	6	91
36 27 35					21.4	21.1	18.2	11.7			1.181	18.11	13.98	3.94	3.54	0.63	6	108
36 27 41								3.8	3.1	2.2	0.590	17.13	13.58	1.97	1.57	0.43	4	34
36 27 42								5.4	4.0	2.9	0.787	17.13	13.98	1.97	1.77	0.51	5	44
36 27 44								9.9	8.1	6.1	1.181	18.11	13.58	3.94	3.15	0.63	6	94
36 27 45								15.1	11.7	8.5	1.181	18.11	13.98	3.94	3.54	0.63	6	109

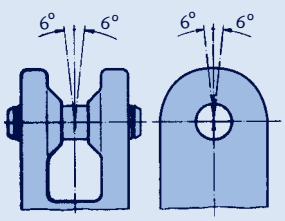

load angle ≤ 6°

① Calculation of intermediate values: linear interpolation.

② The connection load group is to be specified when ordering. On selection of a smaller load group than that shown in the table, the 'E' dimensions of the clamp are reduced (see table on page 3.15).

③ Shear lug dimensions: F minus 0.04inch [1mm]; B1 plus 0.08inch [2mm] (see page 3.44)

Dynamic clamps
Selection overview OD 12.75" – OD 14"

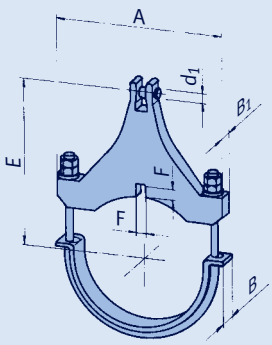

type 36 .. .1/2/3

OD 12.75" [323.9mm] (ND 300/12")

	permissible load [lbs x 1000] ①										d_1	E_{max}					max ②	wt.
type	210	480	660	840	930	950	985	1040	1075	1110°F	②	②	A	B	B_1	F ③	load gr.	[lbs]
36 32 11	9.9	9.0	8.3								0.787	14.96	15.75	2.36	1.57	0.43	5	41
36 32 12	14.6	13.3	12.6								1.181	14.96	16.34	2.36	1.77	0.51	6	52
36 32 13	22.5	22.5	19.8								1.181	14.96	16.93	2.36	2.36	0.51	6	74
36 32 14	36.6	33.5	30.8								1.968	15.55	16.34	4.72	3.54	0.63	7	114
36 32 15	45.0	45.0	39.8								1.968	15.55	16.93	4.72	4.72	0.63	7	159
36 32 21			7.0	6.1	5.6						0.787	17.72	15.75	2.36	1.57	0.43	5	44
36 32 22			11.0	9.7	9.0						1.181	17.72	16.34	2.36	1.77	0.51	6	61
36 32 23			19.8	16.4	15.5						1.181	17.72	16.93	2.36	2.36	0.51	6	85
36 32 24			27.7	24.1	22.3						1.968	18.31	16.34	4.72	3.54	0.63	7	132
36 32 25			41.8	38.7	37.1						1.968	18.31	16.93	4.72	4.72	0.83	7	191
36 32 31					4.0	4.0	4.0	2.9			0.590	17.72	15.75	2.36	1.57	0.43	4	41
36 32 32					8.5	8.5	7.2	4.7			0.787	18.50	16.34	2.36	1.77	0.51	5	55
36 32 33					16.0	15.7	13.3	8.5			1.181	18.50	16.93	2.36	2.36	0.51	6	86
36 32 34					22.0	21.8	18.4	11.9			1.181	18.50	16.34	4.72	3.54	0.63	6	122
36 32 35					35.3	34.8	32.6	21.1			1.968	19.09	16.93	4.72	4.72	0.83	7	188
36 32 41								3.8	3.1	2.5	0.590	17.72	15.75	2.36	1.57	0.43	4	42
36 32 42								5.6	4.3	3.4	0.787	18.50	16.34	2.36	1.77	0.51	5	55
36 32 43								10.8	8.3	6.1	1.181	18.50	16.93	2.36	2.36	0.51	6	88
36 32 44								15.5	12.6	9.4	1.181	18.50	16.34	4.72	3.54	0.63	6	122
36 32 45								26.3	20.5	16.0	1.968	19.09	16.93	4.72	4.72	0.83	7	192

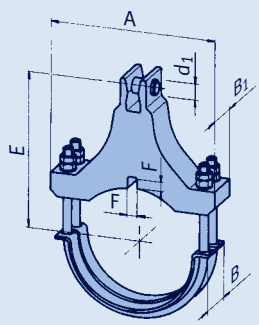

type 36 .. .4/5

OD 14" [355.6mm] (ND 350/14")

	permissible load [lbs x 1000] ①										d_1	E_{max}					max ②	wt.
type	210	480	660	840	930	950	985	1040	1075	1110°F	②	②	A	B	B_1	F ③	load gr.	[lbs]
36 36 11	9.9	9.0	8.3								0.787	15.55	17.13	2.36	1.57	0.43	5	44
36 36 12	14.6	13.3	12.6								1.181	15.55	17.52	2.36	1.77	0.51	6	56
36 36 13	22.5	22.5	21.6								1.181	15.55	18.31	2.36	2.36	0.51	6	78
36 36 14	37.1	33.9	31.0								1.968	16.14	17.52	4.72	3.54	0.63	7	122
36 36 15	45.0	45.0	43.4								1.968	16.14	18.31	4.72	4.72	0.63	7	170
36 36 21			6.7	5.8	5.4						0.787	18.90	17.13	2.36	1.57	0.43	5	48
36 36 22			10.8	9.4	8.8						1.181	18.90	17.52	2.36	1.77	0.51	6	66
36 36 23			20.0	16.6	16.0						1.181	18.90	18.31	2.36	2.36	0.51	6	92
36 36 24			27.2	23.6	21.8						1.968	19.49	17.52	4.72	3.54	0.63	7	144
36 36 25			41.8	38.7	37.1						1.968	19.49	18.31	4.72	4.72	0.83	7	205
36 36 31					4.0	4.0	4.0	2.9			0.590	18.70	17.13	2.36	1.57	0.43	4	44
36 36 32					8.5	8.3	7.0	4.5			0.787	19.49	17.52	2.36	1.77	0.51	5	59
36 36 33					15.7	15.5	13.3	8.5			1.181	19.49	18.31	2.36	2.36	0.51	6	91
36 36 34					21.8	21.6	18.2	11.9			1.181	19.49	17.52	4.72	3.54	0.63	6	133
36 36 35		45.0	45.0	39.3	36.9	36.4	32.1	20.9			1.968	20.08	18.31	4.72	4.72	0.83	7	201
36 36 41								3.8	2.9	2.2	0.590	18.70	17.13	2.36	1.57	0.43	4	45
36 36 42								5.8	4.5	3.6	0.787	19.49	17.52	2.36	1.77	0.51	5	59
36 36 43								11.0	8.8	6.3	1.181	19.49	18.31	2.36	2.36	0.51	6	94
36 36 44								15.3	12.4	9.2	1.181	19.49	17.52	4.72	3.54	0.63	6	133
36 36 45								26.8	21.4	16.4	1.968	20.08	18.31	4.72	4.72	0.83	7	205

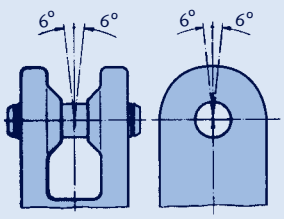

load angle ≤ 6°

① Calculation of intermediate values: linear interpolation.

② The connection load group is to be specified when ordering. On selection of a smaller load group than that shown in the table, the 'E' dimensions of the clamp are reduced (see table on page 3.15).

③ Shear lug dimensions: F minus 0.04inch [1mm]; B1 plus 0.08inch [2mm] (see page 3.44)

Dynamic clamps
Selection overview OD 14.50" – OD 16"

3

OD 14.50" [368mm] (ND 350/14")

	permissible load [lbs x 1000] ①										d_1	E_{max}					max ②	wt.
type	210	480	660	840	930	950	985	1040	1075	1110°F	②	②	A	B	B_1	F ③	load gr.	[lbs]
36 37 11	9.9	9.2	8.3								0.787	15.75	17.52	2.36	1.57	0.43	5	45
36 37 12	14.6	13.3	12.6								1.181	15.75	17.91	2.36	1.77	0.51	6	56
36 37 13	22.5	22.5	22.3								1.181	15.75	18.70	2.36	2.36	0.51	6	80
36 37 14	37.3	33.9	31.2								1.968	16.34	17.91	4.72	3.54	0.63	7	125
36 37 15	62.7	57.6	40.7								2.362	17.32	18.70	4.72	4.72	0.63	8	195
36 37 21			7.0	6.1	5.4						0.787	19.09	17.52	2.36	1.57	0.43	5	49
36 37 22			10.8	9.4	8.8						1.181	19.09	17.91	2.36	1.77	0.51	6	67
36 37 23			20.0	17.1	16.2						1.181	19.09	18.70	2.36	2.36	0.51	6	94
36 37 24			27.2	23.6	21.8						1.968	19.69	17.91	4.72	3.54	0.63	7	146
36 37 25			41.8	37.8	35.7						1.968	19.69	18.70	4.72	4.72	0.83	7	208
36 37 31					4.0	4.0	4.0	2.9			0.590	18.90	17.52	2.36	1.57	0.43	4	45
36 37 32					8.5	8.3	7.0	4.5			0.787	19.69	17.91	2.36	1.77	0.51	5	59
36 37 33					15.7	15.5	13.3	8.5			1.181	19.69	18.70	2.36	2.36	0.51	6	94
36 37 34					21.8	21.6	18.2	11.9			1.181	19.69	17.91	4.72	3.54	0.63	6	135
36 37 35		45.0	45.0	40.0	37.5	37.1	32.1	20.9			1.968	20.28	18.70	4.72	4.72	0.83	7	204
36 37 41								3.8	3.1	2.5	0.590	18.90	17.52	2.36	1.57	0.43	4	51
36 37 42								5.2	4.0	3.1	0.787	19.69	17.91	2.36	1.77	0.51	5	60
36 37 43								11.0	8.8	6.5	1.181	19.69	18.70	2.36	2.36	0.51	6	95
36 37 44								15.3	12.4	9.2	1.181	19.69	17.91	4.72	3.54	0.63	6	135
36 37 45								27.0	21.8	16.4	1.968	20.28	18.70	4.72	4.72	0.83	7	210

OD 16" [406.4mm] (ND 400/16")

	permissible load [lbs x 1000] ①										d_1	E_{max}					max ②	wt.
type	210	480	660	840	930	950	985	1040	1075	1110°F	②	②	A	B	B_1	F ③	load gr.	[lbs]
36 41 11	9.7	9.0	8.1								0.787	16.93	19.09	2.36	1.57	0.43	5	51
36 41 12	14.6	13.3	12.1								1.181	16.93	19.49	2.36	1.77	0.51	6	62
36 41 13	22.5	22.5	22.5								1.181	16.93	20.28	2.36	2.36	0.51	6	89
36 41 14	36.6	33.7	30.8								1.968	17.52	19.49	4.72	3.54	0.63	7	139
36 41 15	62.3	56.9	52.2								2.362	18.50	20.28	4.72	4.72	0.83	8	217
36 41 21			6.7	5.8	5.4						0.787	20.08	19.09	2.36	1.57	0.43	5	53
36 41 22			10.8	9.2	8.5						1.181	20.08	19.49	2.36	1.77	0.51	6	74
36 41 23			20.0	17.3	16.0						1.181	20.08	20.28	2.36	2.36	0.51	6	101
36 41 24			27.0	23.6	21.8						1.968	20.67	19.49	4.72	3.54	0.63	7	159
36 41 25			41.8	38.7	37.1						1.968	20.67	20.28	4.72	4.72	0.83	7	230
37 41 27	78.7	76.0	65.2	54.9	51.5						2.362	20.67	20.28	4.72	4.72	0.83	8	424
36 41 31					4.0	4.0	4.0	2.9			0.590	20.08	19.09	2.36	1.57	0.43	4	49
36 41 32					8.3	8.1	7.0	4.5			0.787	20.87	19.49	2.36	1.77	0.51	5	64
36 41 33					15.5	15.3	13.0	8.3			1.181	20.87	20.28	2.36	2.36	0.51	6	100
36 41 34					21.6	21.1	18.0	11.7			1.181	20.87	19.49	4.72	3.54	0.63	6	146
36 41 35					36.9	36.4	31.9	20.7			1.968	21.46	20.28	4.72	4.72	0.83	7	219
37 41 37					50.8	50.1	48.3	36.2			2.362	21.46	20.28	4.72	4.72	0.83	8	437
36 41 41								3.8	3.1	2.2	0.590	20.08	19.09	2.36	1.57	0.43	4	50
36 41 42								5.6	4.3	3.4	0.787	20.87	19.49	2.36	1.77	0.51	5	65
36 41 43								10.8	8.8	6.5	1.181	20.87	20.28	2.36	2.36	0.51	6	101
36 41 44								15.1	12.4	9.2	1.181	20.87	19.49	4.72	3.54	0.63	6	147
36 41 45								26.5	21.6	16.2	1.968	21.46	20.28	4.72	4.72	0.83	7	225
37 41 47		69.0	65.4	59.8	56.2	55.5	51.9	36.2	28.3	21.1	2.362	21.46	20.28	4.72	4.72	0.83	8	440

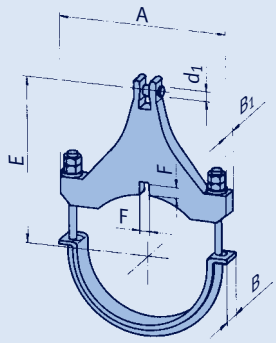

type 36 .. .1/2/3

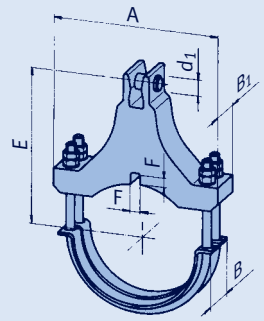

type 36 .. .4/5

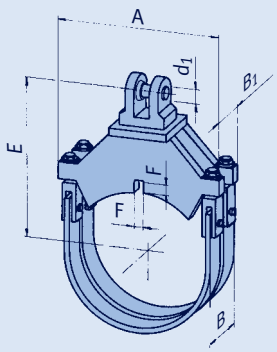

type 37 .. .7

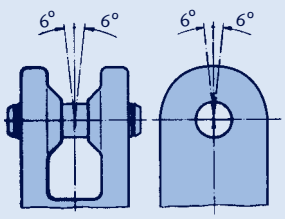

load angle ≤ 6°

① Calculation of intermediate values: linear interpolation.

② The connection load group is to be specified when ordering. On selection of a smaller load group than that shown in the table, the 'E' dimensions of the clamp are reduced (see table on page 3.15).

③ Shear lug dimensions: F minus 0.04inch [1mm]; B1 plus 0.08inch [2mm] (see page 3.44)

Dynamic clamps
Selection overview OD 16.50" – OD 18"

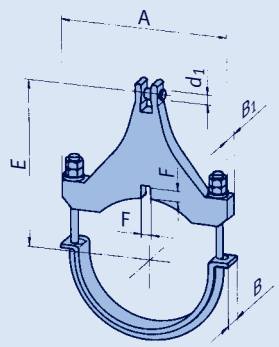

type 36 .. .1/2/3

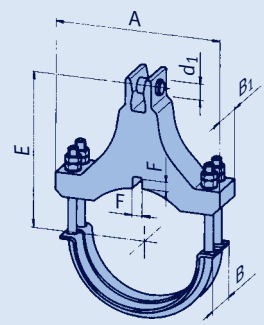

type 36 .. .4/5

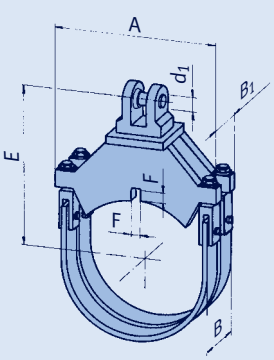

type 37 .. .7/8

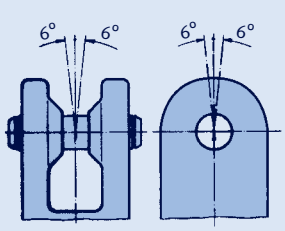

load angle ≤ 6°

OD 16.50" [419mm] (ND 400/16")

type	permissible load [lbs x 1000] ① 210	480	660	840	930	950	985	1040	1075	1110°F	d_1 ②	E_{max} ②	A	B	B_1	F ③	max load ②	gr.	wt. [lbs]
36 42 11	9.7	8.8	8.1								0.787	17.32	19.49	2.36	1.57	0.43	5		52
36 42 12	14.6	13.3	12.4								1.181	17.32	20.08	2.36	1.77	0.51	6		64
36 42 13	22.5	22.5	22.5								1.181	17.32	20.67	2.36	2.36	0.51	6		92
36 42 14	36.6	33.5	30.6								1.968	17.91	20.08	4.72	3.54	0.63	7		143
36 42 15	62.0	56.9	51.9								2.362	18.90	20.67	4.72	4.72	0.83	8		224
36 42 21			6.5	5.8	5.4						0.787	20.87	19.49	2.36	1.57	0.43	5		56
36 42 22			10.6	9.0	8.3						1.181	20.87	20.08	2.36	1.77	0.51	6		77
36 42 23			19.6	17.1	15.7						1.181	20.87	20.67	2.36	2.36	0.51	6		107
36 42 24			26.5	23.2	21.4						1.968	21.46	20.08	4.72	3.54	0.63	7		166
36 42 25			41.8	38.7	37.1						1.968	21.46	20.67	4.72	4.72	0.83	7		239
37 42 27	78.7	75.5	65.0	54.6	51.3						2.362	21.46	20.67	4.72	4.72	0.83	8		438
36 42 31					4.0	4.0	4.0	2.9			0.590	20.47	19.49	2.36	1.57	0.43	4		50
36 42 32					8.3	8.1	7.0	4.5			0.787	21.26	20.08	2.36	1.77	0.51	5		67
36 42 33					15.5	15.3	12.8	8.3			1.181	21.26	20.67	2.36	2.36	0.51	6		104
36 42 34					21.4	20.9	17.8	11.5			1.181	21.46	20.08	4.72	3.54	0.63	6		150
36 42 35					35.5	35.1	31.5	20.5			1.968	22.05	20.67	4.72	4.72	0.83	7		226
37 42 37					50.8	50.4	48.3	36.2			2.362	22.05	20.67	4.72	4.72	0.83	8		442
36 42 41								3.8	3.1	2.2	0.590	20.47	19.49	2.36	1.57	0.43	4		52
36 42 42								5.6	4.7	3.4	0.787	21.26	20.08	2.36	1.77	0.51	5		68
36 42 43								10.8	8.8	6.5	1.181	21.26	20.67	2.36	2.36	0.51	6		105
36 42 44								14.8	12.1	9.0	1.181	21.46	20.08	4.72	3.54	0.63	6		153
36 42 45								26.3	20.9	15.5	1.968	22.05	20.67	4.72	4.72	0.83	7		229
37 42 47		69.0	65.4	59.8	56.2	55.5	51.9	36.2	28.3	21.1	2.362	22.05	20.67	4.72	4.72	0.83	8		447

OD 18" [457.2mm] (ND 450/18")

type	permissible load [lbs x 1000] ① 210	480	660	840	930	950	985	1040	1075	1110°F	d_1 ②	E_{max} ②	A	B	B_1	F ③	max load ②	gr.	wt. [lbs]
36 46 11	9.4	8.5	7.9								0.787	18.50	21.06	2.36	1.57	0.51	5		57
36 46 12	14.6	13.3	12.4								1.181	18.50	21.46	2.36	1.77	0.51	6		73
36 46 13	22.5	22.5	22.5								1.181	18.50	22.24	2.36	2.36	0.51	6		103
36 46 14	36.0	33.0	30.1								1.968	19.09	21.46	4.72	3.54	0.63	7		158
36 46 15	61.4	56.2	51.5								2.362	20.08	22.24	4.72	4.72	0.83	8		245
36 46 21			6.5	5.8	5.4						0.787	21.65	21.06	2.36	1.57	0.51	5		60
36 46 22			10.3	9.0	8.3						1.181	21.65	21.46	2.36	1.77	0.51	6		83
36 46 23			19.6	17.1	15.7						1.181	21.65	22.24	2.36	2.36	0.51	6		116
36 46 24			25.9	22.5	20.7						1.968	23.03	21.46	4.72	3.54	0.63	7		183
36 46 25			41.8	38.7	37.1						1.968	23.03	22.24	4.72	4.72	0.83	7		261
37 46 27	78.7	75.5	65.0	54.4	51.3						2.362	23.03	22.24	4.72	4.72	0.83	8		463
36 46 31					4.0	4.0	4.0	2.9			0.590	21.65	21.06	2.36	1.57	0.51	4		55
36 46 32					8.1	7.9	6.7	4.3			0.787	22.44	21.46	2.36	1.77	0.51	5		74
36 46 33					15.3	14.8	12.6	8.3			1.181	22.44	22.24	2.36	2.36	0.51	6		114
36 46 34					20.9	20.7	17.5	11.5			1.181	22.64	21.46	4.72	3.54	0.63	6		161
36 46 35					37.3	36.6	31.2	20.2			1.968	23.23	22.24	4.72	4.72	0.83	7		252
37 46 37					50.6	49.9	48.1	36.0			2.362	23.23	22.24	4.72	4.72	0.83	8		474
37 46 38	123.6	113.3	97.3	81.8	76.9	75.8	72.2	50.1			2.755	23.23	22.24	4.72	4.72	1.02	9		642
36 46 41								3.6	2.9	2.2	0.590	21.65	21.06	2.36	1.57	0.51	4		57
36 46 42								5.6	4.5	3.4	0.787	26.57	21.65	13.39	9.84	0.51	5		76
36 46 43								10.6	8.5	6.5	1.181	26.57	21.65	13.39	9.84	0.51	6		116
36 46 44								14.6	11.9	9.0	1.181	26.57	21.65	13.39	9.84	0.63	6		164
36 46 45								26.1	21.1	15.7	1.968	26.57	21.65	13.39	9.84	0.83	7		254
37 46 47								36.0	28.1	21.1	2.362	25.00	21.26	12.20	9.06	0.83	8		478
37 46 48								50.1	38.2	28.1	2.755	26.57	21.65	13.39	9.84	1.02	9		649

① Calculation of intermediate values: linear interpolation.

② The connection load group is to be specified when ordering. On selection of a smaller load group than that shown in the table, the 'E' dimensions of the clamp are reduced (see table on page 3.15).

③ Shear lug dimensions: F minus 0.04inch [1mm]; B1 plus 0.08inch [2mm] (see page 3.44)

Dynamic clamps
Selection overview OD 20" - OD 22"

3

OD 20" [508mm] (ND 500/20")

	permissible load [lbs x 1000] ①										d_1	E_{max}					max ②	wt.
type	210	480	660	840	930	950	985	1040	1075	1110°F	②	②	A	B	B_1	F ③	load gr.	[lbs]
37 51 11	18.4	13.9	10.1								1.181	20.28	23.43	6.69	5.12	0.51	6	102
37 51 12	29.9	22.7	16.4								1.968	20.87	24.41	6.69	5.35	0.51	7	157
37 51 13	40.9	31.9	24.3								2.362	22.05	25.20	9.06	7.09	0.63	8	242
37 51 14	60.5	46.3	34.4								2.755	23.62	25.98	12.99	10.24	0.83	9	425
37 51 17	82.1	66.1	47.9								2.755	23.62	23.23	12.60	9.06	0.83	9	496
37 51 21			15.5	13.0	12.1						1.181	23.43	22.64	5.51	4.09	0.51	6	94
37 51 22			21.4	18.0	16.9						1.968	24.41	23.23	6.69	5.12	0.51	7	152
37 51 23			29.4	24.7	23.4						1.968	24.41	23.82	7.09	5.35	0.63	7	208
37 51 24			47.9	40.2	37.8						2.362	25.59	24.61	9.45	7.09	0.83	8	334
37 51 25			52.8	44.3	41.4						2.362	25.59	25.00	9.45	7.48	0.83	8	409
37 51 26	78.7	70.6	60.5	51.0	47.7						2.362	25.59	26.38	9.84	7.48	0.83	8	456
37 51 28	123.6	116.9	100.3	84.3	79.1						2.755	25.59	23.82	13.39	9.84	1.02	9	654
37 51 31					11.9	11.7	10.1	7.0			1.181	24.61	22.83	5.51	4.09	0.51	6	97
37 51 32					16.9	16.6	16.0	11.0			1.181	24.61	23.62	6.69	5.12	0.51	6	145
37 51 33					22.9	22.7	21.4	16.2			1.968	25.20	23.62	7.09	5.35	0.63	7	211
37 51 34					37.3	36.9	35.1	24.5			2.362	26.18	25.20	9.06	7.09	0.83	8	328
37 51 35					41.1	40.5	38.2	29.7			2.362	26.18	25.20	9.45	7.48	1.02	8	411
37 51 38					76.4	75.5	71.7	49.9			2.755	27.95	23.82	13.39	9.84	1.02	9	691
37 51 41								7.0	5.4	4.0	1.181	24.61	22.83	5.71	4.09	0.51	6	98
37 51 42								11.2	8.8	6.5	1.181	24.61	23.62	6.69	5.12	0.51	6	146
37 51 43								16.6	13.0	9.7	1.181	24.61	23.62	7.09	5.51	0.63	6	217
37 51 44								24.7	18.9	13.9	1.968	25.20	25.20	9.25	7.09	0.83	7	311
37 51 45								30.1	23.6	17.3	1.968	25.20	25.20	9.45	7.48	1.02	7	392
37 51 48	123.6	120.3	109.7	100.5	96.7	96.0	88.6	61.8	48.3	35.5	2.755	27.95	24.61	15.55	11.42	1.02	9	879

OD 22" [558.8mm] (ND 550/22")

	permissible load [lbs x 1000] ①										d_1	E_{max}					max ②	wt.
type	210	480	660	840	930	950	985	1040	1075	1110°F	②	②	A	B	B_1	F ③	load gr.	[lbs]
37 56 11	18.2	13.9	9.9								1.181	21.65	25.39	6.69	5.12	0.51	6	112
37 56 12	29.9	22.5	16.2								1.968	22.24	26.38	6.69	5.35	0.51	7	166
37 56 13	40.7	31.9	24.3								2.362	23.43	27.17	9.06	7.09	0.63	8	256
37 56 14	60.5	46.3	34.4								2.755	25.00	27.76	12.99	10.24	0.83	9	442
37 56 17	82.1	66.3	47.9								2.755	25.00	25.39	12.60	9.06	0.83	9	531
37 56 21			15.1	12.8	11.9						1.181	25.20	24.80	5.51	4.09	0.51	6	105
37 56 22			21.1	17.8	16.6						1.968	25.79	25.20	6.69	5.12	0.51	7	163
37 56 23			29.4	24.7	23.2						1.968	25.79	25.79	7.09	5.35	0.63	7	221
37 56 24			47.7	40.0	37.5						2.362	26.77	26.57	9.45	7.09	0.83	8	349
37 56 25			52.6	44.3	41.4						2.362	26.77	26.97	9.45	7.48	0.83	8	429
37 56 26	78.7	70.4	60.5	50.8	47.4						2.362	26.77	28.35	9.84	7.48	0.83	8	478
37 56 28	123.6	113.3	97.3	81.8	76.9						2.755	28.54	25.79	13.39	9.84	1.02	9	734
37 56 31					11.9	11.7	10.1	7.0			1.181	25.59	24.80	5.51	4.09	0.51	6	105
37 56 32					16.9	16.6	16.2	11.0			1.181	25.59	25.59	6.69	5.12	0.51	6	155
37 56 33					22.9	22.7	21.4	16.2			1.968	26.18	25.59	7.09	5.35	0.63	7	221
37 56 34					37.3	36.9	34.8	24.3			2.362	27.36	27.17	9.06	7.09	0.83	8	344
37 56 35					40.9	40.5	38.2	29.7			2.362	27.36	27.17	9.45	7.48	0.83	8	430
37 56 38					76.4	75.5	71.7	49.9			2.755	28.94	25.79	13.39	9.84	1.02	9	727
37 56 39	123.6	123.6	109.0	91.7	85.9	84.8	79.8	62.0			2.755	28.94	26.18	15.75	11.42	1.02	9	916
37 56 41								7.0	5.4	4.0	1.181	25.59	24.80	5.71	4.09	0.51	6	105
37 56 42								11.2	8.8	6.5	1.181	25.59	25.59	6.69	5.12	0.51	6	156
37 56 43								16.2	12.8	9.4	1.968	26.18	25.59	7.09	5.35	0.63	7	236
37 56 44								24.3	18.4	13.7	2.362	27.36	27.17	9.25	7.09	0.83	8	347
37 56 45								29.7	23.2	17.1	2.362	27.36	27.17	9.45	7.48	0.83	8	432
37 56 48								49.9	38.0	28.1	2.755	28.94	25.79	13.39	9.84	1.02	9	739
37 56 49		123.6	120.7	106.3	99.6	98.2	89.0	62.0	48.6	35.7	2.755	28.94	26.18	15.75	11.42	1.02	9	921

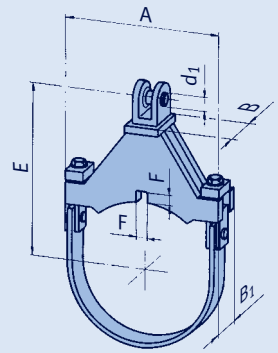

type 37 .. .1/2/3/4/5/6

① Calculation of intermediate values: linear interpolation.

② The connection load group is to be specified when ordering. On selection of a smaller load group than that shown in the table, the 'E' dimensions of the clamp are reduced (see table on page 3.15).

③ Shear lug dimensions: F minus 0.04inch [1mm]; B_1 plus 0.08inch [2mm] (see page 3.44).

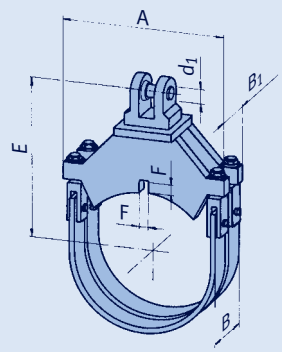

type 37 .. .7/8/9

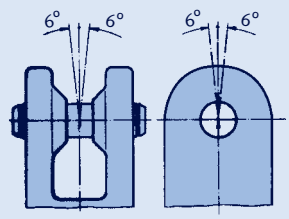

load angle ≤ 6°

Dynamic clamps
Selection overview OD 24" – OD 26"

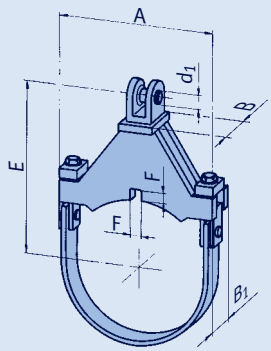

type 37 .. .1/2/3/4/5/6

① Calculation of intermediate values: linear interpolation.

② The connection load group is to be specified when ordering. On selection of a smaller load group than that shown in the table, the 'E' dimensions of the clamp are reduced (see table on page 3.15).

③ Shear lug dimensions: F minus 0.04inch [1mm]; B_1 plus 0.08inch [2mm] (see page 3.44).

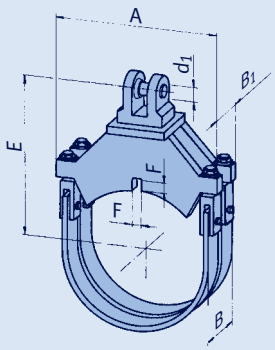

type 37 .. .7/8/9

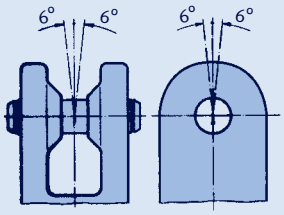

load angle ≤ 6°

OD 24" [609.6mm] (ND 600/24")

type	permissible load [lbs x 1000] ① 210	480	660	840	930	950	985	1040	1075	1110°F	d_1 ②	E_{max} ②	A	B	B_1	F ③	max load gr. ②	wt. [lbs]
37 61 11	18.4	13.9	10.1								1.181	22.64	27.56	6.69	5.12	0.63	6	118
37 61 12	28.8	22.7	16.4								1.968	23.23	28.35	7.09	5.35	0.63	7	175
37 61 13	40.9	32.1	24.3								2.362	24.41	29.13	9.06	7.09	0.63	8	267
37 61 14	61.1	46.3	34.8								2.755	25.98	29.92	12.99	10.24	0.63	9	456
37 61 17	82.7	66.8	48.1								2.755	25.98	27.36	12.60	9.06	0.83	9	557
37 61 18	122.1	92.6	66.8								2.755	25.98	27.76	13.19	9.84	0.83	9	664
37 61 21			15.1	12.8	11.9						1.181	26.38	26.77	5.51	4.09	0.63	6	113
37 61 22			21.1	17.8	16.9						1.968	26.97	27.17	6.69	5.12	0.63	7	174
37 61 23			29.4	24.7	23.2						1.968	26.97	27.76	7.09	5.35	0.63	7	232
37 61 24			47.4	39.8	37.5						2.362	28.15	28.54	9.45	7.09	0.83	8	369
37 61 25			52.4	44.1	41.1						2.362	28.15	28.94	9.45	7.48	0.83	8	451
37 61 26			60.2	50.6	47.4						2.362	28.15	30.31	9.84	7.48	0.83	8	501
37 61 28	123.6	112.6	96.7	81.4	76.4						2.755	29.92	27.76	13.39	9.84	1.02	9	783
37 61 31					11.7	11.7	10.1	6.7			1.181	26.97	26.77	5.51	4.09	0.63	6	115
37 61 32					16.9	16.6	16.0	11.0			1.181	26.97	27.56	6.69	5.12	0.63	6	167
37 61 33					22.9	22.5	21.4	16.2			1.968	27.56	27.56	7.09	5.35	0.63	7	233
37 61 34					36.9	36.6	34.6	24.3			2.362	28.74	29.13	9.06	7.09	0.83	8	364
37 61 35					40.7	40.2	38.2	29.4			2.362	28.74	29.13	9.45	7.48	0.83	8	453
37 61 38					76.0	75.1	71.3	49.7			2.755	30.31	27.76	13.39	9.84	1.02	9	776
37 61 39	123.6	123.6	108.6	91.3	85.4	84.3	79.8	61.8			2.755	30.31	28.35	15.75	11.42	1.02	9	978
37 61 41								7.0	5.4	4.0	1.181	26.97	26.77	5.71	4.09	0.63	6	115
37 61 42								11.2	8.8	6.5	1.181	26.97	27.56	6.69	5.12	0.63	6	168
37 61 43								16.2	12.6	9.4	1.968	27.56	27.56	7.09	5.35	0.63	7	250
37 61 44								24.3	18.4	13.5	2.362	28.74	29.13	9.25	7.09	0.83	8	366
37 61 45								29.4	22.9	16.9	2.362	28.74	29.13	9.45	7.48	0.83	8	455
37 61 48		123.6	119.8	105.9	98.9	97.8	88.6	61.8	48.1	35.5	2.755	30.31	28.35	15.75	11.42	1.02	9	987
37 61 49						96.0	93.5	77.8	60.2	47.0	2.755	30.31	28.74	17.13	13.39	1.02	9	1143

OD 26" [660.4mm] (ND 650/26")

type	permissible load [lbs x 1000] ① 210	480	660	840	930	950	985	1040	1075	1110°F	d_1 ②	E_{max} ②	A	B	B_1	F ③	max load gr. ②	wt. [lbs]
37 66 11	18.4	13.9	10.1								1.181	23.82	29.53	6.69	5.12	0.63	6	121
37 66 12	28.6	22.7	16.4								1.968	24.41	30.31	7.28	5.35	0.63	7	187
37 66 13	40.9	32.1	24.5								2.362	25.59	31.10	9.06	7.09	0.63	8	278
37 66 14	61.1	46.3	34.8								2.755	27.17	31.89	12.99	10.24	0.63	9	472
37 66 17	83.0	67.0	48.3								2.755	27.17	29.33	12.60	9.06	0.83	9	590
37 66 18	122.5	92.8	67.0								2.755	27.17	29.72	13.19	9.84	0.83	9	700
37 66 21			15.5	13.0	12.4						1.181	27.56	28.74	5.71	4.33	0.63	6	129
37 66 22			21.6	18.2	17.1						1.968	28.15	29.33	6.89	5.35	0.63	7	199
37 66 23			29.4	24.7	23.2						1.968	28.15	29.92	7.09	5.35	0.63	7	243
37 66 24			47.4	39.8	37.3						2.362	29.53	30.51	9.45	7.09	0.83	8	389
37 66 25			52.4	44.1	41.1						2.362	29.53	30.91	9.45	7.48	0.83	8	475
37 66 26			60.0	50.6	47.2						2.362	29.53	32.28	9.84	7.48	0.83	8	527
37 66 28	123.6	112.4	96.4	81.2	76.2						2.755	31.10	29.72	13.39	9.84	1.02	9	833
37 66 31					12.1	11.9	10.3	7.0			1.181	28.15	28.74	5.71	4.33	0.63	6	132
37 66 32					17.1	16.9	16.4	11.2			1.181	28.15	29.72	6.89	5.35	0.63	6	195
37 66 33					22.9	22.7	21.4	16.2			1.968	28.74	29.72	7.09	5.35	0.63	7	245
37 66 34					37.3	36.9	34.8	24.3			2.362	29.72	31.10	9.06	7.09	0.83	8	379
37 66 35					40.9	40.5	38.2	29.7			2.362	29.72	31.10	9.45	7.48	0.83	8	474
37 66 38					76.0	75.1	71.3	49.7			2.755	31.30	29.72	13.39	9.84	1.02	9	820
37 66 39	123.6	123.6	108.6	91.3	85.4	84.3	79.8	61.8			2.755	31.30	30.31	15.75	11.42	1.02	9	1027
37 66 41								7.2	5.6	4.0	1.181	28.15	28.74	5.71	4.33	0.63	6	133
37 66 42								11.5	8.8	6.7	1.181	28.15	29.72	7.09	5.35	0.63	6	213
37 66 43								16.2	12.6	9.4	1.968	28.74	29.72	7.09	5.35	0.63	7	263
37 66 44								24.3	18.4	13.7	2.362	29.72	31.10	9.25	7.09	0.83	8	381
37 66 45								29.7	23.2	17.1	2.362	29.72	31.10	9.45	7.48	0.83	8	473
37 66 48		120.3	109.7	100.5	96.7	96.0	88.6	61.8	48.3	35.5	2.755	31.30	30.31	15.75	11.42	1.02	9	1033
37 66 49						96.0	93.5	77.8	60.2	47.0	2.755	31.30	30.71	17.13	13.39	1.02	9	1195

Dynamic clamps
Selection overview OD 28" - OD 30"

OD 28" [711.2mm] (ND 700/28")

	permissible load [lbs x 1000] ①																		
type	210	480	660	840	930	950	985	1040	1075	1110°F	d_1 ②	E_{max} ②	A	B	B_1	F ③	max load gr. ②	wt. [lbs]
37 71 11	18.4	13.9	10.1								1.181	25.00	31.50	6.69	5.12	0.63	6	129
37 71 12	28.3	22.7	16.4								1.968	25.59	32.48	7.48	5.35	0.63	7	200
37 71 13	40.9	32.1	24.5								2.362	26.77	33.07	9.06	7.09	0.63	8	292
37 71 14	61.1	46.3	35.1								2.755	28.35	33.86	12.99	10.24	0.63	9	486
37 71 15	73.7	56.9	41.8								2.755	28.35	34.65	13.98	10.24	0.83	9	554
37 71 18	122.7	93.1	67.2								2.755	28.35	31.89	13.19	9.84	0.83	9	732
37 71 21			15.5	13.0	12.4						1.181	28.54	30.71	5.71	4.33	0.63	6	136
37 71 22			21.6	18.2	17.1						1.968	29.33	31.30	6.89	5.35	0.63	7	201
37 71 23			29.4	24.7	23.2						1.968	29.33	31.89	7.09	5.35	0.63	7	257
37 71 24			47.9	40.2	37.8						2.362	30.31	32.68	9.45	7.09	0.83	8	397
37 71 25			52.8	44.5	41.6						2.362	30.31	33.07	9.45	7.48	0.83	8	491
37 71 26			60.7	51.0	47.9						2.362	30.31	34.45	9.84	7.48	0.83	8	547
37 71 28	123.6	113.1	97.1	81.6	76.7						2.755	32.09	31.89	13.39	9.84	1.02	9	863
37 71 31					12.1	11.9	10.3	7.0			1.181	29.13	30.71	5.71	4.33	0.63	6	137
37 71 32					17.1	16.9	16.4	11.2			1.181	29.13	31.69	6.89	5.35	0.63	6	207
37 71 33					22.9	22.7	21.4	16.4			1.968	29.72	31.69	7.09	5.35	0.63	7	257
37 71 34					37.5	37.1	35.1	24.5			2.362	30.71	33.27	9.06	7.09	0.83	8	391
37 71 35					41.1	40.7	38.2	29.9			2.362	30.71	33.27	9.45	7.48	0.83	8	495
37 71 38					76.0	75.1	71.3	49.7			2.755	32.48	31.89	13.39	9.84	1.02	9	856
37 71 39	123.6	123.6	108.8	91.5	85.7	84.5	79.8	61.8			2.755	32.48	32.28	15.75	11.42	1.02	9	1080
37 71 41								7.2	5.6	4.0	1.181	29.13	30.71	5.71	4.33	0.63	6	137
37 71 42								11.5	9.0	6.7	1.181	29.13	31.69	7.09	5.35	0.63	6	226
37 71 43								16.4	12.8	9.7	1.968	29.72	31.69	7.09	5.35	0.63	7	277
37 71 44								24.5	18.7	13.7	2.362	30.71	33.27	9.25	7.09	0.83	8	394
37 71 45								29.9	23.2	17.1	2.362	30.71	33.27	9.45	7.48	0.83	8	493
37 71 48		123.6	123.6	109.3	102.3	100.9	91.5	63.8	49.9	36.6	2.755	30.91	32.28	15.75	11.42	1.02	9	1031
37 71 49						96.0	93.5	78.0	60.5	47.2	2.755	32.48	32.87	17.13	13.39	1.02	9	1269

OD 30" [762mm] (ND 750/30")

	permissible load [lbs x 1000] ①																		
type	210	480	660	840	930	950	985	1040	1075	1110°F	d_1 ②	E_{max} ②	A	B	B_1	F ③	max load gr. ②	wt. [lbs]
37 76 11	18.4	13.9	9.9								1.181	26.18	33.46	6.69	5.12	0.63	6	138
37 76 12	28.3	22.7	16.4								1.968	26.77	34.45	7.48	5.35	0.63	7	210
37 76 13	40.9	32.1	24.5								2.362	27.95	35.24	9.25	7.09	0.63	8	308
37 76 14	64.1	48.6	35.1								2.755	29.53	35.83	12.99	10.24	0.63	9	508
37 76 15	74.0	56.4	42.0								2.755	29.53	36.61	13.58	10.24	0.83	9	579
37 76 16	91.5	69.2	52.4								2.755	29.53	36.81	14.57	10.24	0.83	9	672
37 76 18	123.0	93.1	67.2								2.755	29.53	33.86	13.19	9.84	0.83	9	772
37 76 21			15.5	12.8	12.1						1.181	29.92	32.87	5.71	4.33	0.63	6	145
37 76 22			21.6	18.2	17.1						1.968	30.51	33.27	6.89	5.35	0.63	7	212
37 76 23			29.4	24.7	23.2						1.968	30.51	33.86	7.09	5.35	0.63	7	271
37 76 24			47.9	40.2	37.8						2.362	31.50	34.65	9.45	7.09	0.83	8	411
37 76 26			60.9	51.3	47.9						2.362	31.50	36.42	9.84	7.48	0.83	8	571
37 76 28	123.6	113.3	97.3	81.8	76.9						2.755	33.27	33.86	13.39	9.84	1.02	9	908
37 76 31					12.1	11.9	10.3	7.0			1.181	30.12	32.87	5.71	4.33	0.63	6	146
37 76 32					17.3	17.1	16.4	11.5			1.181	30.12	33.66	6.89	5.35	0.63	6	206
37 76 33					23.2	22.9	21.4	16.4			1.968	30.71	33.66	7.09	5.35	0.63	7	270
37 76 34					37.8	37.3	35.3	24.7			2.362	31.69	35.24	9.06	7.09	0.83	8	407
37 76 35					41.6	40.9	38.2	29.9			2.362	31.69	35.24	9.45	7.48	0.83	8	511
37 76 38					76.7	75.5	71.9	50.1			2.755	33.46	33.86	13.39	9.84	1.02	9	894
37 76 39	123.6	123.6	109.5	92.2	86.1	85.0	79.8	62.3			2.755	33.46	34.25	15.75	11.42	1.02	9	1126
37 76 41								7.2	5.6	4.0	1.181	30.12	32.87	5.71	4.33	0.63	6	146
37 76 42								11.7	9.0	6.7	1.181	30.12	33.66	7.09	5.51	0.63	6	226
37 76 43								16.6	13.0	9.7	1.968	30.71	33.66	7.09	5.51	0.63	7	292
37 76 44								24.7	18.7	13.7	2.362	31.69	35.24	9.25	7.09	0.83	8	407
37 76 45								29.9	23.4	17.3	2.362	31.69	35.24	9.45	7.48	0.83	8	511
37 76 48		123.6	120.9	106.8	99.8	98.7	89.5	62.3	48.6	36.0	2.755	33.46	34.25	15.75	11.42	1.02	9	1137
37 76 49						96.0	93.5	78.5	60.9	47.4	2.755	33.46	34.84	17.13	13.39	1.02	9	1306

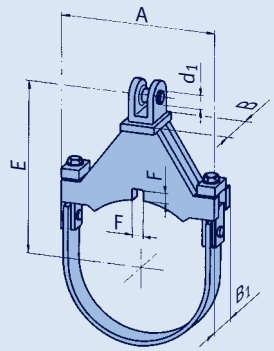

type 37 .. .1/2/3/4/5/6

① Calculation of intermediate values: linear interpolation.

② The connection load group is to be specified when ordering. On selection of a smaller load group than that shown in the table, the 'E' dimensions of the clamp are reduced (see table on page 3.15).

③ Shear lug dimensions: F minus 0.04inch [1mm]; B_1 plus 0.08inch [2mm] (see page 3.44).

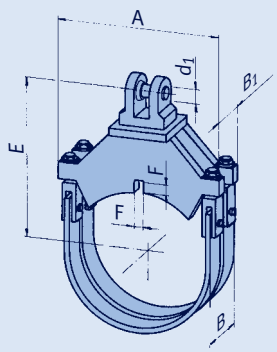

type 37 .. .8/9

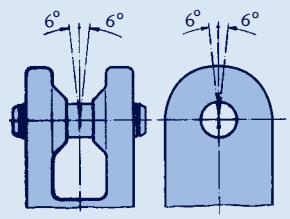

load angle ≤ 6°

Dynamic clamps
Selection overview OD 32" – OD 34"

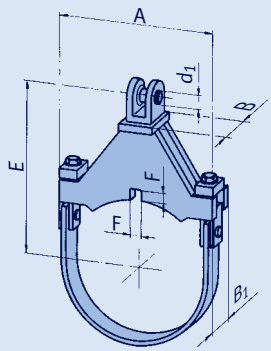

type 37 .. .1/2/3/4/5/6

① Calculation of intermediate values: linear interpolation.

② The connection load group is to be specified when ordering. On selection of a smaller load group than that shown in the table, the 'E' dimensions of the clamp are reduced (see table on page 3.15).

③ Shear lug dimensions: F minus 0.04inch [1mm]; B_1 plus 0.08inch [2mm] (see page 3.44).

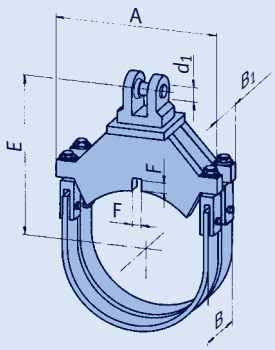

type 37 .. .8/9

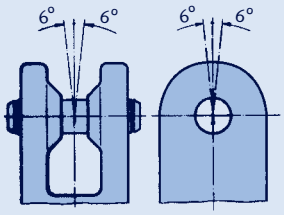

load angle ≤ 6°

OD 32" [812.8mm] (ND 800/32")

	permissible load [lbs x 1000] ①																	
type	210	480	660	840	930	950	985	1040	1075	1110°F	d_1 ②	E_{max} ②	A	B	B_1	F ③	max load ② gr.	wt. [lbs]
37 81 11	17.1	13.3	9.4								1.181	27.56	35.63	6.69	5.12	0.63	6	142
37 81 12	28.3	22.5	16.2								1.968	28.15	36.42	7.28	5.35	0.63	7	217
37 81 13	41.1	32.1	24.3								2.362	29.33	37.40	9.25	7.09	0.63	8	313
37 81 14	63.8	48.3	34.8								2.755	30.91	37.80	12.99	10.24	0.63	9	529
37 81 15	73.7	55.8	41.8								2.755	30.91	38.78	13.58	10.24	0.83	9	601
37 81 16	89.7	69.0	52.4								2.755	30.91	38.78	14.57	10.24	0.83	9	696
37 81 18	122.5	92.8	67.0								2.755	30.91	35.83	13.19	9.84	0.83	9	822
37 81 21			15.5	13.0	12.1						1.181	31.10	34.84	5.71	4.33	0.63	6	154
37 81 22			21.6	18.2	17.1						1.968	31.69	35.24	6.89	5.35	0.63	7	235
37 81 23			29.4	24.7	23.2						1.968	31.69	35.83	7.09	5.35	0.63	7	282
37 81 24			48.1	40.5	38.0						2.362	32.68	36.61	9.45	7.09	0.83	8	432
37 81 26			60.9	51.3	47.9						2.362	32.68	38.39	9.84	7.48	0.83	8	595
37 81 28	123.6	113.5	97.6	82.1	77.1						2.755	34.45	35.83	13.39	9.84	1.02	9	957
37 81 31					12.1	12.1	10.3	7.2			1.181	31.10	34.84	5.71	4.33	0.63	6	153
37 81 32					17.3	17.1	16.6	11.5			1.181	31.10	35.63	6.89	5.35	0.63	6	227
37 81 33					23.2	22.9	21.4	16.0			1.968	31.69	35.63	7.09	5.35	0.63	7	280
37 81 34					38.0	37.5	35.5	24.1			2.362	32.68	37.20	9.06	7.09	0.83	8	423
37 81 35					41.8	41.1	38.2	30.1			2.362	32.68	37.20	9.45	7.48	0.83	8	529
37 81 38					77.1	76.0	72.2	50.4			2.755	34.45	35.83	13.39	9.84	1.02	9	936
37 81 39	123.6	123.6	110.2	92.6	86.6	85.7	80.9	62.7			2.755	34.45	36.22	15.75	11.42	1.02	9	1169
37 81 41								7.2	5.6	4.3	1.181	31.10	34.84	5.71	4.33	0.63	6	153
37 81 42								11.7	9.0	6.7	1.181	31.10	35.63	7.09	5.51	0.63	6	249
37 81 43								16.6	13.0	9.7	1.968	31.69	35.63	7.09	5.51	0.63	7	302
37 81 44								24.7	18.9	13.9	2.362	32.68	37.20	9.84	7.09	0.83	8	432
37 81 45								30.1	23.6	17.3	2.362	32.68	37.20	10.63	7.48	0.83	8	536
37 81 48		123.6	121.6	107.5	100.5	99.1	89.9	62.7	48.8	36.0	2.755	34.45	36.22	15.75	11.42	1.02	9	1182
37 81 49						96.0	93.5	78.9	61.4	47.9	2.755	34.45	36.81	17.13	13.39	1.02	9	1377

OD 34" [863.6mm] (ND 850/34")

	permissible load [lbs x 1000] ①																	
type	210	480	660	840	930	950	985	1040	1075	1110°F	d_1 ②	E_{max} ②	A	B	B_1	F ③	max load ② gr.	wt. [lbs]
37 86 11	17.8	13.7	9.7								1.181	28.54	37.60	6.10	5.12	0.63	6	157
37 86 12	28.1	22.5	16.2								1.968	29.13	38.58	6.69	5.35	0.63	7	243
37 86 13	40.2	32.1	24.5								2.362	30.31	38.98	8.46	7.09	0.63	8	342
37 86 14	62.3	48.6	35.1								2.755	31.89	39.96	11.61	10.24	0.63	9	542
37 86 15	71.3	55.8	42.0								2.755	31.89	40.75	11.61	10.24	0.83	9	621
37 86 16	87.0	69.0	52.4								2.755	32.09	40.94	12.01	10.24	0.83	9	725
37 86 18	116.5	93.3	67.4								2.755	31.89	37.99	13.19	9.84	0.83	9	876
37 86 21			15.5	13.0	12.4						1.181	32.09	36.81	5.71	4.33	0.63	6	166
37 86 22			21.6	18.2	17.1						1.968	32.68	37.40	7.09	5.35	0.63	7	262
37 86 23			29.7	25.0	23.4						1.968	32.68	37.99	7.87	5.35	0.63	7	313
37 86 24			48.3	40.7	38.2						2.362	33.66	38.78	10.24	7.09	0.83	8	465
37 86 26			61.4	51.5	48.1						2.362	33.66	40.55	9.45	7.48	0.83	8	653
37 86 28	123.6	114.4	98.2	82.5	77.6						2.755	35.43	37.99	13.39	9.84	1.02	9	1040
37 86 31					12.4	12.1	10.6	7.2			1.181	32.09	36.81	5.71	4.33	0.63	6	162
37 86 32					17.3	17.1	16.6	11.5			1.181	32.09	37.80	7.09	5.35	0.63	6	255
37 86 33					23.4	23.2	21.4	16.2			1.968	32.68	37.80	7.09	5.35	0.63	7	308
37 86 34					38.2	37.8	35.7	24.7			2.362	33.66	39.37	9.25	7.09	0.83	8	463
37 86 35					42.0	41.4	38.2	30.3			2.362	33.66	39.37	9.25	7.48	0.83	8	579
37 86 38					77.6	76.7	72.6	50.6			2.755	35.43	37.99	13.39	9.84	1.02	9	1024
37 86 39	123.6	123.6	110.8	93.3	87.2	86.1	80.9	63.2			2.755	35.43	38.39	15.75	11.42	1.02	9	1268
37 86 41								7.2	5.6	4.3	1.181	32.09	36.81	5.71	4.33	0.63	6	162
37 86 42								11.7	9.2	7.0	1.181	32.09	37.80	7.09	5.51	0.63	6	279
37 86 43								16.6	13.0	9.9	1.968	32.68	37.80	7.09	5.51	0.63	7	332
37 86 44								25.0	18.9	13.9	2.362	33.66	39.37	9.84	7.09	0.83	8	462
37 86 45								30.3	23.6	17.5	2.362	33.66	39.37	10.63	7.48	0.83	8	580
37 86 48		123.6	122.5	108.1	101.2	99.8	90.6	63.2	49.2	36.4	2.755	35.43	38.39	15.75	11.42	1.02	9	1271
37 86 49						96.0	93.5	79.4	61.6	48.1	2.755	35.43	38.98	17.13	13.39	1.02	9	1472

Dynamic clamps
Selection overview OD 36" – OD 38"

3

OD 36" [914.4mm] (ND 900/36")

	permissible load [lbs x 1000] ①										d_1	E_{max}					max ②	wt.
type	210	480	660	840	930	950	985	1040	1075	1110°F	②	②	A	B	B_1	F ③	load gr.	[lbs]
37 91 11	16.9	13.7	9.7								1.181	29.92	39.57	7.09	5.12	0.63	6	159
37 91 12	27.2	22.5	16.2								1.968	30.51	40.55	7.28	5.35	0.63	7	240
37 91 13	40.7	32.1	24.3								2.362	31.69	41.14	9.84	7.09	0.63	8	344
37 91 14	64.1	48.6	35.1								2.755	33.27	41.93	12.99	10.24	0.63	9	551
37 91 15	74.0	55.8	41.8								2.755	33.27	42.72	14.37	10.24	0.83	9	645
37 91 16	89.9	67.7	52.4								2.755	33.27	42.91	15.35	10.24	0.83	9	750
37 91 18	122.3	92.8	67.2								2.755	33.27	39.96	13.19	9.84	0.83	9	877
37 91 21			15.5	13.0	12.4						1.181	33.07	38.78	5.71	4.33	0.63	6	167
37 91 22			21.8	18.2	17.3						1.968	33.66	39.37	6.89	5.35	0.63	7	259
37 91 23			29.7	25.0	23.4						1.968	33.66	39.96	8.66	5.35	0.63	7	316
37 91 24			48.6	40.7	38.2						2.362	34.65	40.75	9.45	7.09	0.83	8	463
37 91 26			61.6	51.7	48.3						2.362	34.65	42.52	9.84	7.48	0.83	8	645
37 91 28	123.6	114.9	98.5	82.7	77.8						2.755	36.42	39.96	13.39	9.84	1.02	9	1039
37 91 29	123.6	123.6	111.3	93.5	87.7						2.755	36.42	40.35	15.75	11.42	1.02	9	1278
37 91 31					12.1	11.9	10.3	7.2			1.181	33.46	38.78	5.71	4.33	0.63	6	168
37 91 32					17.3	17.1	16.6	11.5			1.181	33.46	39.76	6.89	5.35	0.63	6	255
37 91 33					23.2	22.9	21.4	15.3			1.968	34.06	39.76	7.09	5.35	0.63	7	309
37 91 34					38.2	37.8	35.1	21.8			2.362	34.65	41.34	9.06	7.09	0.83	8	449
37 91 35					42.0	41.6	38.2	30.3			2.362	34.65	41.34	9.45	7.48	0.83	8	566
37 91 38					77.1	76.2	72.4	50.6			2.755	36.81	39.96	13.39	9.84	1.02	9	1030
37 91 39					87.0	85.9	80.9	62.9			2.755	36.81	40.35	15.75	11.42	1.02	9	1294
37 91 41								7.2	5.6	4.0	1.181	33.46	38.78	5.71	4.33	0.63	6	169
37 91 42								11.7	9.0	6.7	1.181	33.46	39.76	7.09	5.51	0.63	6	281
37 91 43								16.6	13.0	9.7	1.968	34.06	39.76	7.09	5.51	0.63	7	333
37 91 44								25.0	18.9	13.9	2.362	34.65	41.34	10.24	7.09	0.83	8	468
37 91 45								30.3	23.8	17.5	2.362	34.65	41.34	12.60	7.48	0.83	8	600
37 91 48		123.6	122.3	107.7	100.9	99.6	90.4	62.9	49.2	36.2	2.755	36.81	40.35	15.75	11.42	1.02	9	1299
37 91 49						96.0	93.5	79.4	61.6	48.1	2.755	36.81	40.94	17.13	13.39	1.02	9	1521

OD 38" [965.2mm] (ND 950/38")

	permissible load [lbs x 1000] ①										d_1	E_{max}					max ②	wt.
type	210	480	660	840	930	950	985	1040	1075	1110°F	②	②	A	B	B_1	F ③	load gr.	[lbs]
37 97 11	16.9	13.0	9.2								1.181	30.91	41.54	6.10	5.12	0.63	6	171
37 97 12	28.8	23.2	16.6								1.968	31.50	42.52	7.09	5.91	0.63	7	267
37 97 13	40.7	32.8	25.0								2.362	32.68	42.91	9.06	7.68	0.63	8	385
37 97 14	62.3	48.6	35.1								2.755	34.25	43.90	11.61	10.24	0.63	9	586
37 97 15	73.7	56.0	42.0								2.755	34.25	44.69	11.42	10.24	0.83	9	666
37 97 16	87.0	72.8	52.6								2.755	34.25	44.88	11.61	10.24	0.83	9	780
37 97 18	116.5	93.3	67.4								2.755	34.25	41.93	13.19	9.84	0.83	9	963
37 97 21			15.5	13.3	12.4						1.181	34.06	40.94	5.71	4.33	0.63	6	187
37 97 22			22.5	18.9	17.8						1.968	34.65	41.73	7.09	5.75	0.63	7	274
37 97 23			32.4	26.8	25.4						1.968	34.65	42.52	8.86	7.32	0.63	7	349
37 97 24			50.6	41.8	39.8						2.362	35.63	42.91	9.84	8.07	0.83	8	508
37 97 26			66.3	55.5	52.2						2.362	35.63	44.49	11.81	9.84	0.83	8	707
37 97 28	123.6	115.3	98.9	83.2	78.2						2.755	37.40	41.93	13.39	9.84	1.02	9	1125
37 97 29	123.6	123.6	112.0	94.0	87.9						2.755	37.40	42.32	15.75	11.42	1.02	9	1358
37 97 31					11.5	11.5	10.8	7.4			1.181	34.45	40.94	5.71	4.72	0.63	6	187
37 97 32					17.8	17.5	17.1	11.7			1.181	34.45	41.73	7.09	5.75	0.63	6	269
37 97 33					25.9	25.4	23.6	15.1			1.968	35.04	42.52	8.86	7.32	0.63	7	348
37 97 34					38.2	37.8	37.3	22.0			2.362	35.63	43.50	9.45	8.07	0.83	8	497
37 97 35					45.4	44.7	41.6	31.5			2.362	35.63	44.29	11.61	9.84	0.83	8	662
37 97 38					77.6	76.7	72.8	50.8			2.755	37.80	41.93	13.39	9.84	1.02	9	1121
37 97 39		123.6	115.1	96.9	90.6	89.5	85.4	65.6			2.755	37.80	42.32	17.32	12.99	1.02	9	1378
37 97 41								7.4	5.8	4.3	1.181	34.45	40.94	5.71	4.72	0.63	6	187
37 97 42								11.9	9.2	7.0	1.181	34.45	42.52	7.09	5.91	0.63	6	298
37 97 43								18.4	14.4	10.8	1.968	35.04	42.52	8.86	7.48	0.63	7	375
37 97 44								25.9	19.8	14.6	2.362	35.63	43.31	9.45	8.07	0.83	8	489
37 97 45								32.8	25.6	18.9	2.362	35.63	44.09	11.61	9.84	0.83	8	651
37 97 48		123.6	122.7	108.4	101.2	100.0	90.6	63.2	49.5	36.4	2.755	37.80	42.32	15.75	11.42	1.02	9	1367
37 97 49						96.0	93.5	79.6	61.8	48.3	2.755	37.80	42.91	17.13	13.39	1.02	9	1528

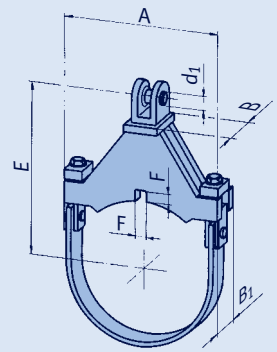

type 37 .. .1/2/3/4/5/6

① Calculation of intermediate values: linear interpolation.

② The connection load group is to be specified when ordering. On selection of a smaller load group than that shown in the table, the 'E' dimensions of the clamp are reduced (see table on page 3.15).

③ Shear lug dimensions: F minus 0.04inch [1mm]; B_1 plus 0.08inch [2mm] (see page 3.44).

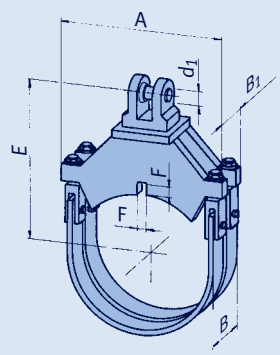

type 37 .. .8/9

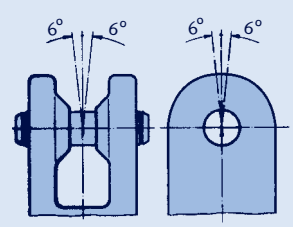

load angle ≤ 6°

Dynamic clamps
Selection overview OD 40" – OD 42"

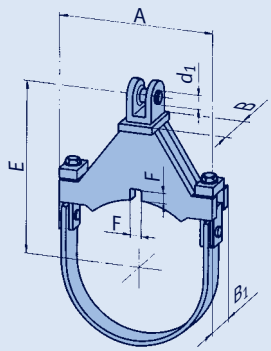

type 37 .. .1/2/3/4/5/6

① Calculation of intermediate values: linear interpolation.

② The connection load group is to be specified when ordering. On selection of a smaller load group than that shown in the table, the 'E' dimensions of the clamp are reduced (see table on page 3.15).

③ Shear lug dimensions: F minus 0.04inch [1mm]; B_1 plus 0.08inch [2mm] (see page 3.44).

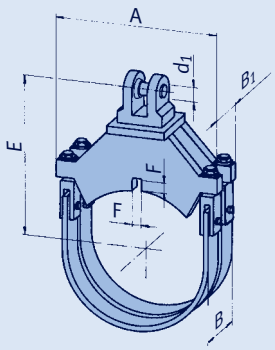

type 37 .. .8/9

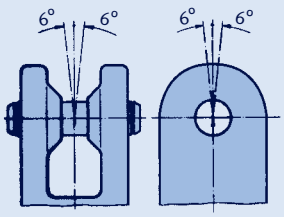

load angle ≤ 6°

OD 40" [1016mm] (ND 1000/40")

type	permissible load [lbs x 1000] ① 210	480	660	840	930	950	985	1040	1075	1110°F	d_1 ②	E_{max} ②	A	B	B_1	F ③	max load ② gr.	wt. [lbs]
37 T0 11	17.3	13.3	9.4								1.181	31.89	43.70	6.50	5.12	0.63	6	184
37 T0 12	27.0	22.9	16.6								1.968	32.48	44.49	7.09	5.91	0.63	7	267
37 T0 13	40.9	31.9	25.0								2.362	33.66	44.88	9.06	7.68	0.63	8	399
37 T0 14	63.2	48.8	35.3								2.755	35.24	45.87	11.61	10.24	0.63	9	597
37 T0 15	72.6	56.2	42.3								2.755	35.24	46.65	11.61	10.24	0.83	9	676
37 T0 16	87.0	73.7	53.3								2.755	35.24	46.85	12.01	10.63	0.83	9	817
37 T0 18	116.5	93.5	67.7								2.755	35.24	43.90	13.19	9.84	0.83	9	977
37 T0 21			15.7	13.3	12.4						1.181	35.04	42.91	5.71	4.33	0.63	6	190
37 T0 22			22.5	18.9	17.8						1.968	35.63	43.70	7.09	5.75	0.63	7	274
37 T0 23			31.7	26.3	25.0						1.968	35.63	44.49	8.86	7.32	0.63	7	359
37 T0 24			50.6	42.0	39.8						2.362	36.61	44.88	9.84	8.07	0.83	8	521
37 T0 26			65.2	54.0	51.3						2.362	36.61	46.46	11.81	9.84	0.83	8	736
37 T0 28	123.6	115.8	99.4	83.4	78.5						2.755	38.39	43.90	13.39	9.84	1.02	9	1142
37 T0 29	123.6	123.6	112.2	94.4	88.3						2.755	38.39	44.29	15.75	11.42	1.02	9	1365
37 T0 31					11.7	11.5	10.8	7.4			1.181	35.43	42.91	5.71	4.72	0.63	6	189
37 T0 32					17.8	17.5	17.1	11.7			1.181	35.43	43.70	7.09	5.75	0.63	6	264
37 T0 33					25.9	25.6	23.8	14.8			1.968	36.02	44.49	8.86	7.32	0.63	7	356
37 T0 34					38.4	38.0	37.5	23.2			2.362	36.61	45.47	9.45	8.07	0.83	8	502
37 T0 35					45.6	45.0	41.6	30.8			2.362	36.61	46.26	11.61	9.84	0.83	8	670
37 T0 38					77.8	76.9	73.1	50.8			2.755	38.78	43.90	13.39	9.84	1.02	9	1132
37 T0 39		123.6	115.6	97.3	91.0	89.9	85.4	65.9			2.755	38.78	44.29	17.32	12.99	1.02	9	1398
37 T0 41								7.4	5.8	4.3	1.181	35.43	42.91	5.71	4.72	0.63	6	189
37 T0 42								11.9	9.4	7.0	1.181	35.43	44.49	7.09	5.91	0.63	6	292
37 T0 43								18.4	14.4	10.8	1.968	36.02	44.49	8.86	7.48	0.63	7	375
37 T0 44								26.1	19.8	14.6	2.362	36.61	45.28	9.45	8.07	0.83	8	500
37 T0 45								33.0	25.6	18.9	2.362	36.61	46.06	11.61	9.84	0.83	8	654
37 T0 48		123.6	123.2	108.8	101.6	100.5	91.0	63.4	49.5	36.6	2.755	38.78	44.29	15.75	11.42	1.02	9	1383
37 T0 49						96.0	93.5	80.0	62.0	48.6	2.755	38.78	44.88	17.13	13.39	1.02	9	1611

OD 42" [1067mm] (ND 1050/42")

type	permissible load [lbs x 1000] ① 210	480	660	840	930	950	985	1040	1075	1110°F	d_1 ②	E_{max} ②	A	B	B_1	F ③	max load ② gr.	wt. [lbs]
37 T1 11	17.1	13.3	9.4								1.181	32.87	45.67	6.50	5.12	0.63	6	206
37 T1 12	27.0	22.5	16.9								1.968	33.46	46.65	7.09	5.91	0.63	7	290
37 T1 13	40.9	31.7	25.0								2.362	34.65	46.85	9.06	7.68	0.63	8	422
37 T1 14	63.2	49.0	35.3								2.755	36.22	48.03	11.61	10.24	0.63	9	634
37 T1 15	72.6	57.1	42.0								2.755	36.61	48.82	11.61	10.24	0.83	9	716
37 T1 16	87.0	73.5	53.1								2.755	36.61	49.02	12.01	10.63	0.83	9	820
37 T1 18	116.5	93.7	67.9								2.755	36.22	46.06	13.19	9.84	0.83	9	1019
37 T1 21			15.7	13.3	12.4						1.181	36.02	44.88	5.71	4.33	0.63	6	203
37 T1 22			22.5	18.9	17.8						1.968	36.61	45.87	7.09	5.75	0.63	7	295
37 T1 23			32.4	26.8	25.4						1.968	36.61	46.65	8.86	7.32	0.63	7	382
37 T1 24			50.8	42.0	39.8						2.362	37.60	47.05	9.84	8.07	0.83	8	553
37 T1 26			65.0	53.7	51.0						2.362	37.60	48.62	11.81	9.84	0.83	8	775
37 T1 28	123.6	116.0	99.6	83.9	78.7						2.755	39.37	46.06	13.39	9.84	1.02	9	1230
37 T1 29	123.6	123.6	112.6	94.6	88.6						2.755	39.37	46.46	15.75	11.42	1.02	9	1475
37 T1 31					11.7	11.5	10.8	7.4			1.181	36.42	44.88	5.71	4.72	0.63	6	202
37 T1 32					18.0	17.8	17.1	11.9			1.181	36.42	45.87	7.09	5.75	0.63	6	286
37 T1 33					25.9	25.6	23.6	14.8			1.968	37.01	46.65	8.86	7.32	0.63	7	380
37 T1 34					38.4	38.0	37.8	22.0			2.362	37.60	47.64	9.45	8.07	0.83	8	541
37 T1 35					45.6	45.2	41.8	30.8			2.362	37.60	48.43	11.61	9.84	0.83	8	718
37 T1 38					78.2	77.1	73.3	51.0			2.755	39.76	46.06	13.39	9.84	1.02	9	1212
37 T1 39		123.6	116.0	97.6	91.3	90.1	85.9	65.9			2.755	39.76	46.46	17.32	12.99	1.02	9	1495
37 T1 41								7.4	5.8	4.3	1.181	36.42	44.88	5.71	4.72	0.63	6	202
37 T1 42								11.9	9.4	7.0	1.181	36.42	46.65	7.09	5.91	0.63	6	321
37 T1 43								18.4	14.4	10.8	1.968	37.01	46.65	8.86	7.48	0.63	7	402
37 T1 44								26.1	20.0	14.6	2.362	37.60	47.44	9.45	8.07	0.83	8	532
37 T1 45								33.0	25.9	19.1	2.362	37.60	48.23	11.42	9.84	0.83	8	697
37 T1 48			123.6	109.0	102.1	100.7	91.5	63.6	49.7	36.6	2.755	39.76	46.46	15.75	11.42	1.02	9	1484
37 T1 49						96.0	93.5	80.3	62.3	48.6	2.755	39.76	47.05	17.13	13.39	1.02	9	1710

Dynamic clamps
Selection overview OD 44" – OD 46"

3

OD 44" [1118mm] (ND 1100/44")

	permissible load [lbs x 1000] ①										d_1	E_{max}					max ②	wt.
type	210	480	660	840	930	950	985	1040	1075	1110°F	②	②	A	B	B_1	F ③	load gr.	[lbs]
37 T2 11	17.3	13.3	9.4								1.181	33.86	47.64	6.50	5.12	0.63	6	207
37 T2 12	27.0	22.5	16.9								1.968	34.45	48.62	7.09	5.91	0.63	7	305
37 T2 13	41.8	31.0	24.5								2.362	35.63	48.82	9.25	7.68	0.63	8	435
37 T2 14	63.2	48.8	35.5								2.755	37.20	50.00	11.61	10.24	0.63	9	655
37 T2 15	72.6	57.1	42.3								2.755	37.60	50.79	11.61	10.24	0.83	9	724
37 T2 16	87.0	73.3	53.7								2.755	37.60	50.98	12.20	11.02	0.83	9	935
37 T2 18	116.5	93.1	68.1								2.755	37.20	48.03	13.19	9.84	0.83	9	1062
37 T2 21			15.7	13.3	12.4						1.181	37.01	46.85	5.71	4.33	0.63	6	203
37 T2 22			22.5	18.4	17.5						1.968	37.60	47.83	7.09	5.75	0.63	7	293
37 T2 23			33.3	27.2	25.6						1.968	37.60	48.62	9.06	7.48	0.63	7	414
37 T2 24			51.0	42.9	40.2						2.362	38.58	49.02	9.84	8.07	0.83	8	567
37 T2 26			66.1	54.6	51.9						2.362	38.58	50.59	11.81	9.84	0.83	8	790
37 T2 28	123.6	116.5	100.0	84.1	78.9						2.755	40.35	48.03	13.39	9.84	1.02	9	1227
37 T2 29	123.6	123.6	113.1	95.1	88.8						2.755	40.35	48.43	15.75	11.42	1.02	9	1477
37 T2 31					11.7	11.5	10.8	7.4			1.181	37.40	46.85	5.71	4.72	0.63	6	199
37 T2 32					18.0	17.8	17.1	11.7			1.181	37.40	47.83	7.09	5.75	0.63	6	284
37 T2 33					26.1	25.6	23.8	15.1			1.968	37.99	48.62	8.86	7.32	0.63	7	390
37 T2 34					38.7	38.2	37.8	22.0			2.362	38.58	49.61	9.45	8.07	0.83	8	552
37 T2 35					45.9	45.2	41.6	31.2			2.362	38.58	50.39	11.61	9.84	0.83	8	736
37 T2 38					78.5	77.3	73.5	51.3			2.755	40.75	48.03	13.39	9.84	1.02	9	1220
37 T2 39		123.6	116.5	98.0	91.7	90.4	85.9	65.9			2.755	40.75	48.43	17.32	12.99	1.02	9	1508
37 T2 41								7.6	5.8	4.3	1.181	37.40	46.85	5.71	4.72	0.63	6	204
37 T2 42								12.1	9.4	7.0	1.181	37.40	48.62	7.09	5.91	0.63	6	314
37 T2 43								18.0	13.9	10.6	1.968	37.99	48.62	8.86	7.48	0.63	7	401
37 T2 44								26.1	20.0	14.6	2.362	38.58	49.41	9.45	8.07	0.83	8	542
37 T2 45								33.3	25.9	19.1	2.362	38.58	50.20	11.61	9.84	0.83	8	710
37 T2 48			123.6	109.5	102.5	101.2	91.7	63.8	49.9	36.9	2.755	40.75	48.43	15.75	11.42	1.02	9	1500
37 T2 49						96.0	93.5	80.5	62.5	48.8	2.755	40.75	49.02	17.13	13.39	1.02	9	1717

OD 46" [1168mm] (ND 1150/46")

	permissible load [lbs x 1000] ①										d_1	E_{max}					max ②	wt.
type	210	480	660	840	930	950	985	1040	1075	1110°F	②	②	A	B	B_1	F ③	load gr.	[lbs]
37 T3 11	16.9	13.0	9.2								1.181	34.84	49.61	6.50	5.12	0.63	6	222
37 T3 12	27.0	22.0	16.9								1.968	35.43	50.59	7.09	5.91	0.63	7	312
37 T3 13	40.7	31.2	25.0								2.362	36.61	50.98	9.25	7.68	0.63	8	464
37 T3 14	62.7	49.2	35.5								2.755	38.19	51.97	11.61	10.24	0.63	9	668
37 T3 15	72.6	57.1	42.3								2.755	38.58	52.76	11.61	10.24	0.83	9	772
37 T3 16	87.0	73.3	53.7								2.755	38.58	52.95	12.20	11.02	0.83	9	960
37 T3 18	116.5	94.4	68.1								2.755	38.19	50.00	13.19	9.84	0.83	9	1105
37 T3 21			15.7	13.3	12.6						1.181	37.99	48.82	5.71	4.33	0.63	6	218
37 T3 22			22.7	19.1	18.0						1.968	38.58	49.80	7.09	5.75	0.63	7	322
37 T3 23			33.5	27.2	25.6						1.968	38.58	50.59	9.06	7.48	0.63	7	441
37 T3 24			51.0	42.5	40.2						2.362	39.57	50.98	9.84	8.07	0.83	8	601
37 T3 26			65.9	54.4	51.7						2.362	39.57	52.56	11.81	9.84	0.83	8	841
37 T3 28	123.6	116.7	100.3	84.3	79.1						2.755	41.34	50.00	13.39	9.84	1.02	9	1244
37 T3 29	123.6	123.6	113.3	95.3	89.2						2.755	41.34	50.39	15.75	11.42	1.02	9	1476
37 T3 31					11.7	11.5	10.8	7.4			1.181	38.39	48.82	5.71	4.72	0.63	6	218
37 T3 32					18.0	17.8	17.3	11.9			1.181	38.39	49.80	7.09	5.75	0.63	6	311
37 T3 33					26.1	25.9	24.1	14.8			1.968	38.98	50.59	8.86	7.32	0.63	7	416
37 T3 34					38.7	38.2	38.0	22.0			2.362	39.57	51.57	9.45	8.07	0.83	8	587
37 T3 35					46.1	45.4	41.8	31.0			2.362	39.57	52.36	11.61	9.84	0.83	8	776
37 T3 38					78.7	77.6	73.7	51.5			2.755	41.73	50.00	13.39	9.84	1.02	9	1310
37 T3 39		123.6	116.9	98.2	91.9	90.8	86.1	65.9			2.755	41.73	50.39	17.32	12.99	1.02	9	1505
37 T3 41								7.6	5.8	4.3	1.181	38.39	48.82	5.71	4.72	0.63	6	218
37 T3 42								12.1	9.4	7.2	1.181	38.39	50.59	7.09	5.91	0.63	6	345
37 T3 43								18.0	13.9	10.6	1.968	38.98	50.59	8.86	7.48	0.63	7	432
37 T3 44								26.3	20.0	14.8	2.362	39.57	51.38	9.45	8.07	0.83	8	579
37 T3 45								33.3	25.9	19.1	2.362	39.57	52.17	11.61	9.84	0.83	8	755
37 T3 48			123.6	109.7	102.7	101.4	91.9	64.1	49.9	36.9	2.755	41.73	50.39	15.75	11.42	1.02	9	1493
37 T3 49						96.0	93.5	80.7	62.7	49.0	2.755	41.73	50.98	17.13	13.39	1.02	9	1846

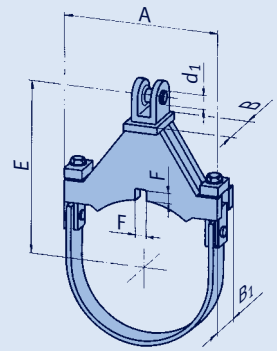

type 37 .. .1/2/3/4/5/6

① Calculation of intermediate values: linear interpolation.

② The connection load group is to be specified when ordering. On selection of a smaller load group than that shown in the table, the 'E' dimensions of the clamp are reduced (see table on page 3.15).

③ Shear lug dimensions: F minus 0.04inch [1mm]; B_1 plus 0.08inch [2mm] (see page 3.44).

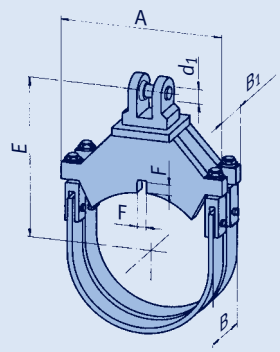

type 37 .. .8/9

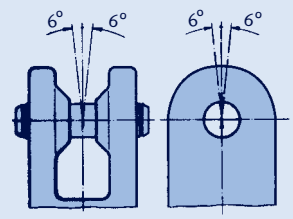

load angle ≤ 6°

Dynamic clamps
Selection overview OD 48"

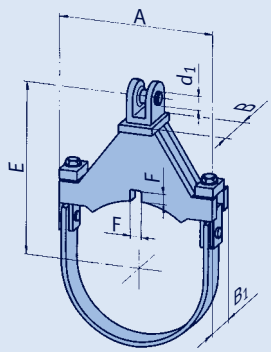

type 37 .. .1/2/3/4/5/6

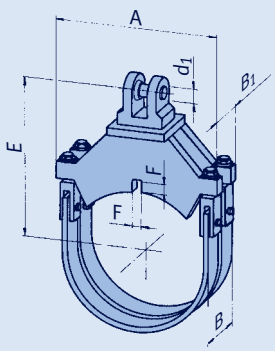

type 37 .. .8/9

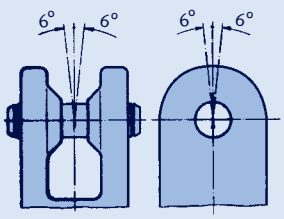

load angle ≤ 6°

OD 48" [1219mm] (ND 1200/48")

	permissible load [lbs x 1000] ①										d_1	E_{max}					max ②	wt.
type	210	480	660	840	930	950	985	1040	1075	1110°F	②	②	A	B	B_1	F ③	load gr.	[lbs]
37 T4 11	16.6	12.6	9.0								1.181	35.83	51.77	6.50	5.12	0.63	6	224
37 T4 12	27.4	22.3	16.9								1.968	36.42	52.56	7.09	5.91	0.63	7	334
37 T4 13	41.1	30.8	24.3								2.362	37.60	52.95	9.25	7.68	0.63	8	473
37 T4 14	63.2	48.8	35.7								2.755	39.17	53.94	11.61	10.24	0.63	9	706
37 T4 15	72.6	57.1	42.5								2.755	39.57	54.72	11.61	10.43	0.83	9	804
37 T4 16	87.0	72.4	54.0								2.755	39.57	54.92	12.20	11.02	0.83	9	974
37 T4 18	116.5	93.3	68.3								2.755	39.17	51.97	13.19	9.84	0.83	9	1142
37 T4 21			15.1	12.4	11.7						1.181	38.98	50.98	5.71	4.33	0.63	6	220
37 T4 22			22.7	18.9	18.0						1.968	39.57	51.77	7.09	5.75	0.63	7	324
37 T4 23			33.0	27.2	25.9						1.968	39.57	52.56	9.06	7.48	0.63	7	444
37 T4 24			51.3	42.5	40.2						2.362	40.55	52.95	9.84	8.07	0.83	8	608
37 T4 26			65.9	54.4	51.7						2.362	40.55	54.53	11.81	9.84	0.83	8	848
37 T4 28	123.6	117.1	100.5	84.5	79.4						2.755	42.32	51.97	13.39	9.84	1.02	9	1340
37 T4 29		123.6	113.5	95.5	89.5						2.755	42.32	52.36	15.75	11.42	1.02	9	1597
37 T4 31					11.7	11.5	11.0	7.0			1.181	39.37	50.98	5.71	4.72	0.63	6	214
37 T4 32					18.0	17.8	17.3	11.7			1.181	39.37	51.77	7.09	5.75	0.63	6	314
37 T4 33					26.1	25.9	24.1	14.8			1.968	39.96	52.56	8.86	7.32	0.63	7	425
37 T4 34					38.9	38.4	38.0	22.0			2.362	40.55	53.54	9.45	8.07	0.83	8	595
37 T4 35					46.3	45.9	42.3	31.2			2.362	40.55	54.33	11.61	10.04	0.83	8	807
37 T4 38					78.7	77.8	74.0	51.5			2.755	42.72	51.97	13.39	9.84	1.02	9	1319
37 T4 39		123.6	117.1	98.5	92.2	91.0	86.6	65.9			2.755	42.72	52.36	17.32	12.99	1.02	9	1623
37 T4 41								7.6	5.8	4.3	1.181	39.37	50.98	5.71	4.72	0.63	6	219
37 T4 42								12.1	9.4	7.2	1.181	39.37	52.56	7.09	5.91	0.63	6	340
37 T4 43								17.5	13.5	10.1	1.968	39.96	52.56	8.86	7.48	0.63	7	434
37 T4 44								26.3	20.0	14.8	2.362	40.55	53.35	9.45	8.07	0.83	8	586
37 T4 45								33.3	26.1	19.1	2.362	40.55	54.13	11.61	9.84	0.83	8	766
37 T4 48			123.6	110.2	103.0	101.6	92.2	64.3	50.1	37.1	2.755	42.72	52.36	15.75	11.42	1.02	9	1608
37 T4 49						96.0	93.5	81.2	62.9	49.0	2.755	42.72	52.95	17.13	13.39	1.02	9	1845

① Calculation of intermediate values: linear interpolation.

② The connection load group is to be specified when ordering. On selection of a smaller load group than that shown in the table, the 'E' dimensions of the clamp are reduced (see table on page 3.15).

③ Shear lug dimensions: F minus 0.04inch [1mm]; B1 plus 0.08inch [2mm] (see page 3.44)

Shear lugs
Type 3L

The shear lugs secure the position of the dynamic clamps in the expected direction of force and are practically unstressed. Even in a load case, friction forces from the pipe-clamp-contact ensure firm positioning. Lateral forces are negligable.

Due to the minimal forces to be absorbed, the weld seam stresses can be kept at a low level, despite the small dimensions of the shear lugs. As a rule they lie under 35% of the yield strength or creep stress limit for load case H (level A/B) according to the permissible ASME or EN values.

Selection

The selection of suitable shear lugs is made after selection of the dynamic clamp and the corresponding dimensions F and B1 according to the selection tables of dynamic clamps on pages 3.29 – 3.43

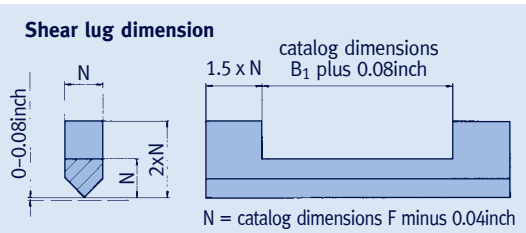

The specified materials for the shear lugs are materials delivered from stock and delivered at short notice. The customer is responsible for the suitability of the pipe material on hand and for the weld seam sizes.

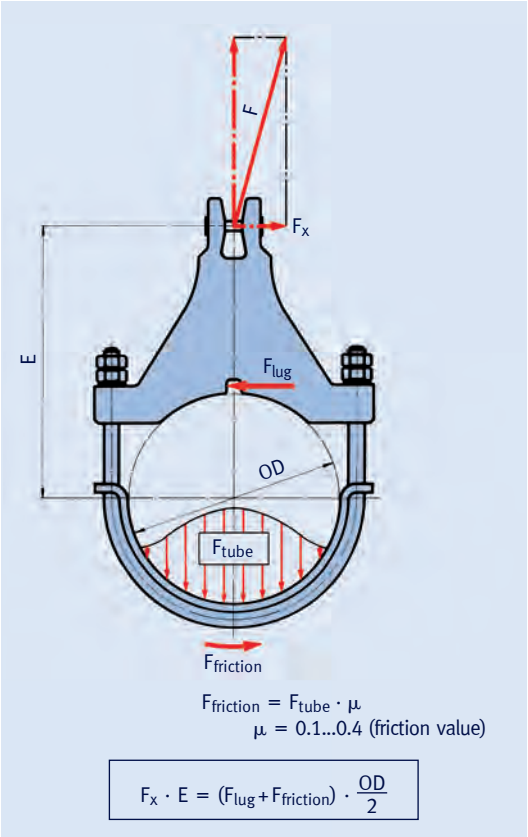

Force distribution in a dynamic clamp with shear lug

To secure dynamic clamps type 36/37 against misalignment due to compressive stress and off-axis load applications, LISEGA offers standardized shear lugs.

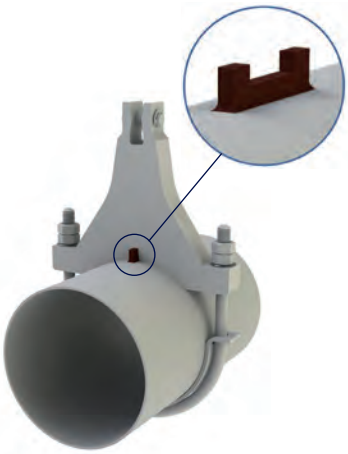

type number									
1st digit	2nd digit	3rd digit	4th digit	5th digit	6th digit		7th digit	8th digit	material ①
3	L	.	.	.	.	–	0	1	S235JR
						–	0	2	S355J2
		3rd – 6th digits of pipe clamps				–	0	3	16Mo3
		type numbers e.g.: 36 22 31				–	0	4	13CrMo4-5
		2	**2**	**3**	**1**	–	0	5	10CrMo9-10
						–	0	6	X10CrMoVNb9-1

① Different materials on request.

Order details:
shear lug
type 3L .. .. - ..

Order example

For shear lug on a pipe clamp type 36 22 31 for a pipe made from material 13CrMo4-5:
Order number 3L 22 31-04

Installation and operating instructions Type 30

Snubbers are precision components of crucial importance for safety. Correspondingly, great care must be taken when dealing with them. Attention to the following points in these instructions is the prerequisite for their proper functioning.

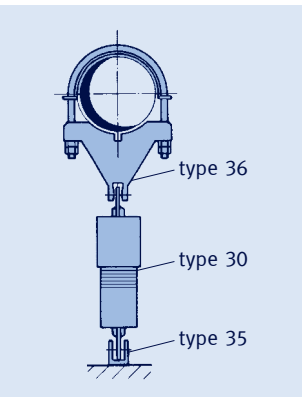

Typical installation situation for type 30

① name plate

② piston rod cover

③ sight glass

④ travel indicator

⑤ connecting lug

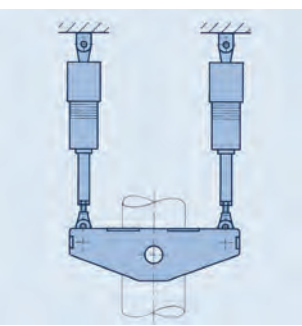

Hanger with snubber type 30 and dynamic clamp type 34 with twist restraints

1 Transport and storage

LISEGA snubbers are high-precision components of great relevance for safety that must be treated with special care during transport, storage, unpacking and handling before and after installation. At this the temperatures should not fall below –4°F.

Snubbers and their ancillary components must be stored in enclosed spaces. They must be protected from dirt and damage. It is recommended that they should be left in their original packaging until installation. Any transport damage incurred or damage caused during their handling on installation must be reported at once to the manufacturer.

Snubbers are not suitable in any way as substitutes for steps or ladders. Before work such as sand blasting, welding, painting etc. is carried out in the close vicinity of a snubber, the snubber must be dismantled, removed and protected.

2 Delivery condition

The snubbers are supplied as fully operational components including hydraulic fluid. On type 30 the connecting lugs are bolted on one side to the base of the snubber and on the other to the piston rod and secured with clamping bolts.

LISEGA snubbers are manufactured entirely of corrosion resistant materials. They therefore require no additional surface treatment. The threaded connecting lugs are electro galvanized and white chromatized.

Weld-on brackets type 35 are supplied separately with the appropriate pins. The surface protection hereby consists of a weldable primer.

For shipment the type 30 snubbers are packed singly with retracted pistons in suitable crates.

Name plate type 30

Stamped on the name plate are:

- **type designation**
- **nominal load**
- **theoretical stroke**
- **oil type and volume**
- **serial number**
- **order number**
- **marking and ident. number, if required**

3 Installation

The snubbers must be inspected for damage before installation. It must also be ensured that the connecting lugs are firmly attached. The connection components on site and the connecting brackets must be fully welded.

The arrangement of the connection brackets must always be selected so that the maximum deflection angle is in the direction of the greatest operational heat expansion. The lateral displacement is restricted to a maximum of ± 6°. Misalignment of the connection brackets should be prevented, due to the limited possibility of movement.

Any welding at the connections or in their vicinity should take place before installation of the snubbers.

For installation, the type 30 snubbers are to be brought to the required installation dimension (dimension from connection pin to connection pin) by extending the piston rods to the necessary installation dimension.

To avoid undesirable blockage of the snubber the rods must be extended slowly, smoothly and below lock-up velocity. The piston rod of the smaller snubbers can be shifted manually. The dead weight of the large-bore snubbers can also be utilized by suspending the snubber from the connecting lug of the piston rod.

The snubbers can be installed in any orientation. The piston rod should be connected to the heat-conducting component so that any radiated heat can be dissipated through the protective cover. When a snubber installation extension is used, the extension should be connected to the heat source.

The snubbers should be installed in such way that the sight glasses for fluid checks are easily visible from the maintenance walkway.

The connection to the connecting structures must be force- and form-locked. Bolted connections, which are in the flow of force must have sufficiently high pretension.

If after installation of the snubber welding work on the connections has to be carried out, care must be taken that no welding current passes through the snubber.

After assembly of a complete system the subsequent inspection of every point of application is recommended:

A. Inspection of all connection points for force- and form-fitting attachment (locking- bolts on the connection lugs, securing of pins, boltings at connections).

B. Inspection of the installation position for freedom of movement on expansion. Care must be taken that the connection lugs in the connection brackets remain freely movable and that the piston cannot run into the end of snubber travel.

A travel reserve of min. 0.39inch [10mm] at the end positions is recommended for the piston position. The position can be read off the travel indicator.

Before commissioning of the plant a final visual inspection of all snubbers and their installation positions is recommended.

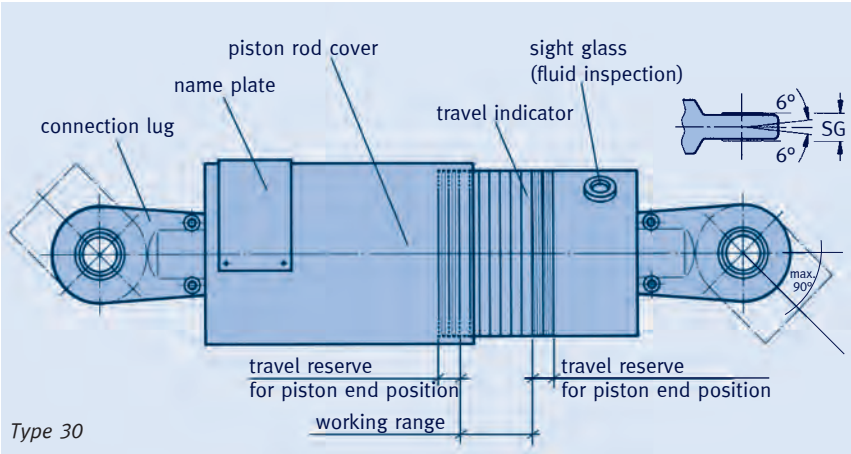

4 Inspection and maintenance

Under normal operating conditions the snubbers are designed to function trouble-free for the maximum lifespan of a plant. To maintain the operating capacity of the snubbers at all times preventive maintenance is recommended. For this, see page 3.47, 'Maintenance recommendations'.

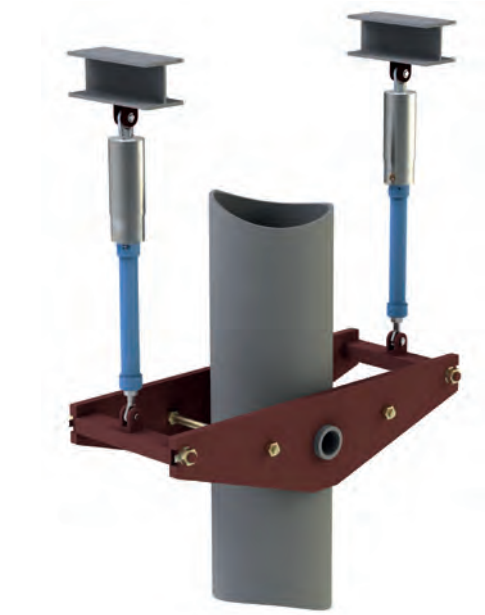

Restraint of a vertical pipe system section by type 30 snubbers with installation extension type 33 and dynamic clamp type 34.

Installation and operating instructions Maintenance recommendations snubbers

Snubbers are crucially important components for the safety of a plant. They serve to protect the piping systems and other components from dynamic overloading from unplanned load cases. As these events occur unpredictably, the full functional safety of the snubbers at all times must be guaranteed.

Under normal operating conditions the service life of the snubbers is designed to match the maximum operational life (60 years) of a plant. The seals and hydraulic fluid should be exchanged at least once during this period, at the latest after 23 years.

Under certain conditions of use (extreme loading), premature aging or increased mechanical wear cannot be excluded. In accordance with the stringent demands concerning reliability, preventive maintenance is recommended. The performance of maintenance work is the responsibility of the plant operator.

Measures

1. **Regular inspection –**
   Visual inspection once a year

2. **Extended testing –**
   Function test, at the latest after 12 years of operation

Implementation

The inspection and maintenance work must be carried out by specially trained personnel.

If required, this work can be performed by specially trained LISEGA service technicians. Fully certified testing facilities are available for dynamic function tests – these mobile test benches can be brought to the plant.

1 Regular inspection

The regular inspection consists of a visual check and should be carried out once a year on all components installed. The first inspection should be directly before commissioning.

In the course of this inspection not only the snubbers but also the installation situation and surrounding conditions must be controlled. The procedure should be carried out with a checklist containing the following information:

- **all positions to be inspected, with details of their locations.**
- **planned, operation-related displacements in connections**
- **special ambient or operational conditions**
- **maintenance measures previously carried out**

Test bench for snubbers

The following points are to be checked at the installation position:

- **name plate data, for conformity with check list**
- **connections at attachment points for force-fitting**
- **freedom of movement for the snubbers on operational deflections**
- **position of piston rod for sufficient stroke, incl. travel reserve (min. 0.39inch [10mm]).**
- **external condition for possible signs of damage or leakage**
- **immediate surroundings for any indications of unusual operational stresses, e.g. increased temperature**
- **inspection glass for fluid level**

As long as the reservoir piston is not visible in inspection glass there is sufficient fluid reserve in the reservoir. If the reservoir piston is visible a leakage of fluid must be assumed.

Observations and conclusions must be recorded on the checklist and if necessary supplemented by recommendations for corrective measures.

2 Extended inspection
A supplementary inspection is carried out after an operational period of 12 years in which a small selection of the snubbers installed (min. 2 units per type) are subjected to an additional function test.

After successful testing the snubbers can be re-installed. If any anomalies in behavior are noted, the components in question should be dismantled and the condition of the functionally important individual units examined. The plant management is responsible for any necessary corrective measures and for their documentation.

The scope of the inspections and the selection of the snubbers to be tested should be agreed on between the plant management and the service engineer involved. The different forms of stress (temperature, radiation, loads, operational vibrations) should receive particular attention.

The time-point and scope of the next extended inspection is to be determined on the basis of the recorded test findings.

It is recommended that, after 23 years of operation at the latest, the seals and hydraulic fluid should be exchanged. After the professional execution of this work, the use of original LISEGA spare parts, and successful function testing, the snubbers can go into operation for a further 23 years.

Securing pipe systems with snubbers type 30

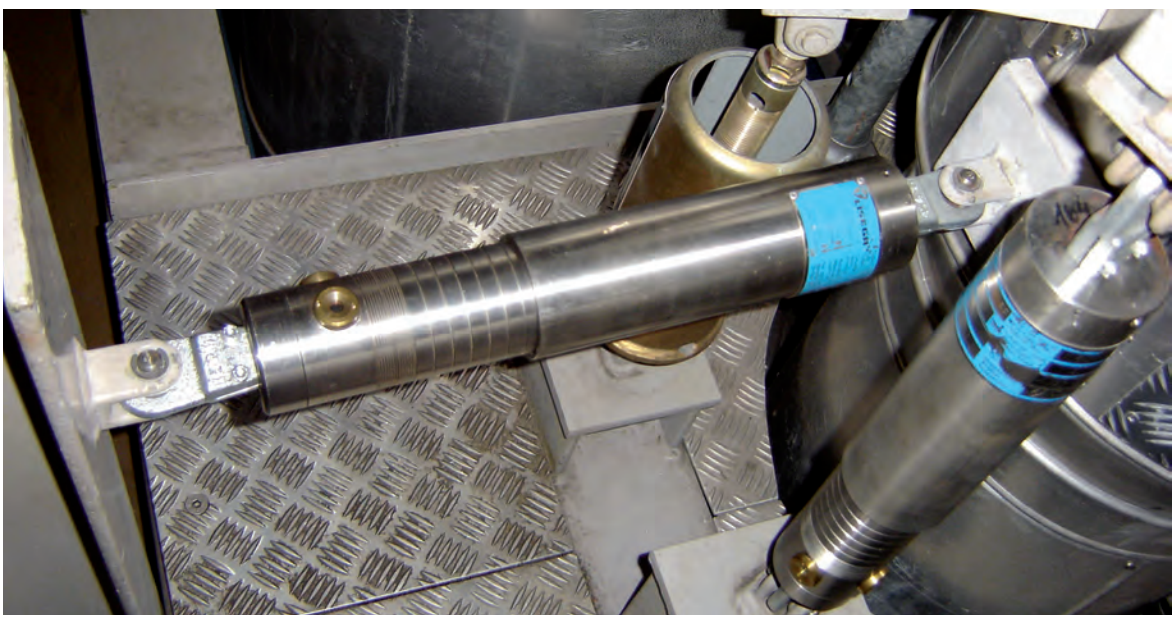

Use of snubbers type 30

Installation and operating instructions Type 35

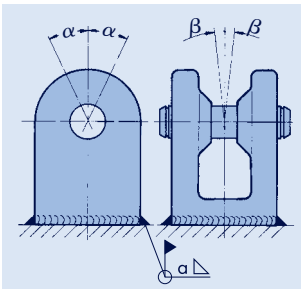

Max. angulation of type 35

type	a* α=15° β= 6°	a* α=30° β= 6°	a* α=45° β= 6°
35 19 13	3/16	3/16	3/16
35 29 13	3/16	3/16	3/16
35 39 13	3/16	3/16	3/16
35 49 13	3/16	1/4	9/32
35 59 19	5/16	13/32	15/32
35 69 19	7/16	17/32	5/8
35 79 19	19/32	25/32	7/8
35 89 19	13/16	1 1/32	1 3/16
35 99 11	27/32	1 1/8	1 9/32
35 09 13	25/32	31/32	1 1/16
35 20 19	1 9/32	–	–

* Leg length

Explanation of weld seam symbols:

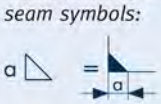

a in inch

1 Delivery condition

LISEGA weld-on brackets type 35 are supplied painted and with fitted pins. The surface protection typically consists of a weldable primer, unless otherwise noted.

2 Installation

The connection components and connecting brackets on site must be fully welded.

The arrangement of the weld-on brackets should always be so arranged that the max. angulation is in the direction of the operational thermal expansion ($\sphericalangle \alpha$). The lateral displacement is restricted to max. ± 6° ($\sphericalangle \beta$). Any misalignment of the weld-on brackets should be prevented due to the hereby limited freedom of movement.

Welding at the connecting components or in their immediate vicinity should be carried out before installation of the snubbers, rigid struts, etc.

The following procedure is recommended for the welding of the brackets:

The minimum weld seam thickness 'a' for weld-on brackets type 35 depends on the angulations α and β. In the calculation a permissible stress of 13.05 ksi [90N/mm²] in load case H (level A/B) was the basis.

On an increase in the angulation α to 90° the permissible stresses are reduced by approx. 15% at constant weld seam thickness (a min. at α = 45°).

The relevant load table (**"technical specifications"** page 0.6) applies for the permissible stresses.

Welding procedure

1. Remove pins from weld-on bracket.
2. Preheat weld-on bracket from type 35 79 19 and above to approximately 212°F [100°C].
3. Use base electrodes.
4. Apply the weld seam in layers to avoid welding distortion **(Welding sequence: see below)**.
5. Allow the weld-on bracket to cool down to 212°F [100°C] after every layer.

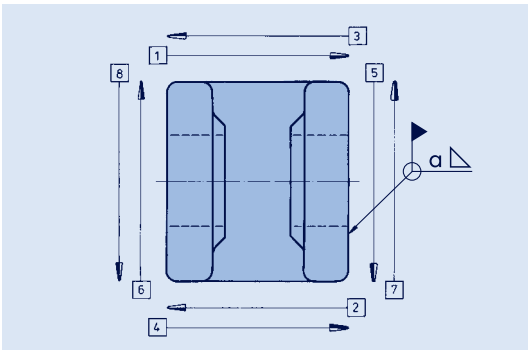

Note: Welding must be carried out only by qualified personnel and is to be supervised by the technical department. When mounted vertically, vertical welds should be made in upwards direction.

3 Surface protection

After completion of the attachment, the primer surface of the weld-on brackets can be painted. It is urgently advised to do this **before** installation of the snubber.

Installation and operating instructions Type 3D

1 Transport and storage

Care must be taken during transport that the viscoelastic damper type 3D is always in upright position to avoid any leakage of the damping medium. When storing in the open the dampers are to be protected from dirt and water.

2 Delivery condition

LISEGA viscoelastic dampers are delivered pre-set to cold condition (offset). This is ensured by the transport brackets, which keep the offset position fixed in place between the upper and lower sections of the damper. If not ordered otherwise the blocking position (offset position x = 0, y = 0, z = 0) is supplied.

For a weight greater than 44lbs [20kg], an M16 inner thread of limited engagement depth is located in the upper connection plate for attachment to a hoist.

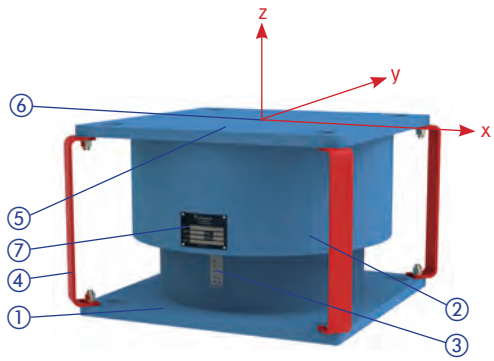

① lower connection plate
② casing
③ position indicator
④ transport bracket
⑤ upper connection plate
⑥ connection thread M16 for hoist
⑦ name plate

The following information is stamped on the name plate:

- **type**
- **serial and commission number**
- **nominal load**
- **operating temperature**
- **ident. number**

3 Installation

For installation, attention must be paid to the requirements of the installation instructions for the pipe systems. The LISEGA viscoelastic damper, which is supplied with installation load (cold load) is transported to the place of assembly in an upright position. A force-fitting connection of the upper and lower connection plates is made to the pipe system and steel-work. For this, the transport brackets must be removed. The min. bolt torque values can be found in the table at the side.

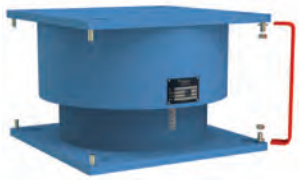

Removal of transport brackets

4 Commissioning

For types 3D.. ..-D it is recommended that the plant should be started up slowly so that the dampers can adjust to operating temperatures, otherwise strong reaction forces could develop that exceed the specified nominal loads. If required, the dampers could be brought to operational temperature by means of supplementary heating. During commissioning the relative position of the upper and lower connection plates changes to hot load position, as calculated beforehand.

thread size	min. bolt torque values* [lbs ft]
5/8"	53
3/4"	102
1"	174
1 1/8"	351
1 1/4"	798

** Friction value μ = 0.14*

During operation the damper should function roughly in middle position, otherwise the dynamic characteristics of the damper change. If the middle position in the tolerance range is not reached the calculations are to be reviewed.

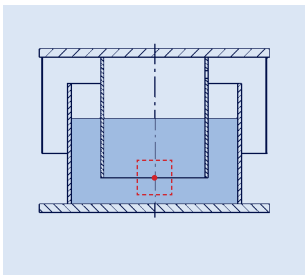

= Working range of type 3D at the middle position

5 Inspection and maintenance

LISEGA viscoelastic dampers are in principle free of maintenance, but an annual visual inspection is recommended. For revision purposes the transport brackets can be attached again.

Name plate type 3D

Installation and operating instructions Type 36, 37

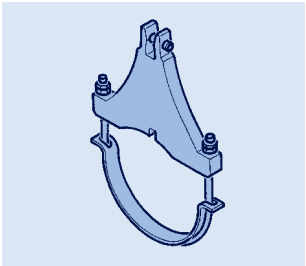

Type 36 .. .1/2/3

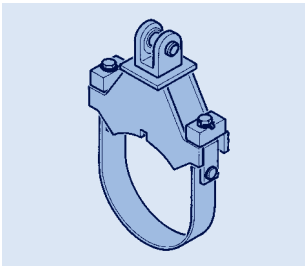

Type 37 .. .1/2/3/4/5/6

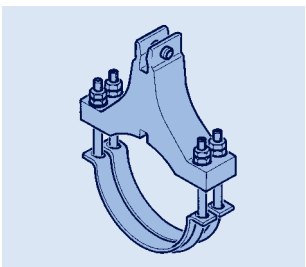

Type 36 .. .4/5

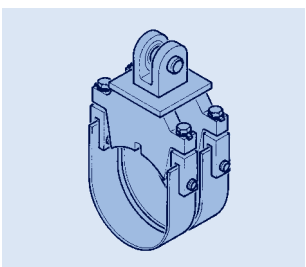

Type 37 .. .7/8/9

1 Transport and storage

Care must be taken that the dynamic clamps are not damaged during transport. It is recommended that the components are only stored in dry, enclosed spaces. If storage in the open is unavoidable, the clamps must be protected from dirt and water.

2 Delivery condition

LISEGA dynamic clamps are supplied with all the necessary boltings for installation. For reasons of dispatch optimization the clamps may be delivered partially assembled.

Shear lugs

In order to avoid any kind of twist of the clamp it is recommended that shear lugs be fitted. See also page 3.44.

The dimensions of the recesses for the shear lugs can be found in the selection tables for dynamic clamps on pages 3.29 – 3.43.

3 Installation

Type 36

This design consists of a massive upper section with integrated connecting bracket and, depending on the load range, with one or two U-bolts and a shim plate.

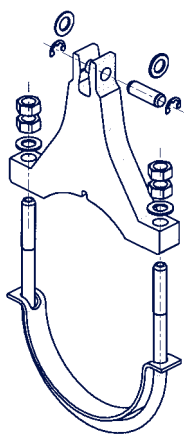

For installation the pre-assembled U-bolts must be removed. The upper part, fitted with a lug recess, is seated on the shear lug. The U-bolt is inserted from the opposite side together with the shim plate and at first only loosely screwed. The position of the clamp is to be checked again for proper alignment. The bolts can then be tightened and locked.

Type 37

This design is the heavy duty version for large pipe diameters and heavy loads.

As a rule, type 35, the weld-on bracket suitable for the load, is already welded on. If the bracket is delivered separately at customer request, the welding instructions on page 3.49 are to be followed when welding.

The counterpart to the upper section of the clamp consists, depending on the load, of one or two flat steel straps which are connected by pins to the upper section for transport.

For installation the flat steel straps must be removed by loosening the pin connections. The upper part with the lug recess is seated on the shear lug. From the opposite side the flat steel strap is inserted into the bolt-on clevis and fastened with the pins, which are then locked with splints.

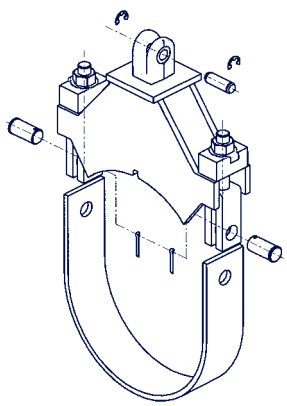

The position of the clamp must be checked once again for proper alignment. The bolts can then be firmly tightened. To avoid unintentional loosening the hexagon nuts on the bolts must be locked with tab washers.

Pipe clamps, clamp bases, pipe connecting parts

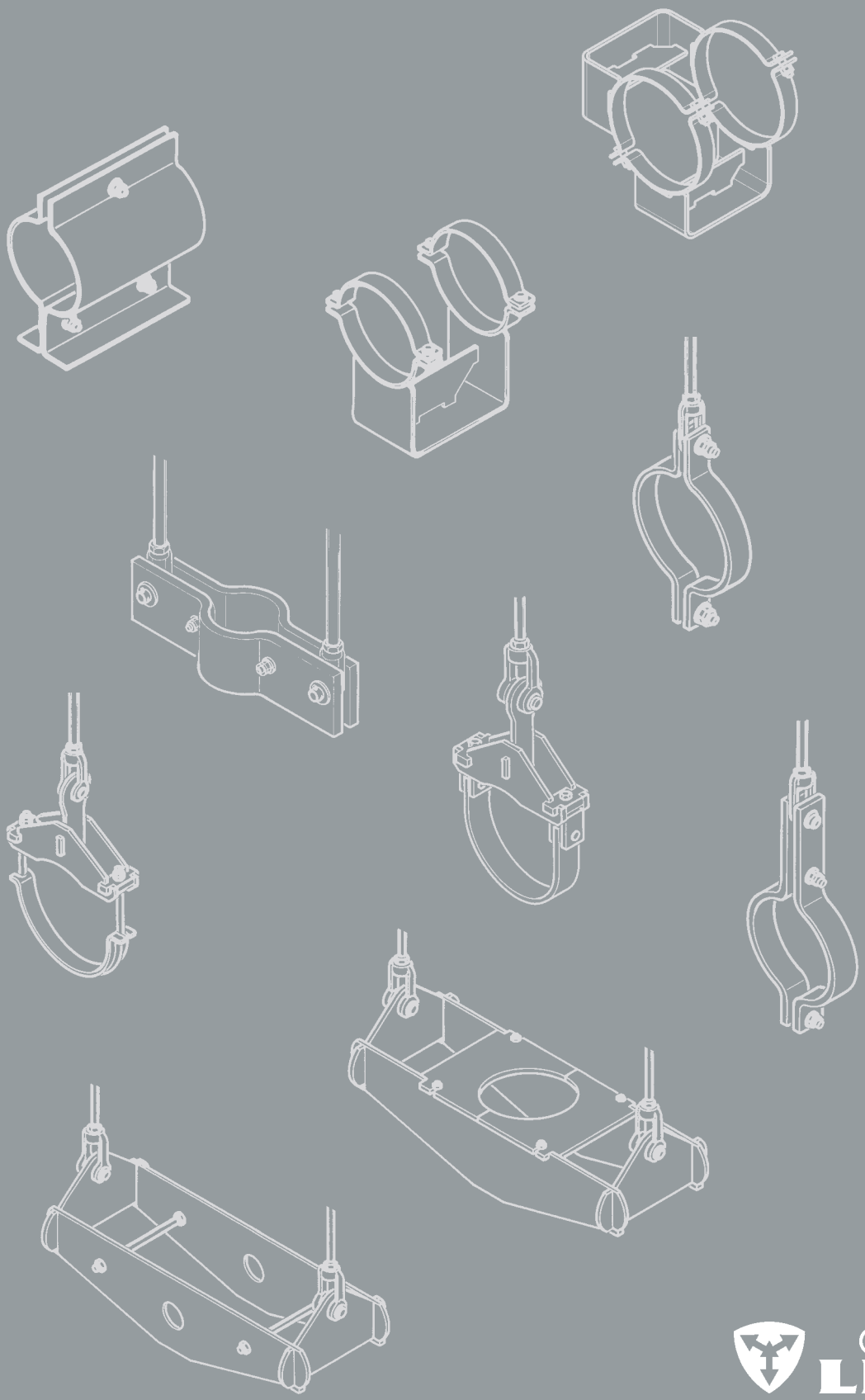

PRODUCT GROUP 4

LISEGA

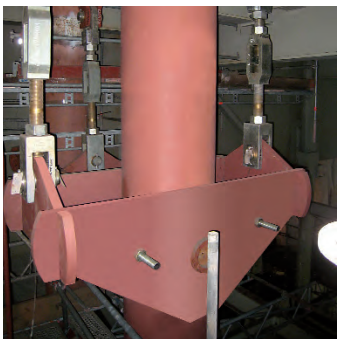

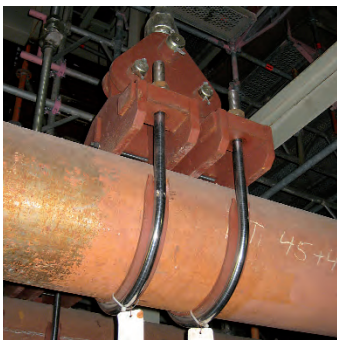

Pipe clamps, clamp bases, pipe connecting parts

Contents **Page**

Field of application **4.1**

Product description **4.3**

Product supplements for pipe clamps and clamp bases **4.7**

Special designs **4.9**

Selection of pipe clamps and clamp bases **4.10**

Selection tables **4.11**

Pipe clamps and clamp bases OD 0.84" – 48", T ≤ 1110°F. **4.11**

Pipe clamps and clamp bases OD 0.84" – 48", T ≥ 1110°F. **4.52**

U-bolts type 40 . . . . . **4.64**

Weld-on lugs for pipes type 41 . . . . . **4.65**

Weld-on lugs for pipe elbows type 41 . . . . . **4.66**

Connection plates type 77 . . . . . **4.67**

Lift-off restraints for clamp bases type 49 . . . . . **4.68**

Installation and operating instructions **4.69**

Field of application

In high temperature pipe systems, pipe clamps and clamp bases are the most highly stressed and hence the most vulnerable components in the support chain due to the effects of such high temperatures. However, pipe clamps are seldom checked, as access is difficult after commissioning due to the surrounding insulation.

Standardization

Pipe clamps, clamp bases, pipe weld-on lugs and U-bolts all fall into the category of pipe connections. For these products, the design criteria of the pipe systems lead to wide variations, and so to a particularly large number of components. The dynamic clamps of product group 3 also belong in principle to this group. The design of both horizontal and vertical piping is determined by:

- **diameters**
- **loads**
- **temperature of the medium**
- **insulation thicknesses**

For proper coverage of the whole spectrum with safe components, LISEGA provides a complete program of standardized products for the whole field of application.

Following the special requirements of this field, the corresponding ideal design has been developed.

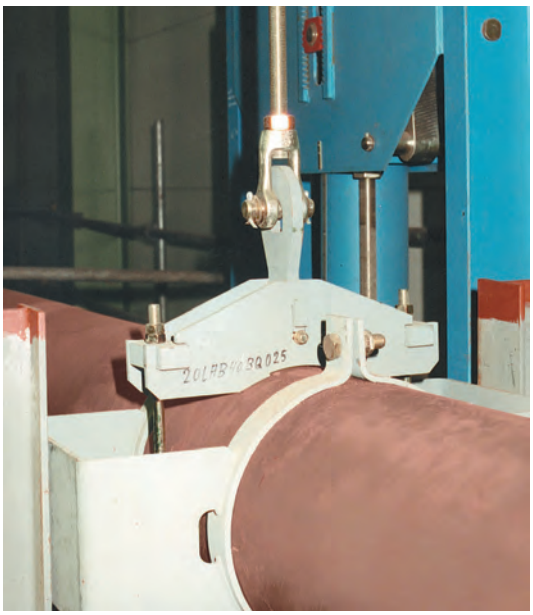

Diameters range from OD 0.84" to OD 48" [OD 21.3 to OD 1219mm], the temperature range extends to 1200°F [650°C] and the permissible loads – divided into economical areas of operation – cover the highest level of the practical field of application.

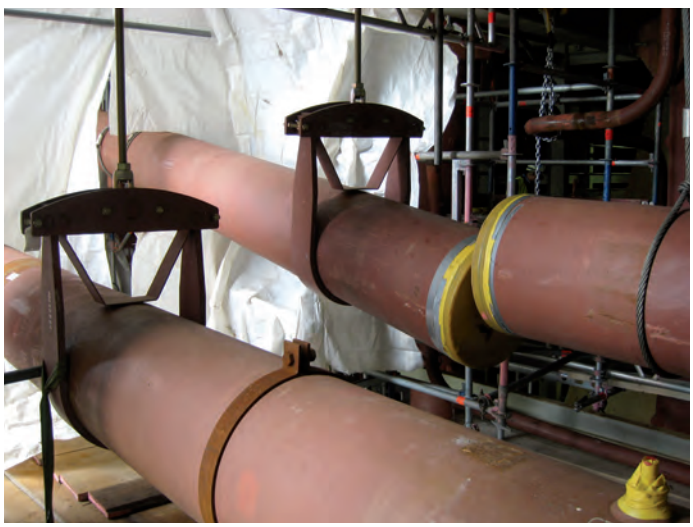

These standardized components form an integral part of the LISEGA modular system, so load and connection compatibility are correspondingly assured.

Quality

Because of their critical field of application the design and construction of the pipe-surrounding components require special attention.

As a matter of principle, just as much care and attention should be given to the pipe supports as to the piping itself, since **the pipe systems can never be better than their supports!**

The most important prerequisite for reliable component quality is comprehensive standardization.

When choosing suitable products the customer should therefore place his confidence in com ponents of proven quality.

Plant designers, constructors and operators can all benefit from the standardization of the whole spectrum of application with state-of-the-art design:

- **complete and clearly structured data tables simplify planning**
- **all supplies from a single source through integration into a comprehensive support program (LISEGA modular system)**
- **superior quality at competitive prices through rational series production and technically advanced designs**
- **consistent standardization enables short lead times**
- **favorable performance / weight ratios, easy-to-install designs and connection compatibility of LISEGA components allow efficient installation**
- **design in accordance with current codes ensures maximum operational safety**
- **heat loss reduced through compact component dimensions**
- **certifications by independent testing institutes can be supplied**
- **for pipe clamps used at higher temperature ranges, certified materials are used**

Product description
Horizontal clamps Type 41, 42, 43, 44

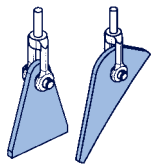

Type 41

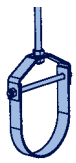

Type 42 .. 17

Type 42 .. .9

Type 43

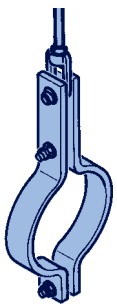

Type 44 .. .1 .2 .3

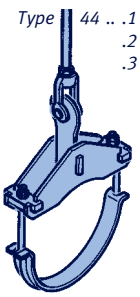

Type 44 .. .4 .5 .6 .7 .8 .9

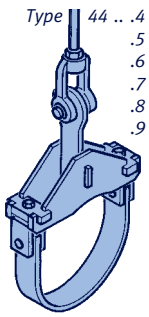

Type 44 .. 51 .2 .3 .4 .5 .6 .7

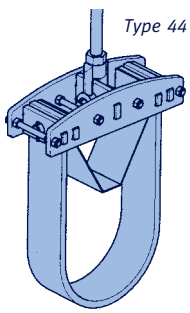

1 Weld-on lug type 41

This type is mainly used as a pipe connection for pipe systems under 176°F [80°C] on horizontal pipes or pipe elbows.

2.1 Horizontal clamp type 42 .. 17

This clamp can be used as a construction clamp or hanger clamp in cold piping systems. The field of application is limited to smaller pipe dimensions.

2.2 Horizontal clamp type 42 .. .9

This clamp is used for larger pipe dimensions.

3 Horizontal clamp type 43

This hanger clamp follows the traditional fla steel design. Its use is limited to an economical range up to an individual weight of approximately 55.1lbs [25kg]. Connection to the load chain is made by pin and LISEGA threaded eye nuts type 60.

The application range of the pipe clamps can extend over several LISEGA load groups due to the interdependency of load and temperature in material properties. For this, the eye nuts are so designed that at least three corresponding pin diameters can be accommodated.

4 Horizontal clamp type 44

A rigid yoke takes up the load from a pipe-surrounding U-bolt with a shim plate. From certain diameters, temperatures or load ranges, a flat steel strap is used instead of a round steel U-bolt.

Completely eliminating welds, the individual components are form-fitted with plug connec tions and bolted to each other (Patent No. DE 3817059).

Horizontal clamp type 44 is used where type 43 reaches economic limits. These are essentially the high temperature, large pipe diameters in high load ranges.

Connection to the load chain is made with a lug and LISEGA clevis type 61. The connection lug is designed to accommodate connection pins in a number of LISEGA load groups.

Same function → reduced weight

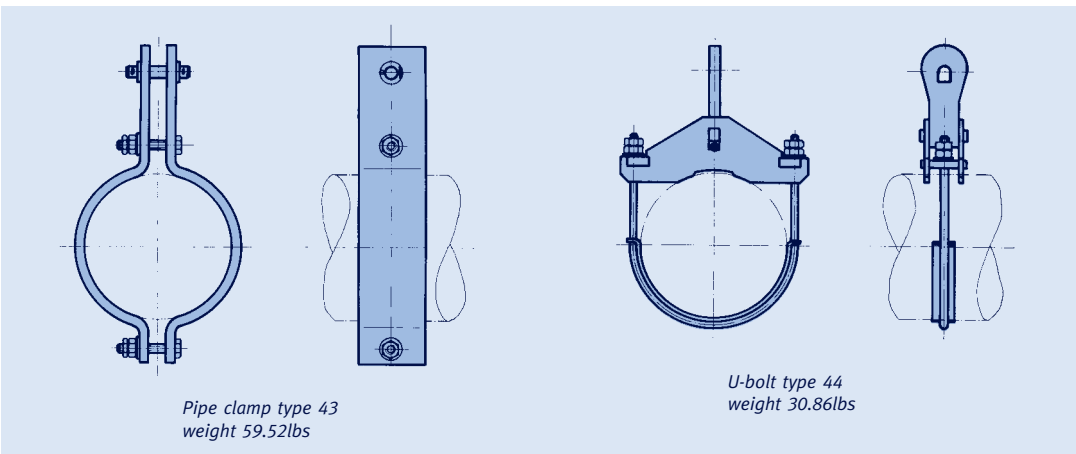

Weight reduction through type 44:
Comparison of a LISEGA pipe clamp with a pipe clamp of traditional shape following the same design criteria, load 7194lbs [32kN], temperature 572°F [300°C].

Product description
Riser clamps Type 45, 46, 48

1 Riser clamp type 45

With the riser clamp type 45 the lower load and temperature ranges are covered. This design is particularly economical for its diameter range.

Connection to the vertical piping is made with shear lugs welded to the pipe. The design and fitting of the lugs is the responsi bility of the piping manufacturer.

Connection to the load chain is made with pins and LISEGA threaded eye nuts type 60. At least 3 LISEGA load groups can be covered.

When ordering, the span required (dimension L) must be specified.

2 Riser clamp type 46/48

The design of this riser clamp uses the box shape for its economical use of material.

The individual parts are connected without welding by means of connections, then locked to each other (Patent No. DE 3817015).

Connection to the vertically arranged pipe system can be made in two different ways and so requires two different designs:

- **Type 46, for load support using 4 shear lugs welded to the pipe. Two lugs are in general used only for ND ≤ 6" [≤ 150] and must be so arranged that they are located directly above the side section.**
- **Type 48, for load support using trunnions welded to the pipe.**

The bore hole diameter for trunnions amounts to approximately 1/3 of the pipe diameter in accordance with ASME Code Case N3923 and DIN EN 13480-3.

Connection to the load chain is done with integrated lugs designed for connection to LISEGA threaded clevises type 61.

The connecting lugs are shaped in such a way that they can accommodate the connection pins for several LISEGA load groups.

The inner dimensions of the box, which are required for the later trunnion calculations (N dimension) can, depending on the pipe diameter OD, be taken from the table at the bottom right.

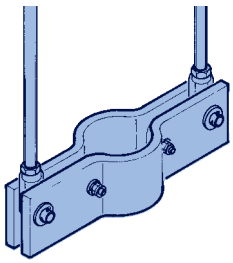

Riser clamp type 45 with connections

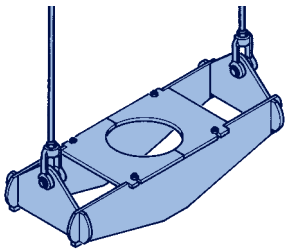

Riser clamp type 46 with connections

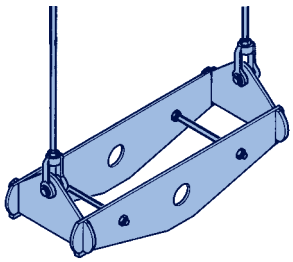

Riser clamp type 48 with connections

Materials of pipe clamps and clamp bases

clamp materials / type	carbon steel	carbon steel	alloy	alloy	A193B7	alloy	Gr.91
horizontal clamps							
type 41	x	x					
type 42	x		x	x		x	x
type 43	x		x	x		x	x
type 44	x	x	x	x	x	x	x
riser clamps							
type 45	x			x		x	x
type 46	x	x	x	x		x	
type 48	x	x	x	x		x	x
clamp bases							
type 49 .. .1	x						
type 49 .. .2	x						
type 49 .. .3	x						
type 49 .. .4	x						
type 49 .. .5			x	x		x	x

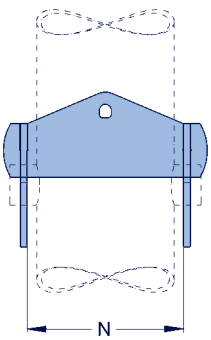

Inner width of box (N-dim.) of riser clamps type 46/48

pipe diameter	N-Dim.
≤ OD 3.94 [100mm]	OD + 0.47inch [12mm]
OD 3.94 ≤ OD 15.75 [100mm ≤ 400mm]	OD + 0.87inch [22mm]
> OD 15.75 [400mm]	OD + 1.26inch [32mm]

Product description
Clamp base Type 49

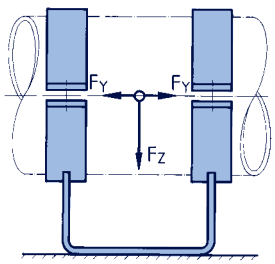

$F_Y = \mu \cdot F_Z$

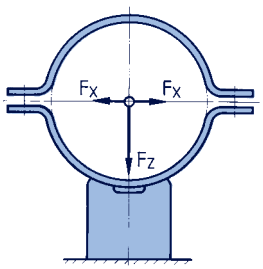

$F_X = \mu \cdot F_Z$

Possible load applications on a clamp base.

μ = friction coefficient

material	μ
steel / steel	~0.3
steel / PTFE	~0.1
steel / high temperature component to 536°F [280°C]	~0.1...0.18
steel / high temperature component from 536°F to 660°F [280°C to 350°C]	~0.25

Further information on page 7.11.

Clamp bases are generally used as slide bearings (loose supports) for horizontally arranged pipe systems.

As with pipe clamps, the application spectrum covers a diameter range from OD 0.84inch to OD 48inch [21.3mm to OD 1219mm] and a temperature range up to 1110°F [600°C]; for OD up to 3.50inch [88.9]: 1200°F [650°C].

In addition to the support load, the operating temperature of the pipe system is an essential criterion in the design of clamp bases; the material to be used is determined by this. The installation height is governed by the thickness of the insulation.

Fixed installation heights are assigned to the temperature ranges in order to keep the number of sizes within a reasonable range.

The fixed installation heights relate, for all diameters, to the respective lower rim of the pipe and change by 1.97inch [50mm] or 3.94inch [100mm] increments.

The standard dimensions selected for the support height of the pipes, as well as the length of the slide bases, cover the majority of applications.

Different applications, according to temperature and loads, require different clamp base designs.

If required, components with special dimensions can be supplied. A small selection is shown on page 4.9 in the section 'Special designs'.

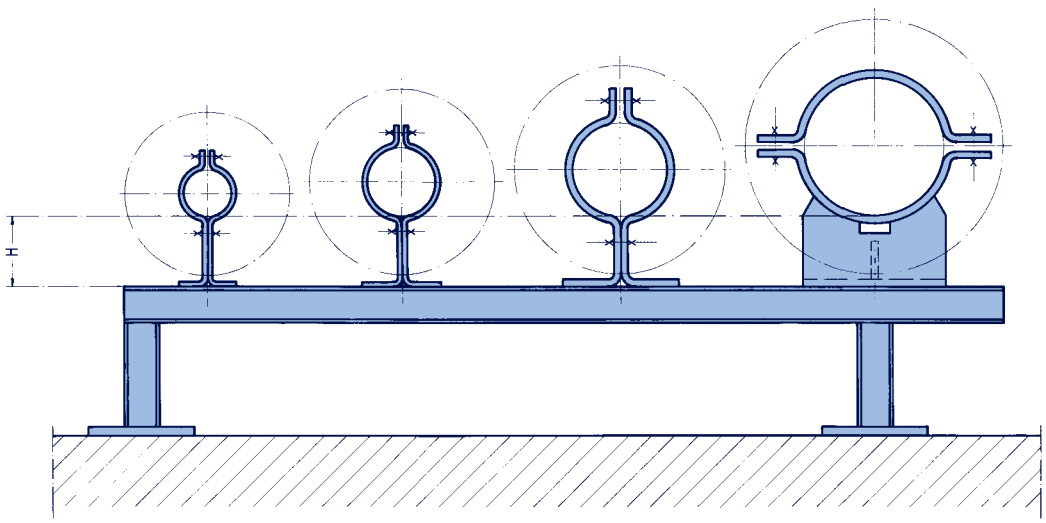

Clamp base heights dependent on temperature of the medium and on pipe diameter

temp. up to 660°F [350°C]	H	1.97	3.94	5.91	7.87
	pipe Ø	0.84–3.5	0.84–22	4.25–48	12.75–48

temp. up to 930°F [500°C]	H	3.94	5.91	7.87	9.84	11.81
	pipe Ø	0.84–1.06	1.33–3	3.5–7.625	8.625–18	20–48

temp. up to 1040°F [560°C]	H	5.91	7.87	9.84	11.88
	pipe Ø	0.84–3	3.50–6.625	7.625–12.75	14–48

temp. up to 1110°F [1200°F] [600°C [650°C]]	H	5.91 (7.87)	7.87 (9.84)	9.84	11.81
	pipe Ø	0.84–3	3.5–6.625	7.625–12.75	14–48

1 Clamp bases for low temperatures and small pipe diameters

The design (version 1) for this field of application consists of two omega-shaped halves. On installation with the piping the lower section is firml bolted and forms the slide base.

In the upper section the pipe is held in position by bolting.

Through the free space under the pipe gained by the design (version 1) of the component, constant ventilation of this area is ensured. This is essential for cold pipe systems, as otherwise pipe corrosion caused by moisture could result after only a short time. These clamp bases are electro galvanized as a standard.

2 Clamp bases for medium and high temperatures

This design (version 2) consists of a shaped lower metal plate, firmly welded to two pipe clamps. The lower section is fitted, according to the respective design load, with a reinforcing gusset.

These clamp bases can be used in a variety of ways. By using two lower sections set against each other, a double guide can be easily produced (Fig. 2). By additionally fitting lateral guides, guidance from all sides can be provided.
The shape of the base plate permits the simple mounting of lift-off restraints (Fig. 1). The lower section is so designed that it can be fitte with a stainless steel plate as a sliding surface for a slide component. See also 'product supplements', page 4.7.

3 Special designs

- **If required, special lengths or heights are possible. For very large expansion displacement it might be more expedient to arrange for correspondingly long support surfaces on site.**
- **For special pipe diameters not contained in the selection tables, either corresponding intermediate sizes are supplied, or suitable inlay plates are provided for slight diameter differences.**
- **If required, double or multiple guides on the basis of standard clamp bases can be supplied. See also page 4.8.**

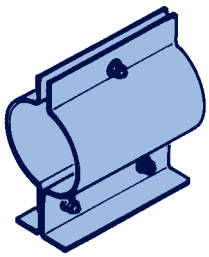

Version 1:
Clamp base for smaller pipe diameters type 49 .. .1, 49 .. .2 up to ND6" [150].

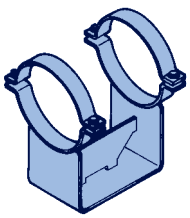

Version 2:
Clamp base for medium and high temperatures type 49 .. .3, 49 .. .4, 49 .. .5.

Examples of use:

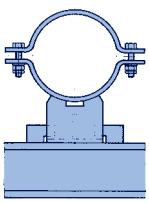

(Fig. 1)

Clamp base type 49 with lift-off restraint. Permissible loads and dimensions, see page 4.68.

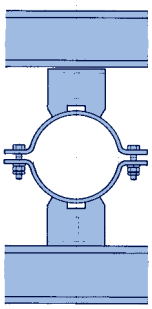

(Fig. 2)

Clamp base type 49 .. .. G2P as double guide.

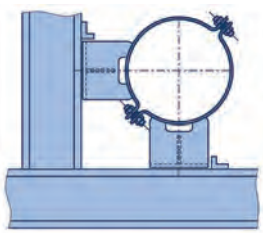

Clamp base type 49 .. .. G2A as guide.

Product supplements for pipe clamps and clamp bases

Pipe clamps and clamp bases are often equipped with supplementary parts for special applications. For this purpose LISEGA offers a wide variety of possibilities.

1 Stainless steel inlay plates

For the support of austenitic pipe systems, all LISEGA pipe clamps and clamp bases can be fitted with stainless steel inlay plates. These plates must be ordered separately and are offered with the following type numbers:

For type series 36: Stainless steel plate 36 .. ..-IP
For type series 37: Stainless steel plate 37 .. ..-IP
For type series 42: Stainless steel plate 42 .. 09-IP
For type series 43: Stainless steel plate 43 .. ..-IP
For type series 44: Stainless steel plate 44 .. ..-IP
For type series 45: Stainless steel plate 45 .. ..-IP
For type series 46/48: Stainl.st.plate 46/48 .. ..-IP
For type series 49 .. 11/12:
Stainless steel plate 49 .. ..-IP
For type series 49 .. 13/14/25/35/45/55:
Stainless steel plate 2x 42 .. 09-IP

Examples: For a pipe clamp type 44 27 13
→ inlay plate type 44 27 13-IP.
For a clamp base type 49 11 25
→ 2x inlay plate type 42 11 09-IP.

Material thickness: 0.02inch [0.5mm]

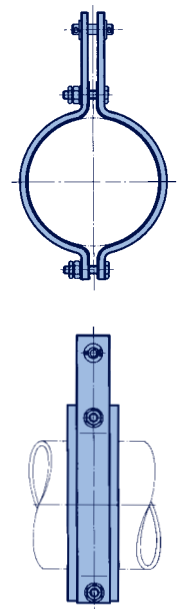

Type 43 with inlay plate

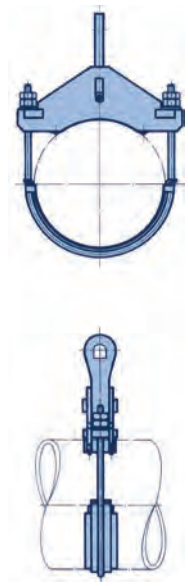

Type 44 with inlay plate

Stainless steel slide plate under clamp base type 49, high temperature slide plate and spring support type 29

2 Stainless steel slide plates

To reduce friction resistance in clamp bases, all of them can be fitted with stainless steel sliding surfaces. These sliding surfaces, in combination with PTFE slide plates **type 70** (up to 356°F [180°C]) or the **new LISEGA high temperature sliding material (up tp 660°F [350°C])**, reduce friction forces by approximately 10–20% of the support load. See also section 'slide plates' page 7.10 This version of the clamp bases with slide plates must be ordered separately. For this, please add the type number suffix "SP":

Examples: 49 22 14-SP
49 27 14G2A-SP

The installation height of the clamp base increases by approximately 0.12inch [3mm].

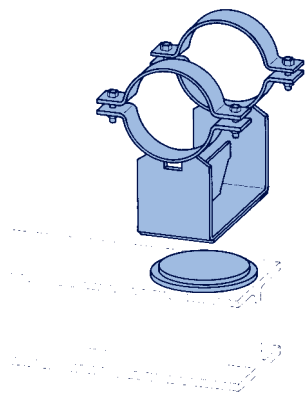

Lift-off restraint

3 Lift-off restraints type 49 00 01 to 49 00 05

The clamp bases can, if required, be fitted with lift-off restraints. These restraints ensure that the clamp base remains in position if the support load is too small or the clamp base cannot be welded on. They can be ordered according to the selection tables (page 4.68).

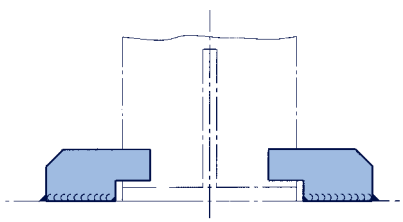

4 Connection plates type 77

Two pipe clamps types 43 and 44 can be coupled with connection plates. This way the load can be doubled. A selection is shown on page 4.67.

When ordering, this is made clear by replacing the type designation of the clamps with “77”.

Example type 43:
77 09 39 for clamps 43 01 19 – 43 09 59
77 17 39 for clamps 43 10 19 – 43 17 59
77 19 39 for clamps 43 19 19 – 43 19 59

Example type 44:
77 66 38 for type 44 66 38

The load group must be specified for type 44, as the upper connection (type 60) must be correspondingly selected.

5 Anti-corrosion separating tape

Separating tapes are used when the pairing of dissimilar materials in pipe and pipe supports must be electrically separated to prevent local corrosion. This way, the piping can be fitted with supports of more econom ical martensitic materials, and still be more effectively protected.

The adhesive separating tapes can be applied in a temperature range from –31°F to +410°F [–35°C to +210°C] and are largely resistant to acids, bases and solvents. They are applied as adhesive tape (in part multilayered) to the grease-free piping at the point where the pipe clamp body surrounds the pipe. The material thickness amounts to only 0.02inch [0.5mm].

The tapes are supplied in different widths to suit the clamps in pieces of 3'–3.37" length (whole meter lengths). The order designation is:

Order details:
Anti-corrosion separating tape type 42 00 ..
L = ...inch

6 Pipe guides type 49 .. .. G..

It is often necessary to limit the piping in its displacement horizontally, vertically or in both directions. On the basis of the type 49 standard designs (version 2), pipe guides are offered here as a variant corresponding to the standard design in form and load capacity. The order number is made up from the standard type number and the desired features of the design.

Example:

type 49 standard:	**49 .. ..**
type 49 double guide parallel:	**49 .. .. G2P**
type 49 lateral guide angulated:	**49 .. .. G2A**
type 49 triple lateral guide:	**49 .. .. G3**
type 49 foursided guide:	**49 .. .. G4**

These designs can be fitted with extra slide plates.

Pipe bearing (type 49 .. .. G2P)

type	width [inch]	type	width [inch]
42 00 04	1.57	42 00 11	b=4.33
42 00 05	b=1.97	42 00 12	b=4.72
42 00 06	b=2.36	42 00 15	b=5.91
42 00 07	b=2.76	42 00 17	b=6.69
42 00 08	b=3.15	42 00 20	b=7.87
42 00 09	b=3.54	42 00 22	b=8.66
42 00 10	b=3.94		

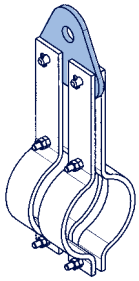

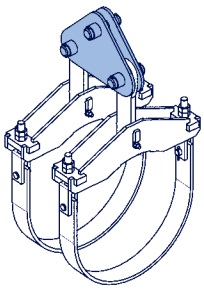

Connection plates type 77 on pipe clamps type 43/44

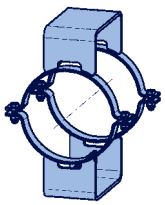

Type 49 .. .. G2P

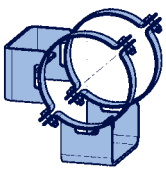

Type 49 .. .. G2A

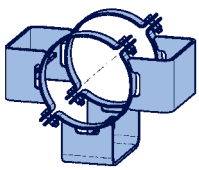

Type 49 .. .. G3

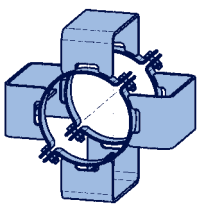

Type 49 .. .. G4

Special designs

For pipe supports, the application of standardized components has long since proven itself through enormous savings in time and costs where design, shipment and installation are concerned. This applies particularly to pipe clamps and clamp bases.

However, the general complexity of pipe systems requires an extremely wide range of applications for these components, which in special cases demands the use of special designs. For the technically correct solution it is necessary in such cases to rely on experienced professionals, who can offer tried-and-tested solutions and calculation processes.

Special designs

The standardized LISEGA program of pipe-surrounding support components is comprehensive and covers all general cases of applications, going well beyond the usual spectrum in this field. In spite of this, more complicated cases sometimes occur where only a special design can provide the best solution. Among other things, special designs are most often called for in the following situations:

- **unusually restricted spaces**
- **avoidance of interferences**
- **custom-made anchors**
- **exceptionally high load requirements**
- **special pipe diameters**
- **especially high temperatures (up to 1800°F [1000°C])**
- **larger insulation thicknesses**
- **unusual angles in piping**
- **special trunnion diameters**
- **twist restraints / shear lugs**

LISEGA's customers are not left alone in such situations. For these special problem cases, an experienced team of technicians and engineers is on hand, ready to react rapidly and flexibl with the right solutions. They are backed up by a range of computer software programs developed in-house. On top of this, a broad repertoire of tried-and-tested basic designs is available.

There's no problem that can't be solved – this conviction is powerful motivation for LISEGA's experts. We are happy to give our customers proof of this at any time!

Support for a vertical pipe section with special design type 45

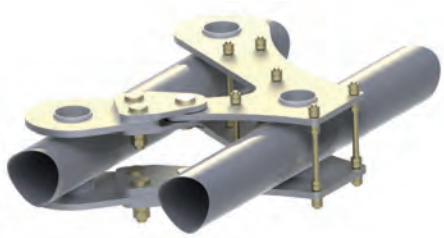

LISEGA triple joint (special design)

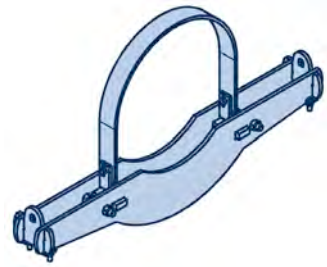

Special design type 40

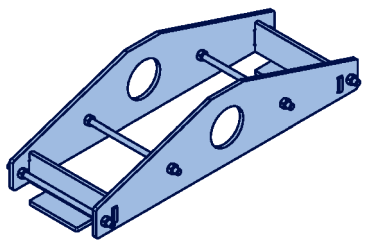

Special design type 48 (seated)

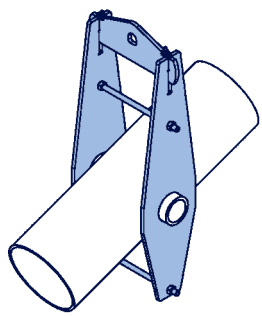

Special design type 48 for an angulating pipe system

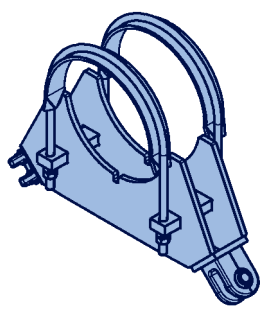

Special design type 38

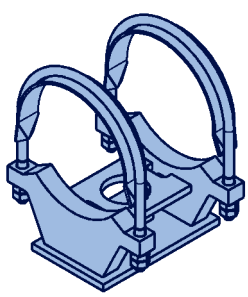

Special design type 49 with displacement control

Selection of pipe clamps and clamp bases

The following points are important for application:

1 All data needed for determination of the correct component and a clearly defined order are outlined in the selection tables.

2 The connection geometries are compatible with those of the LISEGA connection components. Due to the wide load application range, connection components from several LISEGA load groups can be attached.

The dimensions and geometries listed in the selection tables can vary slightly as regards design: The permissible loads apply as shown.

3 The lengths of the connecting lugs are so designed that the connection points always lie outside the economical insulation thicknesses.

4 All pipe clamps and clamp bases can be fitted with corresponding stainless steel inlay plates for use with pipe systems made of austenitic materials. These components can be found on page 4.7.

5 When selecting a suitable pipe clamp the **following sequence** is to be followed:

5.1 Determination of the relevant page for the outer diameter (OD) of the pipe system to be supported. The normal pipe tolerances are covered.

5.2 Determination of the relevant temperature range in the column for the desired support type, horizontal or vertical.

5.3 Determination of the permissible load to be covered. The permissible operational load taken from the selection table must not be exceeded at any time. The linear interpolation of the permissible load for intermediate temperatures is allowed.

5.4 Checking of installation dimension E and width B for agreement with the installation conditions on site. The dimensions can be taken from the selection tables.

5.5 Checking of the span width in riser clamps (L DIM.).

5.6 Decision as to whether trunnions or shear lugs are to be used for riser clamps type 46/48.

5.7 Agreement of the connection with the load chain required can be checked via the LISEGA load group ranges.

5.8 Specify the component selected by entering the relevant LISEGA type number.

6 When selecting a suitable clamp base the points 5.1 – 5.4 should be followed.

Attention must also be paid to selection of the correct height (dimension H) which depends on the thickness of the insulation.

6.1 The heights specified (dimension H) and the lengths (dimension A) are standard dimensions (see selection tables) and cover the most common cases of application. If required, the components can be supplied with different dimensions.

7 Pipe clamps and clamp bases can be supplied as special designs for unusual applications and conditions (see pages 4.6 to 4.9 for this).

8 In the design and construction of LISEGA pipe clamps and clamp bases, their application in cases of increased requirements was also taken into account. In accordance with the LISEGA quality management system, separate manufacturing is required for this. The type designation thereby changes in the 5th digit by addition of a 5 (see also pages 0.7 and 0.8 on this).

The selection tables on the following pages offer an overview of the fields of application. They are classified in rising stages according to pipe diameters. All pipe clamps and clamp bases coming into consideration for a planned pipe system can therefore be found on one page. The high-temperature range (1110°F – 1200°F [600°C – 650°C) is included as a supplementary section. The shown loads of the LISEGA pipe clamps consider a force applied conically below 4°.

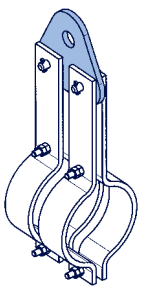

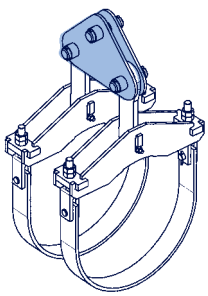

By coupling two pipe clamps with connection plates type 77 the loads can be doubled. A selection can be found on page 4.67.

Selection table
OD 0.84" [21.3mm]

Temp. of medium >1110°F
from page 4.52

Load doubling via type 77,
see page 4.67

Pipe clamps, clamp bases, OD 0.84" [21.3mm] (ND 15/ 1/2"), type 42, 43, 45, 49

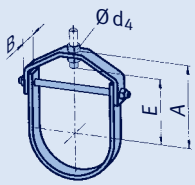

type	permissible load [lbs x 1000] 210	480	660	840	930	950	985	1040	1075	1110°F	d_4	E	A	B	weight [lbs]	load group
42 01 17	0.56										0.41	0.87	1.69	1.02	0.3	C-D

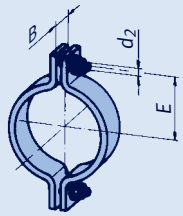

type	permissible load [lbs x 1000] 210	480	660	840	930	950	985	1040	1075	1110°F	d_2	E	B	weight [lbs]	load group
42 01 19	1.19	0.9	0.65								0.40	1.10	1.18	0.7	C-2
Heat-resistant materials, see pages 0.9 and 4.4															

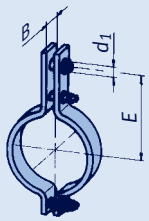

type	permissible load [lbs x 1000] 210	480	660	840	930	950	985	1040	1075	1110°F	d_1	E	B	weight [lbs]	load group
43 01 19	1.37	1.06	0.76								0.48	3.94	1.18	1.1	C-2
43 01 39			1.30	1.17	0.97	0.81	0.52	0.27			0.48	5.31	1.18	1.3	C-2
43 01 49					1.51	1.33	1.01	0.63	0.47	0.34	0.48	5.31	1.18	1.3	C-2

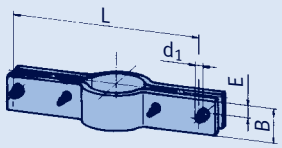

type	permissible load [lbs x 1000] 210	480	660	840	930	950	985	1040	1075	1110°F	d_1	E	B	L	weight [lbs]	load group
45 01 11	0.99	0.81	0.56								0.48	0.98	1.97	9.84	4.8	C-4
45 01 11	0.83	0.65	0.47								0.48	0.98	1.97	11.81	5.5	C-4
45 01 11	0.61	0.49	0.34								0.48	0.98	1.97	15.75	7.0	C-4
45 01 11	0.47	0.38	0.27								0.48	0.98	1.97	19.69	8.4	C-4
45 01 11	0.43	0.31	0.22								0.48	0.98	1.97	23.62	9.7	C-4
45 01 31	2.02	1.71	1.46	1.26	1.10	0.90	0.58	0.29			0.48	0.98	2.76	11.81	9.3	C-4
45 01 31	1.48	1.26	1.08	0.92	0.81	0.67	0.43	0.22			0.48	0.98	2.76	15.75	11.7	C-4
45 01 31	1.17	0.99	0.85	0.74	0.63	0.52	0.34	0.18			0.48	0.98	2.76	19.69	14.1	C-4
45 01 31	0.97	0.83	0.70	0.61	0.52	0.43	0.27	0.13			0.48	0.98	2.76	23.62	16.5	C-4
45 01 41	1.96	1.75	1.64	1.44	1.10	0.97	0.72	0.45	0.34	0.25	0.48	0.98	2.76	11.81	9.3	C-4
45 01 41	1.44	1.30	1.21	1.06	0.81	0.72	0.54	0.34	0.25	0.18	0.48	0.98	2.76	15.75	11.7	C-4
45 01 41	1.12	1.01	0.94	0.83	0.63	0.56	0.43	0.27	0.18	0.13	0.48	0.98	2.76	19.69	14.1	C-4
45 01 41	0.94	0.83	0.79	0.67	0.52	0.45	0.34	0.22	0.16	0.11	0.48	0.98	2.76	23.62	16.5	C-4

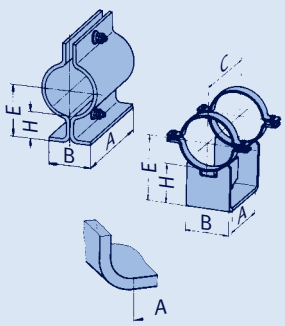

type	permissible load [lbs x 1000] 210	480	660	840	930	950	985	1040	1075	1110°F	E	A	B	C	H	weight [lbs]
49 01 11	0.25	0.18	0.13								2.40	3.94	1.57	–	1.97	1.3
49 01 12	0.36	0.27	0.20								4.37	5.91	2.56	–	3.94	2.9
49 01 25	0.83	0.63	0.54	0.43	0.40						4.37	6.89	2.76	9.06	3.94	3.5
49 01 35	0.94	0.85	0.72	0.63	0.58	0.58	0.56	0.38			6.34	6.89	3.94	9.06	5.91	5.1
49 01 45	1.14	1.03	0.99	0.88	0.83	0.81	0.76	0.52	0.38	0.29	6.34	6.89	3.94	9.06	5.91	5.9

Selection table
OD 1.06" [26.9mm]

Temp. of medium >1110°F
from page 4.52

Load doubling via type 77,
see page 4.67

Pipe clamps, clamp bases, OD 1.06" [26.9mm] (ND 20/ 3/4"), type 42, 43, 45, 49

	permissible load [lbs x 1000]														weight	load
type	210	480	660	840	930	950	985	1040	1075	1110°F	d_4	E	A	B	[lbs]	group
42 02 17	0.56										0.41	0.98	1.89	1.02	0.3	C-D

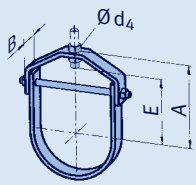

	permissible load [lbs x 1000]													weight	load
type	210	480	660	840	930	950	985	1040	1075	1110°F	d_2	E	B	[lbs]	group
42 02 19	1.19	0.9	0.65								0.40	1.30	1.18	0.7	C-2
Heat-resistant materials, see pages 0.9 and 4.4															

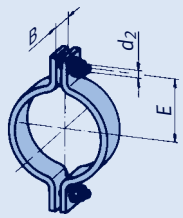

	permissible load [lbs x 1000]													weight	load
type	210	480	660	840	930	950	985	1040	1075	1110°F	d_1	E	B	[lbs]	group
43 02 19	1.37	1.06	0.76								0.48	4.33	1.18	1.1	C-2
43 02 39			1.30	1.17	0.97	0.81	0.52	0.27			0.48	5.31	1.18	1.3	C-2
43 02 49					1.51	1.33	1.01	0.63	0.47	0.34	0.48	5.31	1.18	1.3	C-2

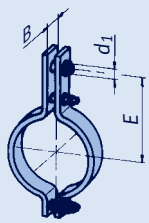

	permissible load [lbs x 1000]														weight	load
type	210	480	660	840	930	950	985	1040	1075	1110°F	d_1	E	B	L	[lbs]	group
45 02 11	1.03	0.83	0.58								0.48	0.98	1.97	9.84	4.8	C-4
45 02 11	0.83	0.67	0.47								0.48	0.98	1.97	11.81	5.5	C-4
45 02 11	0.61	0.49	0.36								0.48	0.98	1.97	15.75	7.0	C-4
45 02 11	0.49	0.38	0.27								0.48	0.98	1.97	19.69	8.4	C-4
45 02 11	0.40	0.31	0.22								0.48	0.98	1.97	23.62	9.7	C-4
45 02 31	2.09	1.75	1.51	1.30	1.12	0.92	0.61	0.31			0.48	0.98	2.76	11.81	9.3	C-4
45 02 31	1.53	1.28	1.10	0.94	0.83	0.67	0.45	0.22			0.48	0.98	2.76	15.75	11.7	C-4
45 02 31	1.19	1.01	0.85	0.74	0.65	0.54	0.34	0.18			0.48	0.98	2.76	19.69	14.1	C-4
45 02 31	0.99	0.83	0.72	0.61	0.54	0.45	0.27	0.13			0.48	0.98	2.76	23.62	16.5	C-4
45 02 41	2.00	1.82	1.69	1.46	1.12	0.99	0.74	0.47	0.34	0.25	0.48	0.98	2.76	11.81	9.3	C-4
45 02 41	1.46	1.33	1.24	1.08	0.83	0.72	0.54	0.34	0.25	0.18	0.48	0.98	2.76	15.75	11.7	C-4
45 02 41	1.15	1.03	0.97	0.83	0.65	0.56	0.43	0.27	0.20	0.13	0.48	0.98	2.76	19.69	14.1	C-4
45 02 41	0.94	0.85	0.79	0.70	0.54	0.47	0.36	0.22	0.16	0.11	0.48	0.98	2.76	23.62	16.5	C-4

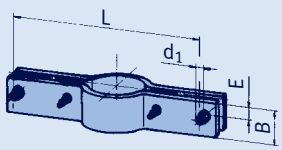

	permissible load [lbs x 1000]															weight
type	210	480	660	840	930	950	985	1040	1075	1110°F	E	A	B	C	H	[lbs]
49 02 11	0.25	0.18	0.13								2.48	3.94	1.57	–	1.97	1.3
49 02 12	0.36	0.27	0.20								4.45	5.91	2.56	–	3.94	3.1
49 02 25	0.83	0.63	0.54	0.43	0.40						4.45	6.89	2.76	9.06	3.94	3.5
49 02 35	0.97	0.85	0.74	0.63	0.61	0.58	0.58	0.38			6.42	6.89	3.94	9.06	5.91	5.1
49 02 45	1.14	1.03	0.99	0.90	0.83	0.83	0.76	0.52	0.40	0.29	6.42	6.89	3.94	9.06	5.91	5.9

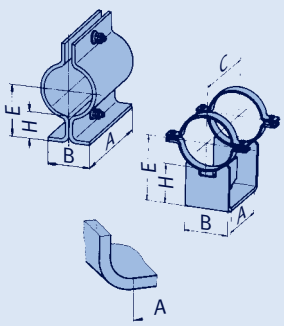

Selection table
OD 1.33" [33.7mm]

Temp. of medium >1110°F from page 4.52

Load doubling via type 77, see page 4.67

Pipe clamps, clamp bases, OD 1.33" [33.7mm] (ND 25/1"), type 42, 43, 45, 49

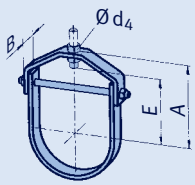

	permissible load [lbs x 1000]														weight	load
type	210	480	660	840	930	950	985	1040	1075	1110°F	d_4	E	A	B	[lbs]	group
42 03 17	0.56										0.41	1.26	2.13	1.02	0.4	C-D

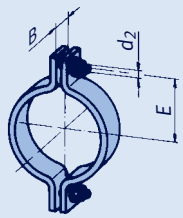

	permissible load [lbs x 1000]														weight	load
type	210	480	660	840	930	950	985	1040	1075	1110°F	d_2	E	B		[lbs]	group
42 03 19	1.19	0.9	0.65								0.40	1.42	1.18		0.9	C-2
Heat-resistant materials, see pages 0.9 and 4.4																

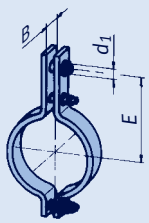

	permissible load [lbs x 1000]														weight	load
type	210	480	660	840	930	950	985	1040	1075	1110°F	d_1	E	B		[lbs]	group
43 03 19	1.37	1.06	0.76								0.48	4.72	1.18		1.3	C-2
43 03 39		1.46	1.30	1.17	0.97	0.81	0.52	0.27			0.48	6.50	1.18		1.8	C-2
43 03 49				1.51	1.51	1.51	1.19	0.76	0.56	0.40	0.48	6.50	1.57		2.4	C-2

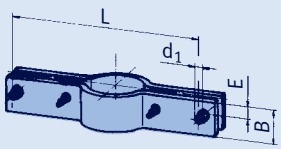

	permissible load [lbs x 1000]														weight	load
type	210	480	660	840	930	950	985	1040	1075	1110°F	d_1	E	B	L	[lbs]	group
45 03 11	1.30	1.03	0.74								0.48	0.98	2.36	9.84	5.9	C-4
45 03 11	1.06	0.85	0.61								0.48	0.98	2.36	11.81	6.6	C-4
45 03 11	0.76	0.61	0.45								0.48	0.98	2.36	15.75	8.4	C-4
45 03 11	0.58	0.49	0.34								0.48	0.98	2.36	19.69	9.9	C-4
45 03 11	0.49	0.40	0.29								0.48	0.98	2.36	23.62	11.7	C-4
45 03 31	2.16	1.82	1.55	1.35	1.17	0.97	0.63	0.31			0.48	0.98	2.76	11.81	9.3	C-4
45 03 32	2.25	2.25	2.20	2.09	2.02	2.02	2.00	1.64			0.48	0.98	3.54	11.81	22.5	C-4
45 03 31	1.55	1.33	1.12	0.97	0.83	0.70	0.45	0.22			0.48	0.98	2.76	15.75	11.7	C-4
45 03 32	2.25	2.25	2.20	2.09	2.02	2.02	2.00	1.19			0.48	0.98	3.54	15.75	28.6	C-4
45 03 31	1.21	1.03	0.88	0.76	0.65	0.54	0.36	0.18			0.48	0.98	2.76	19.69	14.1	C-4
45 03 32	2.25	2.25	2.20	2.09	2.02	2.02	1.84	0.94			0.48	0.98	3.54	19.69	34.8	C-4
45 03 31	1.01	0.85	0.72	0.63	0.54	0.45	0.29	0.13			0.48	0.98	2.76	23.62	16.5	C-4
45 03 32	2.25	2.25	2.20	2.09	2.02	2.02	1.53	0.79			0.48	0.98	3.54	23.62	41.2	C-4
45 03 41	2.09	1.87	1.75	1.53	1.17	1.03	0.79	0.49	0.36	0.27	0.48	0.98	2.76	11.81	9.3	C-4
45 03 42							2.00	1.96	1.84	1.37	0.48	0.98	3.54	11.81	22.5	C-4
45 03 41	1.51	1.35	1.26	1.10	0.85	0.74	0.56	0.36	0.25	0.18	0.48	0.98	2.76	15.75	11.7	C-4
45 03 42							2.00	1.82	1.35	1.01	0.48	0.98	3.54	15.75	28.6	C-4
45 03 41	1.17	1.06	0.99	0.85	0.67	0.58	0.43	0.27	0.20	0.13	0.48	0.98	2.76	19.69	14.1	C-4
45 03 42						2.02	2.00	1.44	1.06	0.79	0.48	0.98	3.54	19.69	34.8	C-4
45 03 41	0.97	0.88	0.81	0.70	0.54	0.47	0.36	0.22	0.16	0.11	0.48	0.98	2.76	23.62	16.5	C-4
45 03 42						2.02	1.89	1.19	0.88	0.65	0.48	0.98	3.54	23.62	41.2	C-4

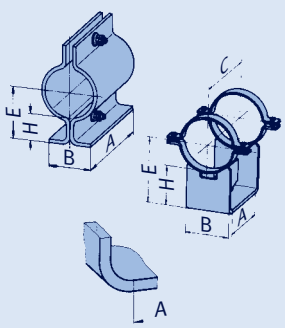

	permissible load [lbs x 1000]															weight
type	210	480	660	840	930	950	985	1040	1075	1110°F	E	A	B	C	H	[lbs]
49 03 11	0.25	0.18	0.13								2.64	3.94	1.77	–	1.97	0.7
49 03 12	0.36	0.27	0.20								4.61	5.91	2.76	–	3.94	1.5
49 03 25	0.74	0.63	0.54	0.43	0.40						6.57	6.89	4.02	9.06	5.91	2.3
49 03 35	1.03	0.92	0.79	0.67	0.63	0.63	0.61	0.43			6.57	6.89	4.02	9.06	5.91	2.4
49 03 45	1.14	1.03	0.99	0.9	0.83	0.83	0.76	0.52	0.40	0.29	6.57	6.89	4.02	9.06	5.91	2.8

Selection table OD 1.67" [42.4mm]

Temp. of medium >1110°F from page 4.52

Load doubling via type 77, see page 4.67

Pipe clamps, clamp bases, OD 1.67" [42.4mm] (ND 32/1 1/4"), type 42, 43, 45, 49

	permissible load [lbs x 1000]															
type	210	480	660	840	930	950	985	1040	1075	1110°F	d_4	E	A	B	weight [lbs]	load group
42 04 17	0.56										0.41	1.77	2.60	1.02	0.4	C-D

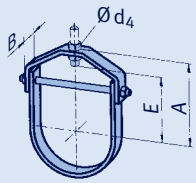

	permissible load [lbs x 1000]															
type	210	480	660	840	930	950	985	1040	1075	1110°F	d_2	E	B	weight [lbs]	load group
42 04 19	1.19	0.9	0.65								0.40	1.57	1.18	0.9	C-2
Heat-resistant materials, see pages 0.9 and 4.4															

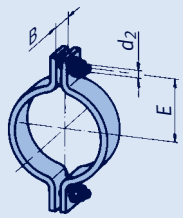

	permissible load [lbs x 1000]															
type	210	480	660	840	930	950	985	1040	1075	1110°F	d_1	E	B	weight [lbs]	load group
43 04 19	1.37	1.06	0.76								0.48	5.31	1.18	1.5	C-2
43 04 39	1.51	1.46	1.30	1.17	0.97	0.81	0.52	0.27			0.48	7.09	1.18	2.0	C-2
43 04 49			1.51	1.51	1.51	1.51	1.19	0.76	0.56	0.40	0.48	7.09	1.57	2.6	C-2

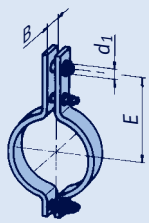

	permissible load [lbs x 1000]															
type	210	480	660	840	930	950	985	1040	1075	1110°F	d_1	E	B	L	weight [lbs]	load group
45 04 11	2.02	1.62	1.15								0.48	0.98	2.76	11.81	9	C-4
45 04 11	1.46	1.17	0.83								0.48	0.98	2.76	15.75	12	C-4
45 04 11	1.15	0.90	0.65								0.48	0.98	2.76	19.69	14	C-4
45 04 11	0.92	0.74	0.54								0.48	0.98	2.76	23.62	17	C-4
45 04 39							1.12	0.63			0.48	0.98	2.76	13.78	16	C-D
45 04 31	4.05	3.37	2.92	2.47	2.25	1.89	1.24	0.63			0.63	1.18	2.76	13.78	16	1-4
45 04 32	5.40	5.40	5.17	4.95	4.95	4.72	2.92	1.60			0.63	1.18	3.94	13.78	30	1-4
45 04 39						1.12	0.92	0.47			0.48	0.98	2.76	17.72	20	C-D
45 04 31	3.15	2.70	2.25	1.98	1.71	1.42	0.92	0.47			0.63	1.18	2.76	17.72	20	1-4
45 04 32	5.40	5.40	5.17	4.72	4.27	3.60	2.25	1.21			0.63	1.18	3.94	17.72	36	1-4
45 04 39						1.12	0.74	0.38			0.48	0.98	2.76	21.65	23	C-D
45 04 31	2.47	2.16	1.84	1.60	1.37	1.15	0.74	0.38			0.63	1.18	2.76	21.65	23	1-4
45 04 32	5.40	5.17	4.50	3.82	3.37	2.92	1.91	0.97			0.63	1.18	3.94	21.65	43	1-4
45 04 39					1.12	0.97	0.63	0.31			0.48	0.98	2.76	25.59	27	C-D
45 04 31	2.14	1.80	1.55	1.33	1.15	0.97	0.63	0.31			0.63	1.18	2.76	25.59	27	1-4
45 04 32	5.17	4.27	3.82	3.15	2.92	2.25	1.60	0.81			0.63	1.18	3.94	25.59	50	1-4
45 04 41					2.23	2.02	1.53	0.97	0.72	0.54	0.48	0.98	2.76	13.78	15	C-4
45 04 42					4.95	4.95	3.82	2.25	1.82	1.35	0.63	1.18	3.94	13.78	30	1-4
45 04 41			2.25	2.25	1.73	1.53	1.15	0.72	0.54	0.40	0.48	0.98	2.76	17.72	19	C-4
45 04 42			5.17	4.95	4.27	3.82	2.92	1.87	1.37	1.03	0.63	1.18	3.94	17.72	36	1-4
45 04 41	2.25	2.23	2.07	1.80	1.39	1.21	0.92	0.58	0.43	0.31	0.48	0.98	2.76	21.65	23	C-4
45 04 42	5.40	5.40	4.95	4.27	3.37	2.92	2.25	1.48	1.10	0.83	0.63	1.18	3.94	21.65	43	1-4
45 04 41	2.05	1.87	1.73	1.51	1.17	1.01	0.76	0.49	0.36	0.27	0.48	0.98	2.76	25.59	26	C-4
45 04 42	4.95	4.50	4.27	3.60	2.92	2.47	1.98	1.24	0.92	0.70	0.63	1.18	3.94	25.59	50	1-4

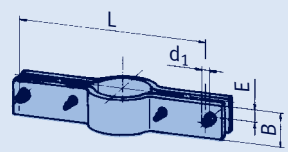

	permissible load [lbs x 1000]															
type	210	480	660	840	930	950	985	1040	1075	1110°F	E	A	B	C	H	weight [lbs]
49 04 11	0.25	0.18	0.13								2.80	3.94	1.77	–	1.97	1.5
49 04 12	0.36	0.27	0.20								4.76	5.91	2.76	–	3.94	3.5
49 04 25	0.74	0.65	0.54	0.45	0.40						6.73	6.89	4.02	9.06	5.91	5.3
49 04 35	1.06	0.94	0.81	0.70	0.65	0.65	0.63	0.43			6.73	6.89	4.02	9.06	5.91	5.3
49 04 45	1.16	1.06	1.01	0.90	0.85	0.83	0.79	0.54	0.40	0.29	6.73	6.89	4.02	9.06	5.91	6.4

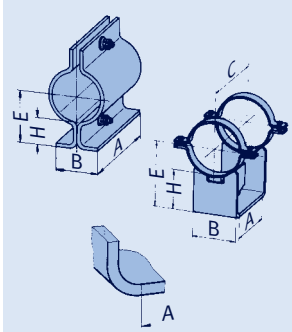

Selection table
OD 1.90" [48.3mm]

Temp. of medium >1110°F from page 4.52

Load doubling via type 77, see page 4.67

Pipe clamps, clamp bases, OD 1.90" [48.3mm] (ND 40/1 1/2"), type 42, 43, 45, 49

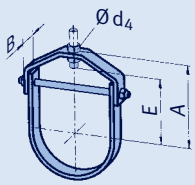

type	permissible load [lbs x 1000] 210	480	660	840	930	950	985	1040	1075	1110°F	d_4	E	A	B	weight [lbs]	load group
42 05 17	0.56										0.41	2.13	3.03	1.02	0.6	C-D

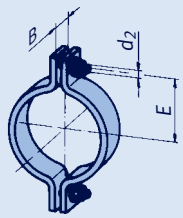

type	permissible load [lbs x 1000] 210	480	660	840	930	950	985	1040	1075	1110°F	d_2	E	B	weight [lbs]	load group
42 05 19	1.19	0.9	0.65								0.40	1.77	1.18	0.9	C-2
Heat-resistant materials, see pages 0.9 and 4.4															

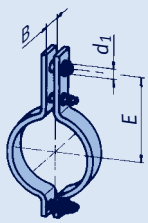

type	permissible load [lbs x 1000] 210	480	660	840	930	950	985	1040	1075	1110°F	d_1	E	B	weight [lbs]	load group
43 05 19	1.37	1.06	0.76								0.48	5.51	1.18	1.5	C-2
43 05 39	1.51	1.46	1.26	1.08	0.97	0.81	0.52	0.27			0.48	7.28	1.18	2.0	C-2
43 05 49		1.51	1.51	1.51	1.51	1.51	1.19	0.76	0.56	0.40	0.48	7.28	1.57	2.6	C-2

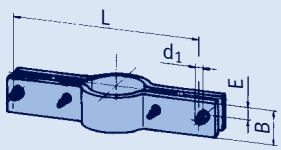

type	permissible load [lbs x 1000] 210	480	660	840	930	950	985	1040	1075	1110°F	d_1	E	B	L	weight [lbs]	load group
45 05 11	2.25	1.82	1.30								0.48	0.98	3.15	11.81	11	C-4
45 05 11	1.73	1.33	0.94								0.48	0.98	3.15	15.75	14	C-4
45 05 11	1.33	1.03	0.74								0.48	0.98	3.15	19.69	16	C-4
45 05 11	1.10	0.83	0.61								0.48	0.98	3.15	23.62	19	C-4
45 05 39							1.12	0.74			0.48	0.98	3.15	13.78	18	C-D
45 05 31	4.95	4.05	3.60	2.92	2.70	2.23	1.46	0.74			0.63	1.18	3.15	13.78	18	1-4
45 05 32	5.40	5.40	5.17	4.95	4.95	4.95	3.82	2.00			0.63	1.18	4.72	13.78	35	1-4
45 05 39						1.12	1.10	0.56			0.48	0.98	3.15	17.72	22	C-D
45 05 31	3.60	3.15	2.70	2.25	2.02	1.69	1.10	0.56			0.63	1.18	3.15	17.72	22	1-4
45 05 32	5.40	5.40	5.17	4.95	4.95	4.27	2.92	1.51			0.63	1.18	4.72	17.72	44	1-4
45 05 39						1.12	0.88	0.45			0.48	0.98	3.15	21.65	26	C-D
45 05 31	2.92	2.47	2.16	1.87	1.62	1.35	0.88	0.45			0.63	1.18	3.15	21.65	26	1-4
45 05 32	5.40	5.40	5.17	4.72	4.27	3.60	2.25	1.19			0.63	1.18	4.72	21.65	52	1-4
45 05 39					1.12	1.10	0.72	0.36			0.48	0.98	3.15	25.59	31	C-D
45 05 31	2.47	2.09	1.80	1.55	1.35	1.10	0.72	0.36			0.63	1.18	3.15	25.59	31	1-4
45 05 32	5.40	5.40	4.50	3.82	3.60	2.92	1.96	0.99			0.63	1.18	4.72	25.59	60	1-4
45 05 41						2.20	1.80	1.12	0.83	0.63	0.48	0.98	3.15	13.78	18	C-4
45 05 42						4.95	4.72	2.92	2.25	1.69	0.63	1.18	4.72	13.78	35	1-4
45 05 41				2.25	2.05	1.80	1.35	0.85	0.63	0.47	0.48	0.98	3.15	17.72	22	C-4
45 05 42					4.95	4.72	3.60	2.25	1.69	1.26	0.63	1.18	4.72	17.72	44	1-4
45 05 41		2.47	2.25	2.11	1.62	1.44	1.08	0.67	0.49	0.38	0.48	0.98	3.15	21.65	26	C-4
45 05 42			5.17	4.95	4.27	3.82	2.70	1.84	1.35	1.01	0.63	1.18	4.72	21.65	52	1-4
45 05 41	2.25	2.16	2.00	1.75	1.35	1.19	0.90	0.56	0.40	0.31	0.48	0.98	3.15	25.59	30	C-4
45 05 42		5.40	5.17	4.50	3.60	3.15	2.25	1.53	1.12	0.83	0.63	1.18	4.72	25.59	60	1-4

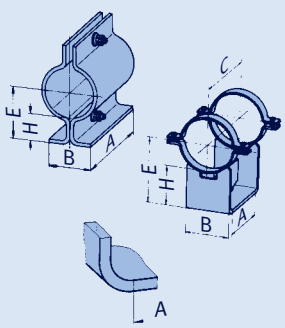

type	permissible load [lbs x 1000] 210	480	660	840	930	950	985	1040	1075	1110°F	E	A	B	C	H	weight [lbs]
49 05 11	0.25	0.18	0.13								2.91	3.94	1.97	–	1.97	1.8
49 05 12	0.36	0.27	0.20								4.88	5.91	2.95	–	3.94	3.7
49 05 25	0.74	0.65	0.54	0.45	0.40						6.85	6.89	4.02	9.06	5.91	5.3
49 05 35	1.06	0.94	0.81	0.70	0.65	0.65	0.63	0.43			6.85	6.89	4.02	9.06	5.91	5.5
49 05 45	1.19	1.08	1.01	0.90	0.85	0.83	0.79	0.54	0.40	0.29	6.85	6.89	4.02	9.06	5.91	6.4

Selection table OD 2.37" [60.3mm]

Temp. of medium >1110°F from page 4.52

Load doubling via type 77, see page 4.67

Pipe clamps, clamp bases, OD 2.37" [60.3mm] (ND 50/2"), type 42, 43, 45, 49

	permissible load [lbs x 1000]															
type	210	480	660	840	930	950	985	1040	1075	1110°F	d_4	E	A	B	weight [lbs]	load group
42 06 17	0.56										0.41	2.95	3.70	1.02	0.6	C-D

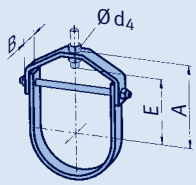

	permissible load [lbs x 1000]														
type	210	480	660	840	930	950	985	1040	1075	1110°F	d_2	E	B	weight [lbs]	load group
42 06 19	1.51	1.24	0.9								0.48	2.17	1.57	1.8	C-2
Heat-resistant materials, see pages 0.9 and 4.4															

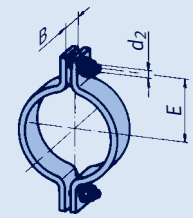

	permissible load [lbs x 1000]														
type	210	480	660	840	930	950	985	1040	1075	1110°F	d_1	E	B	weight [lbs]	load group
43 06 19	1.69	1.28	0.92								0.48	6.10	1.57	2.6	C-4
43 06 39	2.07	1.93	1.84	1.75	1.42	1.17	0.76	0.40			0.48	7.87	1.97	3.5	C-4
43 06 49						1.35	1.35	1.06	0.76	0.56	0.48	7.87	1.97	4.6	C-4

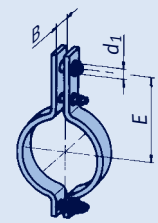

	permissible load [lbs x 1000]														
type	210	480	660	840	930	950	985	1040	1075	1110°F	d_1	E	B	L	weight [lbs]	load group
45 06 11	2.02	1.51	1.08								0.48	0.98	2.76	11.81	10	C-4
45 06 12	5.40	4.05	2.92								0.63	1.18	3.15	11.81	16	1-4
45 06 11	1.46	1.08	0.76								0.48	0.98	2.76	15.75	12	C-4
45 06 12	3.82	2.92	2.11								0.63	1.18	3.15	15.75	20	1-4
45 06 11	1.15	0.85	0.61								0.48	0.98	2.76	19.69	15	C-4
45 06 12	2.92	2.25	1.66								0.63	1.18	3.15	19.69	25	1-4
45 06 11	0.92	0.70	0.49								0.48	0.98	2.76	23.62	17	C-4
45 06 12	2.47	1.91	1.37								0.63	1.18	3.15	23.62	29	1-4
45 06 39							1.12	0.83			0.48	0.98	3.94	15.75	26	C-D
45 06 31	5.40	4.50	3.82	3.37	2.92	2.47	1.66	0.83			0.63	1.18	3.94	15.75	26	1-4
45 06 32	5.40	5.40	5.17	4.95	4.95	4.95	3.37	1.80			0.63	1.18	4.72	15.75	40	1-4
45 06 39							1.12	0.65			0.48	0.98	3.94	19.69	31	C-D
45 06 31	4.05	3.60	2.92	2.47	2.25	1.93	1.26	0.65			0.63	1.18	3.94	19.69	31	1-4
45 06 32	5.40	5.40	5.17	4.95	4.95	4.05	2.70	1.39			0.63	1.18	4.72	19.69	48	1-4
45 06 39						1.12	1.01	0.52			0.48	0.98	3.94	23.62	36	C-D
45 06 31	3.37	2.92	2.47	2.16	1.89	1.57	1.01	0.52			0.63	1.18	3.94	23.62	36	1-4
45 06 32	5.40	5.40	5.17	4.50	4.05	3.37	2.20	1.12			0.63	1.18	4.72	23.62	57	1-4
45 06 39						1.12	0.85	0.43			0.48	0.98	3.94	27.56	41	C-D
45 06 31	2.70	2.47	2.11	1.82	1.60	1.33	0.85	0.43			0.63	1.18	3.94	27.56	41	1-4
45 06 32	5.40	4.95	4.27	3.82	3.37	2.70	1.84	0.94			0.63	1.18	4.72	27.56	65	1-4
45 06 41						2.20	2.05	1.28	0.94	0.72	0.48	0.98	3.94	15.75	25	C-4
45 06 42						4.95	4.27	2.70	2.02	1.51	0.63	1.18	4.72	15.75	40	1-4
45 06 41					2.23	2.07	1.57	0.99	0.72	0.54	0.48	0.98	3.94	19.69	30	C-4
45 06 42					4.95	4.27	3.15	2.11	1.57	1.17	0.63	1.18	4.72	19.69	48	1-4
45 06 41			2.25	2.25	1.91	1.69	1.26	0.79	0.58	0.45	0.48	0.98	3.94	23.62	35	C-4
45 06 42			5.17	4.95	4.05	3.60	2.70	1.71	1.26	0.94	0.63	1.18	4.72	23.62	57	1-4
45 06 41		2.47	2.25	2.07	1.60	1.42	1.06	0.67	0.49	0.36	0.48	0.98	3.94	27.56	40	C-4
45 06 42	5.40	5.17	4.72	4.27	3.37	2.92	2.25	1.44	1.06	0.79	0.63	1.18	4.72	27.56	65	1-4

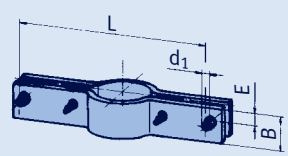

	permissible load [lbs x 1000]															
type	210	480	660	840	930	950	985	1040	1075	1110°F	E	A	B	C	H	weight [lbs]
49 06 11	0.27	0.20	0.16								3.15	5.91	1.97	–	1.97	2.9
49 06 12	0.38	0.29	0.20								5.12	7.87	2.95	–	3.94	5.3
49 06 25	0.90	0.76	0.63	0.52	0.47						7.09	8.66	4.33	11.22	5.91	7.7
49 06 35	1.06	0.94	0.81	0.70	0.65	0.65	0.63	0.43			7.09	8.66	4.33	11.22	5.91	7.9
49 06 45	1.48	1.35	1.28	1.15	1.08	1.06	0.99	0.67	0.52	0.36	7.09	8.66	4.33	11.42	5.91	9.3

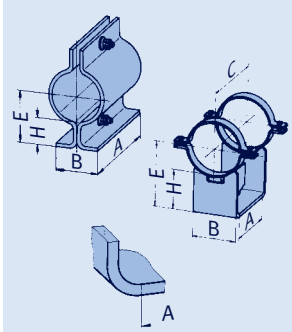

Selection table OD 2.87" [73mm]

Temp. of medium >1110°F from page 4.52

Load doubling via type 77, see page 4.67

Pipe clamps, clamp bases, OD 2.87" [73mm] (ND 65/2 1/2"), type 42, 43, 45, 46, 48, 49

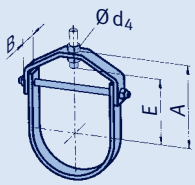

type	210	480	660	840	930	950	985	1040	1075	1110°F	d_4	E	A	B	weight [lbs]	load group
	permissible load [lbs x 1000]															
42 07 17	1.12										0.51	3.74	4.72	1.26	1.1	C-2

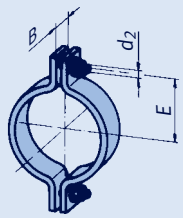

type	210	480	660	840	930	950	985	1040	1075	1110°F	d_2	E	B	weight [lbs]	load group
	permissible load [lbs x 1000]														
42 07 19	1.51	1.24	0.9								0.48	2.36	1.57	1.8	C-2
Heat-resistant materials, see pages 0.9 and 4.4															

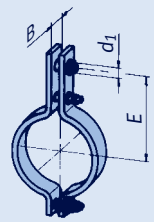

type	210	480	660	840	930	950	985	1040	1075	1110°F	d_1	E	B	weight [lbs]	load group
	permissible load [lbs x 1000]														
43 07 19	1.69	1.28	0.92								0.48	6.50	1.57	2.6	C-4
43 07 39	2.07	1.93	1.84	1.75	1.42	1.17	0.76	0.40			0.48	8.46	1.97	4.0	C-4
43 07 49					1.37	1.35	1.35	1.06	0.76	0.56	0.48	8.46	1.97	5.1	C-4

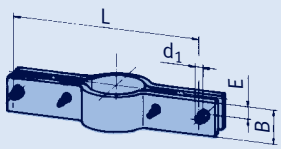

type	210	480	660	840	930	950	985	1040	1075	1110°F	d_1	E	B	L	weight [lbs]	load group
	permissible load [lbs x 1000]															
45 07 19			1.12								0.48	0.98	2.76	11.81	15	C-D
45 07 11	3.82	2.92	2.07								0.63	1.18	2.76	11.81	15	1-4
45 07 12	6.07	5.17	3.60								0.63	1.18	3.94	11.81	20	1-4
45 07 19			1.12								0.48	0.98	2.76	15.75	18	C-D
45 07 11	3.15	2.25	1.69								0.63	1.18	2.76	15.75	18	1-4
45 07 12	4.95	3.60	2.47								0.63	1.18	3.94	15.75	26	1-4
45 07 19			1.12								0.48	0.98	2.76	19.69	22	C-D
45 07 11	2.47	1.87	1.35								0.63	1.18	2.76	19.69	22	1-4
45 07 12	3.82	2.70	2.05								0.63	1.18	3.94	19.69	31	1-4
45 07 19		1.12	1.06								0.48	0.98	2.76	23.62	25	C-D
45 07 11	2.02	1.48	1.06								0.63	1.18	2.76	23.62	25	1-4
45 07 12	2.92	2.25	1.64								0.63	1.18	3.94	23.62	36	1-4

① type 46

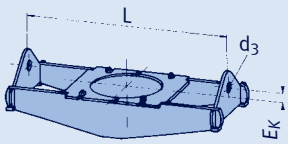

① type 48

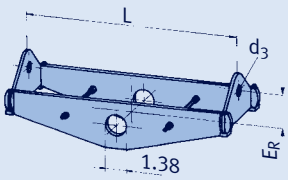

type	210	480	660	840	930	950	985	1040	1075	1110°F	d_3	L min	L max	E_K	type 46 [lbs min]	type 46 [lbs max]	E_R	type 48 [lbs min]	type 48 [lbs max]	load group
	permissible load [lbs x 1000]																			
4.①07 31	4.3	4.0	4.0	3.6	2.5	2.2	1.8	1.1			0.82	13.78	29.53	0.59	16	34	2.76	13	31	C-4
4. 07 32	4.9	4.7	4.7	4.5	3.4	2.9	2.2	1.5			0.82	13.78	29.53	0.98	16	36	2.95	15	35	C-4
4. 07 33	10.3	10.1	9.9	9.2	6.3	5.6	4.5	2.7			0.98	13.78	29.53	1.18	23	52	3.94	25	59	3-5
4. 07 41								1.6	1.2	0.9	0.82	13.78	29.53	0.59	16	34	2.76	14	35	C-4
4. 07 42								2.5	1.8	1.3	0.82	13.78	29.53	0.98	19	46	3.35	18	44	C-4
4. 07 43						5.6	5.4	4.0	2.9	2.2	0.98	13.78	29.53	1.18	27	61	4.53	24	60	3-5

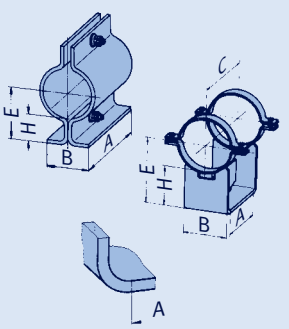

type	210	480	660	840	930	950	985	1040	1075	1110°F	E	A	B	C	H	weight [lbs]
	permissible load [lbs x 1000]															
49 07 11	0.27	0.20	0.16								3.43	5.91	2.17	–	1.97	3.3
49 07 12	0.38	0.29	0.20								5.39	7.87	3.15	–	3.94	5.7
49 07 25	0.90	0.76	0.63	0.52	0.47						7.36	8.66	4.33	11.22	5.91	8.1
49 07 35	1.57	1.42	1.24	1.03	0.97	0.97	0.94	0.58			7.36	8.66	4.33	11.22	5.91	8.4
49 07 45	2.13	1.93	1.84	1.66	1.53	1.53	1.30	0.85	0.63	0.45	7.36	8.66	4.33	11.42	5.91	9.5

Selection table OD 3.00" [76.1mm]

Temp. of medium >1110°F from page 4.52

Load doubling via type 77, see page 4.67

Pipe clamps, clamp bases, OD 3.00" [76.1mm] (ND 65/2 1/2"), type 42, 43, 45, 46, 48, 49

	permissible load [lbs x 1000]														weight	load
type	210	480	660	840	930	950	985	1040	1075	1110°F	d_4	E	A	B	[lbs]	group
42 08 17	1.12										0.51	3.74	4.72	1.26	1.2	C-2

	permissible load [lbs x 1000]													weight	load
type	210	480	660	840	930	950	985	1040	1075	1110°F	d_2	E	B	[lbs]	group
42 08 19	1.51	1.24	0.9								0.48	2.36	1.57	2	C-2
Heat-resistant materials, see pages 0.9 and 4.4															

	permissible load [lbs x 1000]													weight	load
type	210	480	660	840	930	950	985	1040	1075	1110°F	d_1	E	B	[lbs]	group
43 08 19	1.69	1.28	0.92								0.48	6.50	1.57	2.6	C-4
43 08 39	2.07	1.93	1.84	1.73	1.42	1.17	0.76	0.40			0.48	8.46	1.97	4.0	C-4
43 08 49				1.42	1.37	1.35	1.35	1.06	0.76	0.56	0.48	8.46	1.97	5.1	C-4

	permissible load [lbs x 1000]														weight	load
type	210	480	660	840	930	950	985	1040	1075	1110°F	d_1	E	B	L	[lbs]	group
45 08 19			1.12								0.48	0.98	2.76	11.81	15	C-D
45 08 11	3.82	2.92	2.07								0.63	1.18	2.76	11.81	15	1-4
45 08 12	6.07	5.17	3.60								0.63	1.18	3.94	11.81	21	1-4
45 08 19			1.12								0.48	0.98	2.76	15.75	18	C-D
45 08 11	3.15	2.25	1.69								0.63	1.18	2.76	15.75	18	1-4
45 08 12	4.95	3.60	2.47								0.63	1.18	3.94	15.75	26	1-4
45 08 19			1.12								0.48	0.98	2.76	19.69	22	C-D
45 08 11	2.47	1.87	1.35								0.63	1.18	2.76	19.69	22	1-4
45 08 12	3.82	2.70	2.05								0.63	1.18	3.94	19.69	31	1-4
45 08 19		1.12	1.06								0.48	0.98	2.76	23.62	26	C-D
45 08 11	2.02	1.48	1.06								0.63	1.18	2.76	23.62	26	1-4
45 08 12	2.92	2.25	1.64								0.63	1.18	3.94	23.62	36	1-4

	permissible load [lbs x 1000]											L			type 46			type 48		load
type	210	480	660	840	930	950	985	1040	1075	1110°F	d_3	min	max	E_K	[lbs min]	[lbs max]	E_R	[lbs min]	[lbs max]	group
4.①0831	4.3	4.0	4.0	3.6	2.5	2.2	1.8	1.1			0.82	13.78	29.53	0.59	16	34	2.76	13	31	C-4
4. 08 32	5.2	4.9	4.7	4.5	3.4	2.9	2.2	1.5			0.82	13.78	29.53	0.59	16	36	2.95	15	35	C-4
4. 08 33	10.6	10.1	9.9	9.2	6.3	5.6	4.5	2.7			0.98	13.78	29.53	1.18	23	55	3.94	25	59	3-5
4. 08 41								1.6	1.2	0.9	0.82	13.78	29.53	0.59	16	34	2.76	14	35	C-4
4. 08 42								2.5	1.8	1.3	0.82	13.78	29.53	0.98	19	46	3.35	18	44	C-4
4. 08 43						5.6	5.4	4.0	2.9	2.2	0.98	13.78	29.53	1.18	27	61	4.53	24	60	3-5

	permissible load [lbs x 1000]															weight
type	210	480	660	840	930	950	985	1040	1075	1110°F	E	A	B	C	H	[lbs]
49 08 11	0.27	0.20	0.16								3.46	5.91	2.17	–	1.97	3.3
49 08 12	0.38	0.29	0.20								5.43	7.87	3.15	–	3.94	5.7
49 08 25	0.87	0.76	0.63	0.52	0.47						7.40	8.66	4.33	11.22	5.91	8.1
49 08 35	1.57	1.42	1.21	1.03	0.97	0.97	0.94	0.58			7.40	8.66	4.33	11.22	5.91	8.4
49 08 45	2.18	1.98	1.89	1.71	1.57	1.55	1.33	0.88	0.63	0.47	7.40	8.66	4.33	11.42	5.91	9.5

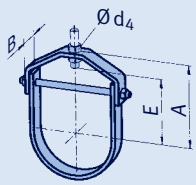

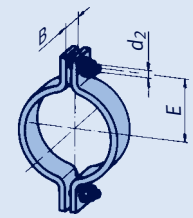

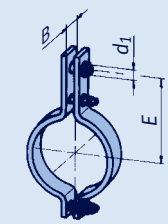

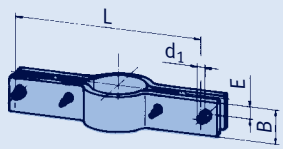

①type 46

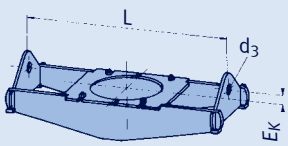

①type 48

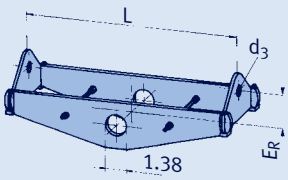

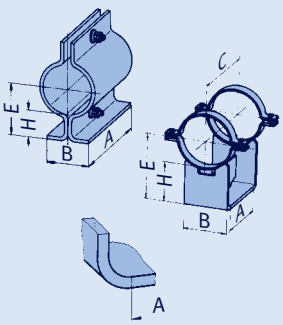

Selection table
OD 3.50" [88.9mm]

Temp. of medium >1110°F
from page 4.52

Load doubling via type 77,
see page 4.67

Pipe clamps, clamp bases, OD 3.50" [88.9mm] (ND 80/3"), type 42, 43, 45, 46, 48, 49

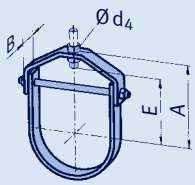

type	210	480	660	840	930	950	985	1040	1075	1110°F	d_4	E	A	B	weight [lbs]	load group
	permissible load [lbs x 1000]															
42 09 17	1.12										0.51	3.94	4.76	1.26	1.3	C-2

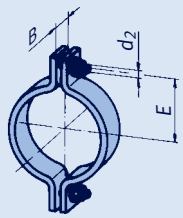

type	210	480	660	840	930	950	985	1040	1075	1110°F	d_2	E	B	weight [lbs]	load group
	permissible load [lbs x 1000]														
42 09 19	1.42	1.01	0.79								0.48	2.76	1.57	2.2	C-2
Heat-resistant materials, see pages 0.9 and 4.4															

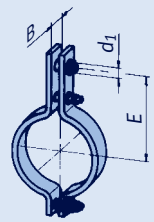

type	210	480	660	840	930	950	985	1040	1075	1110°F	d_1	E	B	weight [lbs]	load group
	permissible load [lbs x 1000]														
43 09 18	0.56	0.56	0.56								0.48	6.69	1.57	3.1	C-D
43 09 19	1.66	1.28	0.92								0.63	6.69	1.57	3.1	1-4
43 09 38			0.56	0.56	0.56	0.56	0.56	0.38			0.48	9.25	1.97	4.2	C-D
43 09 39	2.47	2.23	1.91	1.64	1.42	1.17	0.76	0.38			0.63	9.25	1.97	4.2	1-4
43 09 49					1.37	1.35	1.35	1.06	0.76	0.56	0.48	9.25	1.97	5.5	C-4

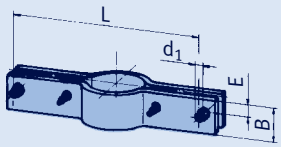

type	210	480	660	840	930	950	985	1040	1075	1110°F	d_1	E	B	L	weight [lbs]	load group
	permissible load [lbs x 1000]															
45 09 19			1.12								0.48	0.98	2.76	11.81	15	C-D
45 09 11	3.82	2.92	2.14								0.63	1.18	2.76	11.81	15	1-4
45 09 12	6.07	5.17	3.60								0.63	1.18	3.94	11.81	21	1-4
45 09 19			1.12								0.48	0.98	2.76	17.72	20	C-D
45 09 11	2.70	2.00	1.44								0.63	1.18	2.76	17.72	20	1-4
45 09 12	4.27	3.15	2.25								0.63	1.18	3.94	17.72	29	1-4
45 09 19		1.12	0.83								0.48	0.98	2.76	23.62	26	C-D
45 09 11	2.02	1.48	1.06								0.63	1.18	2.76	23.62	26	1-4
45 09 12	2.92	2.25	1.64								0.63	1.18	3.94	23.62	36	1-4
45 09 19		1.12	0.83								0.48	0.98	2.76	29.53	31	C-D
45 09 11	1.60	1.17	0.83								0.63	1.18	2.76	29.53	31	1-4
45 09 12	2.25	1.78	1.26								0.63	1.18	3.94	29.53	44	1-4

① type 46

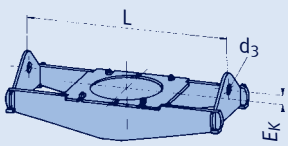

① type 48

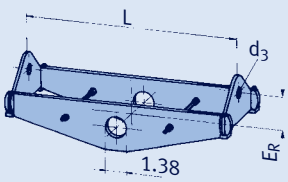

type	210	480	660	840	930	950	985	1040	1075	1110°F	d_3	L min	L max	type 46 E_K	type 46 [lbs min]	type 46 [lbs max]	type 48 E_R	type 48 [lbs min]	type 48 [lbs max]	load group
	permissible load [lbs x 1000]																			
4.①0931	3.8	3.6	3.6	3.4	2.5	2.2	1.8	1.1			0.82	13.78	33.46	0.59	17	39	2.95	12	36	C-4
4. 09 32	4.9	4.7	4.5	4.5	3.4	2.9	2.2	1.5			0.82	13.78	33.46	0.98	17	43	3.35	14	43	C-4
4. 09 33	10.1	9.9	9.4	9.0	6.3	5.6	4.5	2.7			0.98	13.78	33.46	1.38	23	66	3.94	24	71	3-5
4. 09 41								1.6	1.2	0.9	0.82	13.78	33.46	0.59	17	40	2.95	14	43	C-4
4. 09 42								2.2	1.8	1.3	0.82	13.78	33.46	0.98	19	54	3.94	18	54	C-4
4. 09 43					6.1	6.1	5.8	4.3	3.1	2.2	0.98	13.78	33.46	1.38	26	75	4.13	23	74	3-5

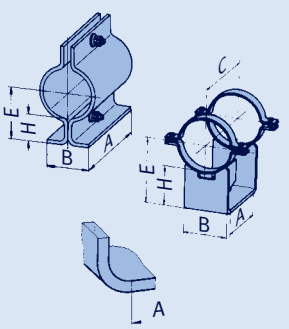

type	210	480	660	840	930	950	985	1040	1075	1110°F	E	A	B	C	H	weight [lbs]
	permissible load [lbs x 1000]															
49 09 11	0.40	0.31	0.22								3.70	5.91	2.36	–	1.97	5.1
49 09 12	0.56	0.43	0.29								5.67	7.87	3.35	–	3.94	8.4
49 09 25	0.87	0.76	0.63	0.52	0.47						9.61	10.63	5.75	13.39	7.87	11.9
49 09 35	1.57	1.42	1.21	1.03	0.97	0.97	0.94	0.58			9.61	10.63	5.75	13.39	7.87	12.8
49 09 45	2.27	2.00	1.89	1.71	1.57	1.55	1.46	1.01	0.74	0.54	9.61	10.63	5.75	13.39	7.87	14.8

Selection table OD 4.25" [108mm]

Temp. of medium >1110°F from page 4.52

Load doubling via type 77, see page 4.67

4

Pipe clamps, clamp bases, OD 4.25" [108mm] (ND 100/4"), type 42, 43, 45, 46, 48, 49

	permissible load [lbs x 1000]														
type	210	480	660	840	930	950	985	1040	1075	1110°F	d_2	E	B	weight [lbs]	load group
42 10 19	2.25	1.75	1.35								0.63	3.54	1.97	4.4	1-4
Heat-resistant materials, see pages 0.9 and 4.4															

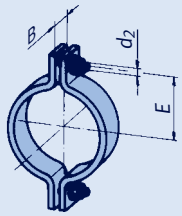

	permissible load [lbs x 1000]														
type	210	480	660	840	930	950	985	1040	1075	1110°F	d_1	E	B	weight [lbs]	load group
43 10 18	0.56	0.56	0.56								0.48	7.87	1.97	5.5	C-D
43 10 19	2.25	1.87	1.35								0.63	7.87	1.97	5.5	1-4
43 10 29			0.74	0.63	0.45						0.48	9.45	1.57	2.9	C-4
43 10 38				0.56	0.56	0.56	0.56	0.54			0.48	10.63	1.97	6.6	C-D
43 10 39			2.47	2.25	1.93	1.60	1.03	0.54			0.63	10.63	1.97	6.6	1-4
43 10 48							0.56	0.56	0.56	0.56	0.48	10.63	2.76	9.0	C-D
43 10 49	3.37	3.15	3.15	2.92	2.92	2.92	2.70	1.75	1.28	0.97	0.63	10.63	2.76	9.0	1-4

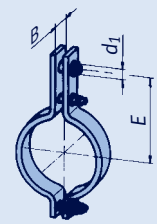

	permissible load [lbs x 1000]														
type	210	480	660	840	930	950	985	1040	1075	1110°F	d_1	E	B	L	weight [lbs]	load group
45 10 19			1.12								0.48	0.98	3.15	13.78	19	C-D
45 10 11	3.82	2.92	2.18								0.63	1.18	3.15	13.78	19	1-4
45 10 19			1.12								0.48	0.98	3.15	19.69	26	C-D
45 10 11	2.70	2.09	1.51								0.63	1.18	3.15	19.69	26	1-4
45 10 19			1.12								0.48	0.98	3.15	25.59	32	C-D
45 10 11	2.11	1.57	1.12								0.63	1.18	3.15	25.59	32	1-4
45 10 19		1.12	0.90								0.48	0.98	3.15	31.50	38	C-D
45 10 11	1.69	1.26	0.90								0.63	1.18	3.15	31.50	38	1-4

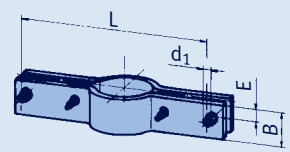

① type 46

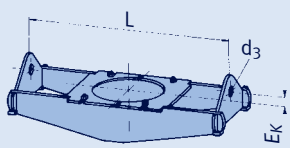

	permissible load [lbs x 1000]										L		type 46			type 48		load
type	210	480	660	840	930	950	985	1040	1075	1110°F	d_3	min	max	E_K	[lbs min]	[lbs max]	E_R	[lbs min]	[lbs max]	group
4.① 1012	4.3	3.1	2.2								0.98	13.78	31.50	0.20	18	41	2.76	14	37	3-5
4. 10 31	4.9	4.9	4.7	4.5	3.6	3.4	2.5	1.5			0.82	13.78	37.40	0.59	19	55	3.35	18	54	C-4
4. 10 32	8.8	8.3	8.3	7.6	5.2	4.7	3.6	2.2			0.98	13.78	37.40	0.98	24	70	3.35	24	75	3-5
4. 10 33	15.5	14.8	14.4	13.5	9.0	8.3	6.5	4.0			1.33	13.78	37.40	1.38	39	99	4.72	36	102	3-6
4. 10 41								2.2	1.8	1.3	0.82	13.78	37.40	0.59	21	64	3.94	21	64	C-4
4. 10 42								3.1	2.2	1.8	0.98	13.78	37.40	0.98	26	75	4.33	24	76	3-5
4. 10 43							6.1	5.8	4.5	3.4	1.33	13.78	37.40	1.38	38	116	5.12	34	110	3-6

① type 48

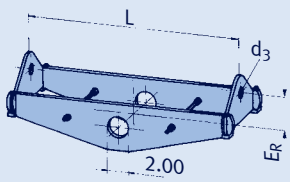

	permissible load [lbs x 1000]															
type	210	480	660	840	930	950	985	1040	1075	1110°F	E	A	B	C	H	weight [lbs]
49 10 11	0.52	0.40	0.29								6.06	5.91	3.74	–	3.94	9
49 10 12	0.72	0.54	0.40								8.03	7.87	4.92	–	5.91	14
49 10 25	1.07	0.94	0.79	0.63	0.58						10.00	10.43	5.98	13.58	7.87	17
49 10 35	1.71	1.53	1.30	1.10	1.06	1.03	1.01	0.58			10.00	10.43	5.98	13.58	7.87	18
49 10 45	2.32	2.00	1.89	1.71	1.57	1.55	1.46	1.01	0.74	0.54	10.00	10.63	5.98	13.78	7.87	20

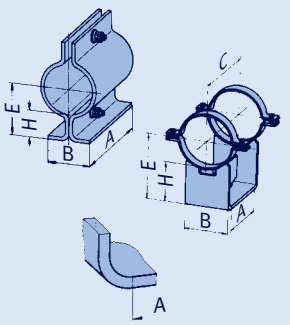

Selection table
OD 4.50" [114.3mm]

Temp. of medium >1110°F from page 4.52

Load doubling via type 77, see page 4.67

Pipe clamps, clamp bases, OD 4.50" [114.3mm] (ND 100/4"), type 42, 43, 45, 46, 48, 49

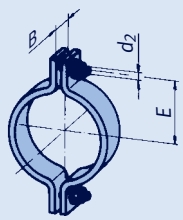

type	permissible load [lbs x 1000] 210	480	660	840	930	950	985	1040	1075	1110°F	d_2	E	B	weight [lbs]	load group
42 11 19	2.25	1.75	1.35								0.63	3.54	1.97	4.6	1-4
Heat-resistant materials, see pages 0.9 and 4.4															

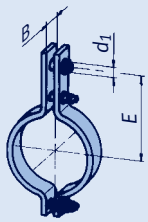

type	permissible load [lbs x 1000] 210	480	660	840	930	950	985	1040	1075	1110°F	d_1	E	B	weight [lbs]	load group
43 11 18	0.56	0.56	0.56								0.48	7.87	1.97	5.7	C-D
43 11 19	2.25	1.87	1.35								0.63	7.87	1.97	5.7	1-4
43 11 29			0.74	0.61	0.45						0.48	9.45	1.57	3.3	C-4
43 11 38				0.56	0.56	0.56	0.56	0.54			0.48	10.63	1.97	6.6	C-D
43 11 39			2.47	2.16	1.93	1.60	1.03	0.54			0.63	10.63	1.97	6.6	1-4
43 11 48							0.56	0.56	0.56	0.56	0.48	10.63	2.76	9.3	C-D
43 11 49	3.37	3.15	3.15	2.92	2.92	2.92	2.70	1.75	1.28	0.97	0.63	10.63	2.76	9.3	1-4

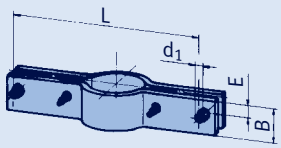

① type 46

type	permissible load [lbs x 1000] 210	480	660	840	930	950	985	1040	1075	1110°F	d_1	E	B	L	weight [lbs]	load group
45 11 19			1.12								0.48	0.98	3.15	13.78	19	C-D
45 11 11	3.82	2.92	2.18								0.63	1.18	3.15	13.78	19	1-4
45 11 19			1.12								0.48	0.98	3.15	19.69	26	C-D
45 11 11	2.70	2.09	1.51								0.63	1.18	3.15	19.69	26	1-4
45 11 19			1.12								0.48	0.98	3.15	25.59	32	C-D
45 11 11	2.11	1.57	1.12								0.63	1.18	3.15	25.59	32	1-4
45 11 19		1.12	0.90								0.48	0.98	3.15	31.50	38	C-D
45 11 11	1.69	1.26	0.90								0.63	1.18	3.15	31.50	38	1-4

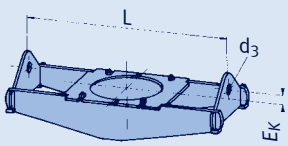

① type 48

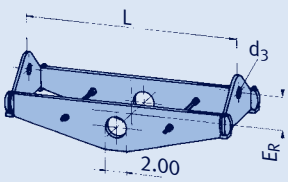

type	permissible load [lbs x 1000] 210	480	660	840	930	950	985	1040	1075	1110°F	d_3	L min	L max	E_K	type 46 [lbs min]	type 46 [lbs max]	E_R	type 48 [lbs min]	type 48 [lbs max]	load group
4.①11 12	4.3	3.1	2.2								0.98	13.78	31.50	0.20	18	41	2.76	14	37	3-5
4. 11 31	4.9	4.9	4.7	4.5	3.6	3.4	2.5	1.5			0.82	13.78	37.40	0.59	19	53	3.35	18	54	C-4
4. 11 32	8.3	8.1	7.9	7.4	5.2	4.7	3.6	2.2			0.98	13.78	37.40	0.98	25	71	3.35	24	76	3-5
4. 11 33	15.1	14.4	14.2	13.3	9.0	8.3	6.5	4.0			1.33	13.78	37.40	1.38	39	100	4.72	36	103	3-6
4. 11 41								2.2	1.8	1.3	0.82	13.78	37.40	0.59	22	64	3.94	22	65	C-4
4. 11 42								3.1	2.2	1.8	0.98	13.78	37.40	0.98	27	75	4.33	25	76	3-5
4. 11 43							6.1	5.8	4.5	3.4	1.33	13.78	37.40	1.38	40	115	5.12	34	110	3-6

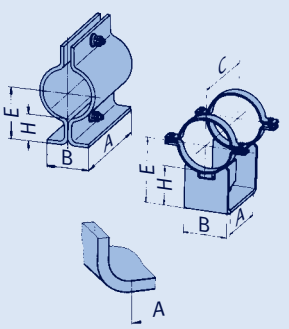

type	permissible load [lbs x 1000] 210	480	660	840	930	950	985	1040	1075	1110°F	E	A	B	C	H	weight [lbs]
49 11 11	0.52	0.40	0.29								6.18	5.91	3.74	–	3.94	9
49 11 12	0.72	0.54	0.40								8.15	7.87	4.92	–	5.91	14
49 11 25	1.10	0.94	0.79	0.65	0.61						10.12	10.43	5.98	13.58	7.87	17
49 11 35	1.71	1.53	1.33	1.12	1.06	1.06	1.01	0.61			10.12	10.43	5.98	13.58	7.87	18
49 11 45	2.32	2.00	1.89	1.71	1.57	1.55	1.46	1.01	0.74	0.54	10.12	10.43	5.98	13.78	7.87	21

Selection table OD 5.25" [133mm]

Temp. of medium >1110°F from page 4.52

Load doubling via type 77, see page 4.67

Pipe clamps, clamp bases, OD 5.25" [133mm] (ND 125/5"), type 42, 43, 45, 46, 48, 49

	permissible load [lbs x 1000]													weight	load
type	210	480	660	840	930	950	985	1040	1075	1110°F	d_2	E	B	[lbs]	group
42 13 19	2.25	1.75	1.24								0.63	3.94	1.97	4.8	1-4
Heat-resistant materials, see pages 0.9 and 4.4															

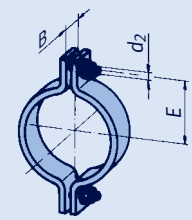

	permissible load [lbs x 1000]													weight	load
type	210	480	660	840	930	950	985	1040	1075	1110°F	d_1	E	B	[lbs]	group
43 13 18	0.56	0.56	0.56								0.48	8.66	1.97	6.2	C-D
43 13 19	2.25	1.87	1.35								0.63	8.66	1.97	6.2	1-4
43 13 28			0.56	0.56	0.56						0.48	10.63	1.97	5.1	C-D
43 13 29			1.15	0.97	0.70						0.63	10.63	1.97	5.1	1-4
43 13 38					0.56	0.56	0.56	0.56			0.48	11.42	2.36	8.6	C-D
43 13 39	3.60	2.92	2.70	2.25	1.98	1.64	1.08	0.56			0.63	11.42	2.36	8.6	1-4
43 13 48		3.15	3.15	2.92	2.92	2.92	2.25	1.55	1.15	0.85	0.48	11.42	2.76	12.3	C-D
43 13 49		3.15	3.15	2.92	2.92	2.92	2.25	1.55	1.15	0.85	0.63	11.42	2.76	12.3	1-4

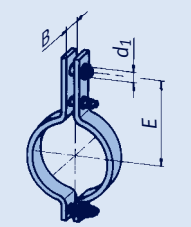

	permissible load [lbs x 1000]														weight	load
type	210	480	660	840	930	950	985	1040	1075	1110°F	d_1	E	B	L	[lbs]	group
45 13 19			1.12								0.48	0.98	3.54	15.75	24	C-D
45 13 11	4.05	3.15	2.25								0.63	1.18	3.54	15.75	24	1-4
45 13 19			1.12								0.48	0.98	3.54	21.65	31	C-D
45 13 11	2.92	2.18	1.55								0.63	1.18	3.54	21.65	31	1-4
45 13 19			1.12								0.48	0.98	3.54	27.56	39	C-D
45 13 11	2.23	1.66	1.19								0.63	1.18	3.54	27.56	39	1-4
45 13 19		1.12	0.94								0.48	0.98	3.54	33.46	45	C-D
45 13 11	1.80	1.33	0.94								0.63	1.18	3.54	33.46	45	1-4

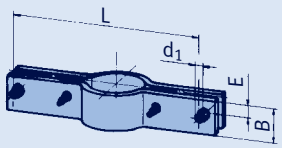

① type 46

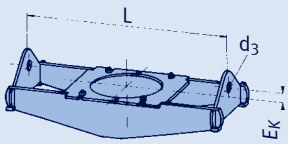

	permissible load [lbs x 1000]										L		type 46		type 48			load
type	210	480	660	840	930	950	985	1040	1075	1110°F	d_3	min	max	E_K	[lbs min]	[lbs max]	E_R	[lbs min]	[lbs max]	group
4.① 13 12	5.2	4.3	2.9								0.98	14.57	33.46	0.39	20	45	2.76	16	45	3-5
4. 13 31	5.4	5.2	5.2	4.9	4.5	3.8	2.9	1.6			0.82	15.75	39.37	0.59	24	65	3.74	23	65	C-4
4. 13 32	9.0	8.5	8.5	7.9	5.6	4.9	3.8	2.5			0.98	15.75	39.37	1.18	31	83	3.94	33	87	3-5
4. 13 33	16.2	15.7	15.1	13.9	10.1	9.0	7.0	4.0			1.33	15.75	39.37	1.57	46	117	5.12	44	138	4-6
4. 13 41								2.7	2.1	1.6	0.82	15.75	39.37	0.59	29	76	4.13	27	77	C-4
4. 13 42							5.6	4.0	2.9	2.2	0.98	15.75	39.37	1.18	38	96	4.53	32	95	3-5
4. 13 43						7.4	7.4	7.0	5.2	3.8	1.33	15.75	39.37	1.57	52	136	5.71	43	130	4-6

① type 48

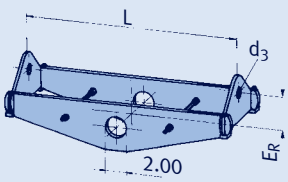

	permissible load [lbs x 1000]															weight
type	210	480	660	840	930	950	985	1040	1075	1110°F	E	A	B	C	H	[lbs]
49 13 11	0.56	0.45	0.31								6.57	5.91	4.13	–	3.94	12
49 13 12	0.85	0.67	0.45								8.54	7.87	5.12	–	5.91	18
49 13 25	1.82	1.57	1.30	1.08	0.99						10.51	10.63	6.30	13.78	7.87	21
49 13 35	2.72	2.45	2.09	1.80	1.69	1.66	1.57	0.83			10.51	10.63	6.30	13.78	7.87	22
49 13 45							1.46	1.01	0.74	0.54	10.51	10.83	6.30	13.78	7.87	21

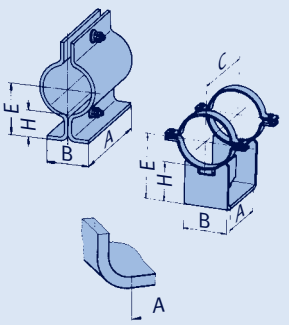

Selection table
OD 5.50" [139.7mm]

Temp. of medium >1110°F from page 4.52

Load doubling via type 77, see page 4.67

Pipe clamps, clamp bases, OD 5.50" [139.7mm] (ND 125/5"), type 42, 43, 45, 46, 48, 49

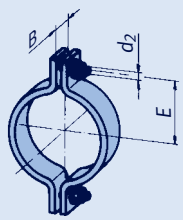

type	permissible load [lbs x 1000] 210	480	660	840	930	950	985	1040	1075	1110°F	d_2	E	B	weight [lbs]	load group
42 14 19	2.16	1.66	1.19								0.63	4.13	1.97	5.3	1-4
Heat-resistant materials, see pages 0.9 and 4.4															

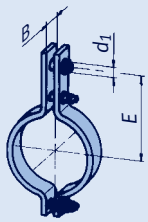

type	permissible load [lbs x 1000] 210	480	660	840	930	950	985	1040	1075	1110°F	d_1	E	B	weight [lbs]	load group
43 14 18	0.56	0.56	0.56								0.48	8.86	1.97	6.4	C-D
43 14 19	2.25	1.87	1.33								0.63	8.86	1.97	6.4	1-4
43 14 28			0.56	0.56	0.56						0.48	10.83	1.97	5.5	C-D
43 14 29			1.15	0.92	0.70						0.63	10.83	1.97	5.5	1-4
43 14 38					0.56	0.56	0.56	0.54			0.48	11.61	2.36	9.0	C-D
43 14 39	3.60	2.92	2.47	2.25	1.98	1.64	1.08	0.54			0.63	11.61	2.36	9.0	1-4
43 14 48		3.15	3.15	2.92	2.92	2.92	2.25	1.55	1.15	0.85	0.48	11.61	2.76	12.6	C-D
43 14 49		3.15	3.15	2.92	2.92	2.92	2.25	1.55	1.15	0.85	0.63	11.61	2.76	12.6	1-4

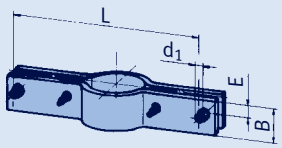

type	permissible load [lbs x 1000] 210	480	660	840	930	950	985	1040	1075	1110°F	d_1	E	B	L	weight [lbs]	load group
45 14 19			1.12								0.48	0.98	3.54	15.75	25	C-D
45 14 11	4.05	3.15	2.25								0.63	1.18	3.54	15.75	25	1-4
45 14 19			1.12								0.48	0.98	3.54	21.65	31	C-D
45 14 11	2.92	2.18	1.55								0.63	1.18	3.54	21.65	31	1-4
45 14 19			1.12								0.48	0.98	3.54	27.56	39	C-D
45 14 11	2.23	1.66	1.19								0.63	1.18	3.54	27.56	39	1-4
45 14 19		1.12	0.94								0.48	0.98	3.54	33.46	46	C-D
45 14 11	1.80	1.33	0.94								0.63	1.18	3.54	33.46	46	1-4

① type 46

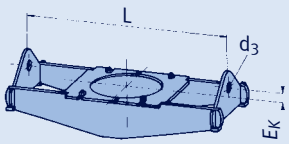

① type 48

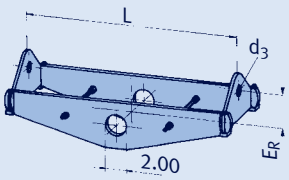

type	permissible load [lbs x 1000] 210	480	660	840	930	950	985	1040	1075	1110°F	d_3	L min	L max	E_K	type 46 [lbs min]	type 46 [lbs max]	E_R	type 48 [lbs min]	type 48 [lbs max]	load group
4.①1412	4.9	4.0	2.7								0.98	15.75	33.46	0.39	22	46	2.76	17	45	3-5
4. 14 31	5.4	5.2	5.2	4.9	4.5	3.8	2.9	1.6			0.82	15.75	39.37	0.59	25	64	3.74	23	65	C-4
4. 14 32	9.2	8.8	8.8	8.1	5.8	5.2	3.8	2.5			0.98	15.75	39.37	1.18	32	83	3.94	33	88	3-5
4. 14 33	15.7	15.3	15.1	13.9	10.1	9.0	6.7	4.0			1.33	15.75	39.37	1.57	47	117	5.12	44	138	4-6
4. 14 41								2.7	2.1	1.6	0.82	15.75	39.37	0.59	30	77	4.13	27	77	C-4
4. 14 42							5.6	4.0	2.9	2.2	0.98	15.75	39.37	1.18	39	97	4.53	32	95	3-5
4. 14 43						7.4	7.4	7.0	5.2	3.8	1.33	15.75	39.37	1.57	53	137	5.71	44	130	4-6

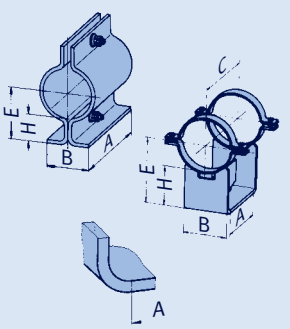

type	permissible load [lbs x 1000] 210	480	660	840	930	950	985	1040	1075	1110°F	E	A	B	C	H	weight [lbs]
49 14 11	0.56	0.45	0.31								6.69	5.91	4.13	–	3.94	12
49 14 12	0.85	0.67	0.45								8.66	7.87	5.12	–	5.91	19
49 14 25	1.84	1.57	1.33	1.08	1.01						10.63	10.63	6.30	13.78	7.87	21
49 14 35	2.77	2.47	2.09	1.80	1.71	1.69	1.60	0.85			10.63	10.63	6.30	13.78	7.87	22
49 14 45							1.46	1.01	0.76	0.56	10.63	10.83	6.30	13.78	7.87	22

Selection table OD 6.25" [159mm]

Temp. of medium >1110°F from page 4.52

Load doubling via type 77, see page 4.67

Pipe clamps, clamp bases, OD 6.25" [159mm] (ND 150/6"), type 42, 43, 46, 48, 49

	permissible load [lbs x 1000]														
type	210	480	660	840	930	950	985	1040	1075	1110°F	d_2	E	B	weight [lbs]	load group
42 16 19	1.93	1.48	1.06								0.63	4.53	1.97	5.5	1-4
Heat-resistant materials, see pages 0.9 and 4.4															

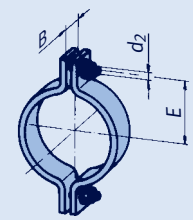

	permissible load [lbs x 1000]														
type	210	480	660	840	930	950	985	1040	1075	1110°F	d_1	E	B	weight [lbs]	load group
43 16 18	0.56	0.56	0.56								0.48	9.65	1.97	6.8	C-D
43 16 19	2.18	1.69	1.21								0.63	9.65	1.97	6.8	1-4
43 16 28			0.56	0.56	0.56						0.48	11.81	1.97	7.5	C-D
43 16 29	2.47	2.14	1.78	1.44	1.10						0.63	11.81	1.97	7.5	1-4
43 16 38					0.56	0.56	0.56	0.56			0.48	12.40	3.15	15.2	C-D
43 16 39	3.37	3.15	3.15	2.92	2.92	2.92	1.91	0.97			0.63	12.40	3.15	15.2	1-4
43 16 48								0.56	0.56	0.56	0.48	12.40	3.15	18.5	C-D
43 16 49						2.70	2.70	2.09	1.55	1.15	0.63	12.40	3.15	18.5	1-4

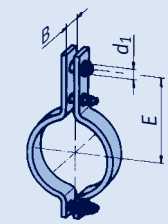

① type 46

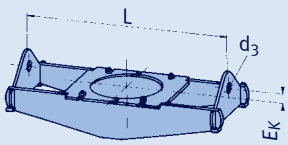

① type 48

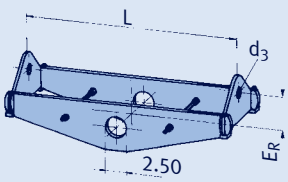

	permissible load [lbs x 1000]											L			type 46			type 48		load
type	210	480	660	840	930	950	985	1040	1075	1110°F	d_3	min	max	E_K	[lbs min]	[lbs max]	E_R	[lbs min]	[lbs max]	group
4.① 1611	4.0	3.4	2.5								0.82	15.75	35.43	0.59	23	47	3.54	17	44	C-4
4. 16 12	6.5	5.4	3.8								0.98	15.75	35.43	0.59	25	56	3.35	19	60	3-5
4. 16 31		5.4	5.2	4.9	4.3	3.8	2.9	1.6			0.82	17.72	41.34	0.98	29	71	3.94	24	67	C-4
4. 16 32	11.0	10.6	10.6	9.9	6.7	6.3	4.7	2.9			0.98	17.72	41.34	1.57	44	97	4.72	38	97	3-5
4. 16 33	18.9	18.0	17.8	16.0	11.9	10.6	8.1	4.7			1.33	17.72	41.34	1.97	60	143	5.91	61	150	4-6
4. 16 41								2.7	2.1	1.6	0.82	17.72	41.34	0.98	36	86	4.33	29	79	C-4
4. 16 42								4.3	3.1	2.2	0.98	17.72	41.34	1.57	47	115	5.12	37	102	3-5
4. 16 43						8.1	8.1	7.9	5.8	4.5	1.33	17.72	41.34	1.97	74	174	6.50	56	146	4-6

	permissible load [lbs x 1000]															
type	210	480	660	840	930	950	985	1040	1075	1110°F	E	A	B	C	H	weight [lbs]
49 16 11	0.56	0.45	0.31								7.09	7.87	4.53	–	3.94	15
49 16 14	0.99	0.85	0.81								9.06	9.45	5.51	13.39	5.91	20
49 16 25	2.09	1.82	1.51	1.24	1.12						11.02	12.40	6.73	15.55	7.87	24
49 16 35	3.82	3.37	2.92	2.47	2.25	2.25	2.23	1.24			11.02	12.60	6.73	15.75	7.87	28
49 16 45							2.14	1.46	1.10	0.81	11.02	12.60	6.73	15.75	7.87	27

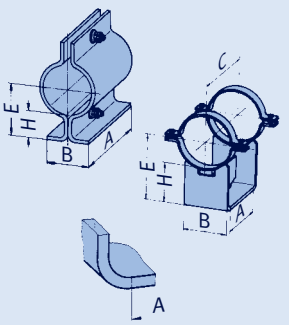

Selection table
OD 6.625" [168.3mm]

Temp. of medium >1110°F from page 4.52

Load doubling via type 77, see page 4.67

Pipe clamps, clamp bases, OD 6.625" [168.3mm] (ND 150/6"), type 42, 43, 46, 48, 49

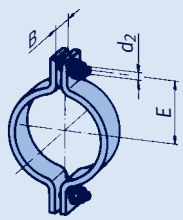

type	permissible load [lbs x 1000] 210	480	660	840	930	950	985	1040	1075	1110°F	d_2	E	B	weight [lbs]	load group
42 17 19	1.84	1.42	1.01								0.63	4.72	1.97	5.7	1-4
Heat-resistant materials, see pages 0.9 and 4.4															

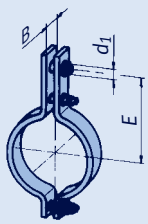

type	permissible load [lbs x 1000] 210	480	660	840	930	950	985	1040	1075	1110°F	d_1	E	B	weight [lbs]	load group
43 17 18	0.56	0.56	0.56								0.48	9.84	1.97	7.0	C-D
43 17 19	2.09	1.60	1.15								0.63	9.84	1.97	7.0	1-4
43 17 28			0.56	0.56	0.56						0.48	11.81	1.97	7.9	C-D
43 17 29	2.47	2.14	1.78	1.44	1.10						0.63	11.81	1.97	7.9	1-4
43 17 38					0.56	0.56	0.56	0.56			0.48	12.60	3.15	16.1	C-D
43 17 39	3.37	3.15	3.15	2.92	2.92	2.92	1.91	0.97			0.63	12.60	3.15	16.1	1-4
43 17 48								0.56	0.56	0.56	0.48	12.60	3.15	18.7	C-D
43 17 49						2.70	2.70	2.09	1.55	1.15	0.63	12.60	3.15	18.7	1-4

① type 46

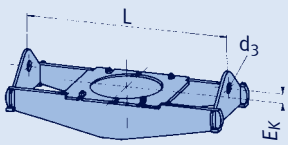

① type 48

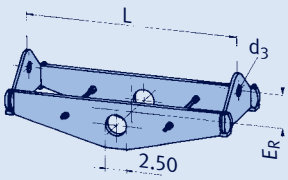

type	permissible load [lbs x 1000] 210	480	660	840	930	950	985	1040	1075	1110°F	d_3	L min	L max	E_K	type 46 [lbs min]	type 46 [lbs max]	E_R	type 48 [lbs min]	type 48 [lbs max]	load group
4.①17 11	4.0	3.4	2.5								0.82	16.14	35.43	0.59	24	46	3.54	18	44	C-4
4. 17 12	6.5	5.4	3.8								0.98	16.14	35.43	0.59	26	56	3.35	20	61	3-5
4. 17 31		5.4	5.2	4.9	4.3	3.8	2.9	1.6			0.82	17.72	41.34	0.98	29	71	3.94	24	68	C-4
4. 17 32	11.0	10.6	10.6	9.7	7.0	6.3	4.7	2.9			0.98	17.72	41.34	1.57	44	99	4.72	38	97	3-5
4. 17 33	18.9	18.0	17.8	16.2	11.9	10.6	8.1	4.7			1.33	17.72	41.34	1.97	62	143	5.91	62	151	4-6
4. 17 41								2.7	2.1	1.6	0.82	17.72	41.34	0.98	36	85	4.33	29	79	C-4
4. 17 42								4.3	3.1	2.2	0.98	17.72	41.34	1.57	49	116	5.12	37	102	3-5
4. 17 43						8.1	8.1	7.9	5.8	4.5	1.33	17.72	41.34	1.97	75	176	6.50	57	147	4-6

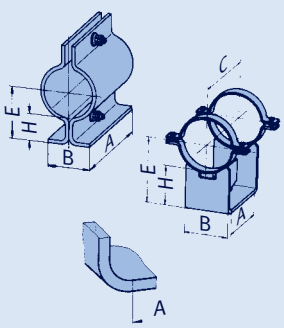

type	permissible load [lbs x 1000] 210	480	660	840	930	950	985	1040	1075	1110°F	E	A	B	C	H	weight [lbs]
49 17 11	0.56	0.45	0.31								7.24	7.87	4.72	–	3.94	15
49 17 14	1.06	0.92	0.88								9.21	9.45	5.98	13.39	5.91	21
49 17 25	2.13	1.84	1.53	1.26	1.17						11.18	12.40	6.73	15.55	7.87	24
49 17 35	3.82	3.37	2.92	2.47	2.25	2.25	2.25	1.26			11.18	12.60	6.73	15.75	7.87	28
49 17 45							2.16	1.48	1.10	0.81	11.18	12.60	6.73	15.75	7.87	28

Selection table
OD 7.625" [193.7mm]

Temp. of medium >1110°F
from page 4.52

Load doubling via type 77,
see page 4.67

Pipe clamps, clamp bases, OD 7.625" [193.7mm] (ND 175/7"), type 42, 43, 46, 48, 49

	permissible load [lbs x 1000]													weight	load
type	210	480	660	840	930	950	985	1040	1075	1110°F	d_2	E	B	[lbs]	group
42 19 19	1.6	1.24	0.88								0.63	5.31	1.97	6.4	1-4
Heat-resistant materials, see pages 0.9 and 4.4															

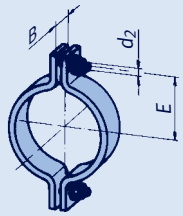

	permissible load [lbs x 1000]													weight	load
type	210	480	660	840	930	950	985	1040	1075	1110°F	d_1	E	B	[lbs]	group
43 19 18	0.56	0.56	0.56								0.48	10.63	1.97	10.4	C-D
43 19 19	2.70	2.25	1.62								0.63	10.63	1.97	10.4	1-5
43 19 28			0.56	0.56	0.56						0.48	13.19	1.97	9.3	C-D
43 19 29			1.53	1.24	0.94						0.63	13.19	1.97	9.3	1-5
43 19 38		2.25	2.25	2.16	2.11	2.09	2.07	1.69			0.63	13.98	2.76	23.8	1-3
43 19 39	5.17	4.72	4.50	4.27	4.27	4.27	3.15	1.69			0.79	13.98	2.76	23.8	3-6
43 19 48						2.54	2.54	2.54	2.47	1.93	0.63	13.98	3.94	33.9	1-3
43 19 49						4.27	4.27	3.37	2.47	1.93	0.79	13.98	3.94	33.9	3-6

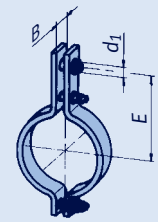

	permissible load [lbs x 1000]											L		type 46			type 48		load
type	210	480	660	840	930	950	985	1040	1075	1110°F	d_3	min	max	E_K	[lbs min]	[lbs max]	E_R	[lbs min]	[lbs max]	group
4.① 1911	5.4	4.3	3.1								0.82	17.72	37.40	0.59	28	59	3.15	22	55	C-4
4. 19 12	8.5	7.0	4.9								0.98	18.11	37.40	0.79	37	81	3.54	32	80	3-5
4. 19 21		5.6	5.6	5.2	3.6						0.82	18.11	39.37	0.59	29	65	3.94	24	62	C-4
4. 19 22	9.4	9.2	9.0	8.3	5.8						0.98	18.11	39.37	1.18	40	88	4.33	35	86	3-5
4. 19 31					3.4	3.4	2.5	1.3			0.82	21.65	45.28	0.98	35	74	4.33	33	72	C-4
4. 19 32					6.3	5.6	4.3	2.2			0.98	21.65	45.28	1.18	49	107	4.33	41	94	3-5
4. 19 33	10.3	9.7	9.4	9.0	8.8	7.9	5.8	2.9			0.98	21.65	45.28	1.57	63	131	5.12	52	130	3-5
4. 19 34	20.5	18.7	18.2	17.5	15.7	14.4	10.8	5.6			1.61	21.65	45.28	1.97	94	199	6.30	94	206	4-7
4. 19 41								2.2	1.8	1.3	0.82	21.65	45.28	0.98	44	93	4.53	38	85	C-4
4. 19 42								3.8	2.9	2.2	0.98	21.65	45.28	1.18	58	127	5.12	48	113	3-5
4. 19 43								5.4	4.0	2.9	0.98	21.65	45.28	1.57	71	154	5.51	57	136	3-5
4. 19 44						13.5	13.0	10.3	7.6	5.4	1.61	21.65	45.28	1.97	110	235	6.30	91	216	4-7

① type 46

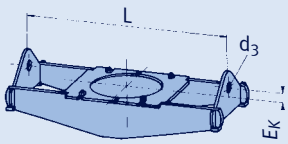

① type 48

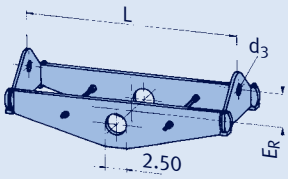

	permissible load [lbs x 1000]															weight
type	210	480	660	840	930	950	985	1040	1075	1110°F	E	A	B	C	H	[lbs]
49 19 13	1.03	0.94	0.90								7.76	9.45	5.12	13.58	3.94	19
49 19 14	1.64	1.39	1.33								9.72	9.45	5.98	13.98	5.91	26
49 19 25	2.70	2.47	2.09	1.71	1.57						11.69	12.60	7.13	15.75	7.87	29
49 19 35	5.40	4.72	4.05	3.60	3.37	3.15	3.15	2.02			13.66	12.40	7.99	16.34	9.84	41
49 19 45							2.92	2.11	1.60	1.17	13.66	12.40	7.99	16.34	9.84	41

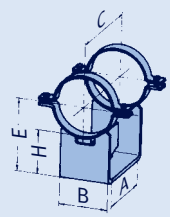

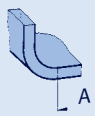

Selection table
OD 8.625" [219.1mm]

Temp. of medium >1110°F from page 4.52

Load doubling via type 77, see page 4.67

Pipe clamps, clamp bases, OD 8.625" [219.1mm] (ND 200/8"), type 42, 43, 44, 46, 48, 49

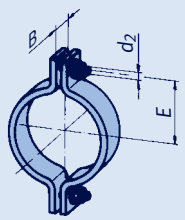

	permissible load [lbs x 1000]													weight	load
type	210	480	660	840	930	950	985	1040	1075	1110°F	d_2	E	B	[lbs]	group
42 22 19	1.51	1.17	0.83								0.63	5.71	1.97	6.8	1-4
Heat-resistant materials, see pages 0.9 and 4.4															

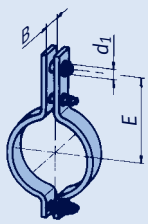

	permissible load [lbs x 1000]													weight	load
type	210	480	660	840	930	950	985	1040	1075	1110°F	d_1	E	B	[lbs]	group
43 22 18	0.56	0.56	0.56								0.48	11.61	1.97	11	C-D
43 22 19	2.47	2.02	1.44								0.63	11.61	1.97	11	1-5
43 22 28			0.56	0.56	0.56						0.48	14.37	1.97	12	C-D
43 22 29	2.70	2.47	2.11	1.73	1.24						0.63	14.37	1.97	12	1-5

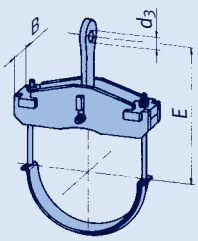

	permissible load [lbs x 1000]													weight	load
type	210	480	660	840	930	950	985	1040	1075	1110°F	d_3	E	B	[lbs]	group
44 22 12	6.7	5.6	4.5								1.33	10.83	3.35	20	3-6
44 22 31			2.7	2.2	2.1	2.1	2.0	1.4			0.82	14.76	3.70	20	C-4
44 22 32	7.6	6.7	6.3	5.8	5.4	5.2	4.5	2.5			1.33	14.76	3.78	29	4-6
44 22 33	15.1	13.3	11.9	10.1	9.2	9.0	8.8	4.5			1.81	14.76	4.80	48	5-8
44 22 41								2.0	1.6	1.1	0.82	14.76	4.06	22	C-4
44 22 42								4.3	3.1	2.5	1.33	14.76	4.33	33	4-6
44 22 43	17.8	15.5	14.8	13.3	12.6	12.4	11.2	7.4	5.4	4.0	1.81	14.76	5.20	53	5-8

① type 46

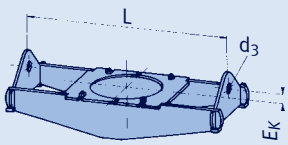

① type 48

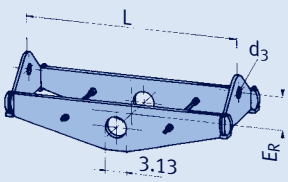

	permissible load [lbs x 1000]											L		type 46			type 48			load
type	210	480	660	840	930	950	985	1040	1075	1110°F	d_3	min	max	E_K	[lbs min]	[lbs max]	E_R	[lbs min]	[lbs max]	group
4.①2211	5.4	4.5	3.1								0.82	18.90	43.31	0.59	31	75	4.13	26	76	C-4
4. 22 12	9.7	7.4	5.4								0.98	18.90	43.31	0.98	44	109	4.33	36	99	3-5
4. 22 21		7.4	7.4	6.7	4.7						0.98	18.90	47.24	1.38	43	106	4.72	36	99	3-5
4. 22 22	11.2	10.8	10.8	9.9	6.7						1.33	18.90	47.24	1.57	51	140	5.91	52	137	4-6
4. 22 31					3.4	3.4	2.5	1.4			0.82	21.65	53.15	0.98	39	98	5.12	37	99	C-4
4. 22 32				8.1	7.9	7.2	5.4	2.9			0.98	21.65	53.15	1.57	65	160	5.91	56	150	3-5
4. 22 33	13.7	13.3	12.8	12.4	11.5	10.1	7.6	4.0			1.61	21.65	53.15	1.97	80	203	6.69	69	183	4-7
4. 22 34	25.4	24.3	23.6	22.7	19.8	17.8	13.5	7.0			1.81	21.65	53.15	2.36	125	291	7.87	125	309	5-8
4. 22 41								2.2	1.8	1.3	0.82	21.65	53.15	0.98	47	124	5.12	42	115	C-4
4. 22 42								5.2	3.8	2.7	0.98	21.65	53.15	1.57	76	189	6.10	60	171	3-5
4. 22 43							8.1	7.2	5.4	4.0	1.61	21.65	53.15	1.97	95	238	7.28	79	219	4-7
4. 22 44						13.7	13.5	12.4	9.4	7.0	1.81	21.65	53.15	2.36	142	349	7.87	106	301	5-8

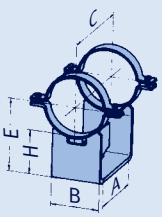

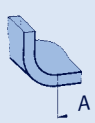

	permissible load [lbs x 1000]															weight
type	210	480	660	840	930	950	985	1040	1075	1110°F	E	A	B	C	H	[lbs]
49 22 13	1.60	1.46	1.39								8.27	9.25	5.12	13.78	3.94	22
49 22 14	2.25	2.07	1.93								10.24	9.84	6.14	14.37	5.91	30
49 22 25	2.70	2.70	2.25	2.00	1.84						14.17	12.80	8.27	16.14	9.84	36
49 22 35	6.07	5.85	4.95	4.27	4.05	3.82	3.82	2.16			14.17	12.40	8.27	16.34	9.84	44
49 22 45							3.37	2.25	1.82	1.35	14.17	12.40	8.27	16.34	9.84	44

Selection table
OD 9.625" [244.5mm]

Temp. of medium >1110°F
from page 4.52

Load doubling via type 77,
see page 4.67

Pipe clamps, clamp bases, OD 9.625" [244.5mm] (ND 225/9"), type 42, 43, 44, 46, 48, 49

	permissible load [lbs x 1000]														
type	210	480	660	840	930	950	985	1040	1075	1110°F	d_2	E	B	weight [lbs]	load group
42 24 19	1.37	1.06	0.74								0.63	6.30	1.97	7.3	1-4
Heat-resistant materials, see pages 0.9 and 4.4															

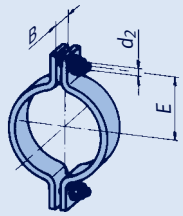

	permissible load [lbs x 1000]														
type	210	480	660	840	930	950	985	1040	1075	1110°F	d_1	E	B	weight [lbs]	load group
43 24 18	0.56	0.56	0.56								0.48	12.20	1.97	13	C-D
43 24 19	2.70	2.56	1.84								0.63	12.20	1.97	13	1-5
43 24 28			0.56	0.56	0.56						0.48	15.35	1.97	13	C-D
43 24 29		2.25	1.96	1.60	1.24						0.63	15.35	1.97	13	1-5

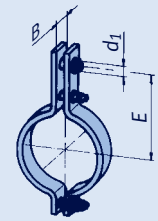

	permissible load [lbs x 1000]														
type	210	480	660	840	930	950	985	1040	1075	1110°F	d_3	E	B	weight [lbs]	load group
44 24 12	4.5	3.6	2.9								1.33	11.81	2.95	20	3-6
44 24 13	9.0	7.9	6.5								1.81	12.99	3.19	26	5-8
44 24 31			2.5	2.2	2.0	2.0	1.9	1.3			0.82	15.35	3.70	20	C-4
44 24 32			6.5	5.8	5.4	5.2	4.5	2.5			1.33	15.35	3.78	31	4-6
44 24 33	14.6	12.8	11.7	9.9	9.2	9.0	8.8	4.5			1.81	15.35	4.80	51	5-8
44 24 41								2.0	1.6	1.1	0.82	15.35	4.06	24	C-4
44 24 42								4.0	3.1	2.5	1.33	15.35	4.33	35	4-6
44 24 43	17.8	15.3	14.6	13.3	12.4	12.1	11.2	7.4	5.4	4.0	1.81	15.35	5.20	55	5-8

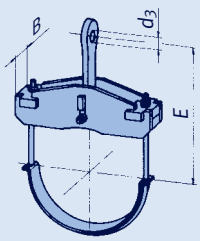

	permissible load [lbs x 1000]											L			type 46			type 48		load
type	210	480	660	840	930	950	985	1040	1075	1110°F	d_3	min	max	E_K	[lbs min]	[lbs max]	E_R	[lbs min]	[lbs max]	group
4.① 2411	6.7	5.6	4.0								0.98	19.29	43.31	0.98	40	96	3.94	29	83	3-5
4. 24 12	11.2	9.4	6.7								1.33	19.69	43.31	1.38	53	123	4.72	46	111	4-6
4. 24 21			8.5	7.9	5.6						0.98	19.69	47.24	1.57	49	118	5.12	42	111	3-5
4. 24 22	12.8	12.4	12.1	11.0	7.6						1.33	20.47	47.24	1.77	65	149	5.91	62	145	4-6
4. 24 31					4.0	3.6	2.9	1.6			0.98	21.65	53.15	1.18	44	110	4.33	38	103	3-5
4. 24 32				9.2	9.0	8.1	6.1	3.1			0.98	21.65	53.15	1.77	73	175	5.91	61	159	3-5
4. 24 33	14.8	14.4	13.9	13.3	12.6	11.2	8.5	4.5			1.61	21.65	53.15	1.97	90	218	6.30	73	215	4-7
4. 24 34	27.4	26.3	25.4	24.5	21.6	19.3	14.8	7.9			1.81	21.65	53.15	2.36	138	317	7.09	131	326	5-8
4. 24 41								2.7	2.1	1.6	0.98	21.65	53.15	1.18	57	137	4.72	46	123	3-5
4. 24 42								5.4	4.0	2.9	0.98	21.65	53.15	1.77	84	203	5.91	64	179	3-5
4. 24 43							8.3	8.1	6.1	4.5	1.61	21.65	53.15	1.97	106	257	6.30	77	222	4-7
4. 24 44							14.4	13.7	10.3	7.6	1.81	21.65	53.15	2.36	157	376	7.48	112	318	5-8

① type 46

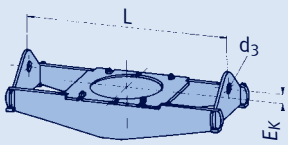

① type 48

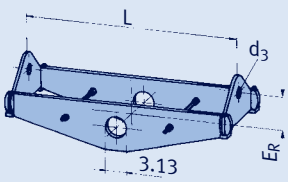

	permissible load [lbs x 1000]															
type	210	480	660	840	930	950	985	1040	1075	1110°F	E	A	B	C	H	weight [lbs]
49 24 13	1.60	1.48	1.39								8.74	9.25	5.12	13.78	3.94	23
49 24 14	2.47	2.25	2.14								10.71	9.84	6.73	14.37	5.91	33
49 24 25	4.72	4.05	3.37	2.70	2.47						14.65	12.40	8.74	16.34	9.84	45
49 24 35	7.64	7.19	6.74	5.85	5.40	5.40	4.72	2.70			14.65	12.60	8.74	16.54	9.84	54
49 24 45						5.40	4.95	3.37	2.47	1.96	14.65	12.60	8.74	16.54	9.84	54

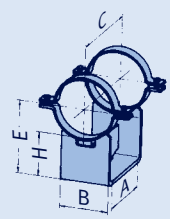

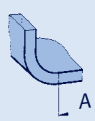

Selection table
OD 10.50" [267mm]

Temp. of medium >1110°F from page 4.52

Load doubling via type 77, see page 4.67

Pipe clamps, clamp bases, OD 10.50" [267mm] (ND 250/10"), type 42, 43, 44, 46, 48, 49

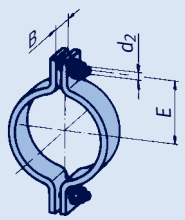

type	permissible load [lbs x 1000] 210	480	660	840	930	950	985	1040	1075	1110°F	d_2	E	B	weight [lbs]	load group
42 26 19	1.42	1.1	0.79								0.79	6.89	2.36	10	3-4
Heat-resistant materials, see pages 0.9 and 4.4															

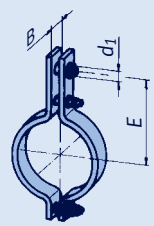

type	permissible load [lbs x 1000] 210	480	660	840	930	950	985	1040	1075	1110°F	d_1	E	B	weight [lbs]	load group
43 26 18	2.16	2.02	1.93								0.63	13.39	2.76	26	1-3
43 26 19	6.29	4.72	3.37								0.95	13.39	2.76	26	3-6
43 26 28			2.54	2.54	2.16						0.63	16.14	2.76	23	1-3
43 26 29		4.05	3.37	2.70	2.16						0.95	16.14	2.76	23	3-6

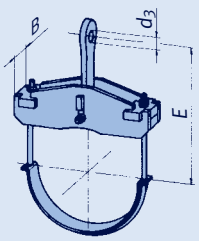

type	permissible load [lbs x 1000] 210	480	660	840	930	950	985	1040	1075	1110°F	d_3	E	B	weight [lbs]	load group
44 26 12	5.8	4.9	3.6								1.33	13.39	2.95	22	4-6
44 26 13	13.7	12.1	9.9								1.81	14.17	4.41	44	5-8
44 26 31			2.2	2.0	1.9	1.9	1.8	1.3			0.82	16.73	3.70	22	C-4
44 26 32			5.6	5.2	4.9	4.7	4.3	2.5			1.33	16.73	3.78	35	4-6
44 26 33			10.8	9.0	8.3	8.1	7.9	4.5			1.81	16.73	4.80	53	5-8
44 26 41								1.8	1.4	1.1	0.82	16.73	4.33	29	C-4
44 26 42								4.5	3.4	2.5	1.33	16.73	4.61	42	4-6
44 26 43	16.2	13.7	13.3	11.9	11.2	11.0	10.1	7.4	5.4	4.0	1.81	16.73	5.20	59	5-8

① type 46

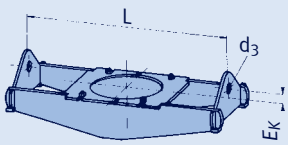

① type 48

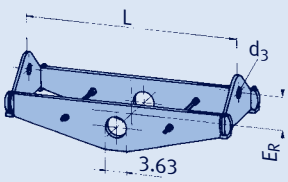

type	permissible load [lbs x 1000] 210	480	660	840	930	950	985	1040	1075	1110°F	d_3	L min	L max	type 46 E_K	type 46 [lbs min]	type 46 [lbs max]	type 48 E_R	type 48 [lbs min]	type 48 [lbs max]	load group
4.①2611	7.9	6.5	4.7								0.98	20.47	45.28	1.38	49	109	4.13	38	102	3-5
4. 26 12	12.1	9.7	7.0								1.33	21.65	45.28	1.77	67	143	5.12	54	131	4-6
4. 26 21			9.0	8.3	5.8						0.98	21.65	51.18	1.18	58	139	5.51	52	138	3-5
4. 26 22	13.0	12.6	12.4	11.5	8.1						1.33	22.05	51.18	1.97	77	171	5.91	67	160	4-6
4. 26 31					4.5	4.5	3.4	1.8			0.98	23.62	55.12	1.18	54	131	4.72	47	122	3-5
4. 26 32				9.4	9.0	8.3	6.3	3.4			0.98	23.62	55.12	1.97	83	190	5.91	68	174	3-5
4. 26 33	16.4	15.1	14.6	13.9	13.0	11.9	9.0	4.7			1.61	23.62	55.12	1.97	103	239	6.30	89	226	4-7
4. 26 34	30.1	27.4	26.8	25.9	22.5	20.2	15.5	8.1			1.81	23.62	55.12	2.76	159	351	7.28	137	333	5-8
4. 26 41								3.1	2.2	1.8	0.98	23.62	55.12	1.18	69	156	5.51	55	145	3-5
4. 26 42								6.1	4.5	3.4	0.98	23.62	55.12	1.97	97	224	6.89	76	203	3-5
4. 26 43							8.8	8.5	6.3	4.7	1.61	23.62	55.12	1.97	123	287	6.50	89	246	4-7
4. 26 44						15.7	15.7	14.6	11.0	8.1	1.81	23.62	55.12	2.76	190	425	8.07	129	349	5-8

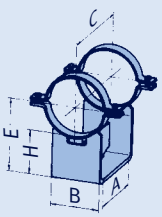

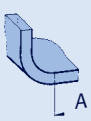

type	permissible load [lbs x 1000] 210	480	660	840	930	950	985	1040	1075	1110°F	E	A	B	C	H	weight [lbs]
49 26 13	1.96	1.78	1.69								9.21	9.45	6.30	14.37	3.94	30
49 26 14	3.82	3.37	3.15								11.18	10.04	6.73	15.55	5.91	43
49 26 25	5.62	4.72	4.05	3.15	2.92						15.12	13.39	9.02	17.72	9.84	54
49 26 35	9.22	7.87	7.64	6.97	6.52	5.62	4.95	3.15			15.12	13.58	9.02	18.11	9.84	65
49 26 45					6.07	6.07	5.62	3.82	2.92	2.20	15.12	13.58	9.02	18.11	9.84	62

Selection table
OD 10.75" [273mm]

Temp. of medium >1110°F
from page 4.52

Load doubling via type 77,
see page 4.67

Pipe clamps, clamp bases, OD 10.75" [273mm] (ND 250/10"), type 42, 43, 44, 46, 48, 49

	permissible load [lbs x 1000]														
type	210	480	660	840	930	950	985	1040	1075	1110°F	d_2	E	B	weight [lbs]	load group
42 27 19	1.39	1.06	0.76								0.79	7.09	2.36	10	3-4
Heat-resistant materials, see pages 0.9 and 4.4															

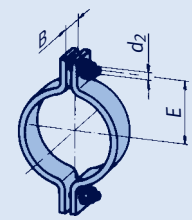

	permissible load [lbs x 1000]														
type	210	480	660	840	930	950	985	1040	1075	1110°F	d_1	E	B	weight [lbs]	load group
43 27 18	2.16	2.02	1.93								0.63	13.39	2.76	28	1-3
43 27 19	6.07	4.72	3.37								0.95	13.39	2.76	28	3-6
43 27 28			2.54	2.54	2.16						0.63	16.34	2.76	24	1-3
43 27 29		4.05	3.37	2.70	2.16						0.95	16.34	2.76	24	3-6

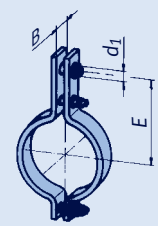

	permissible load [lbs x 1000]														
type	210	480	660	840	930	950	985	1040	1075	1110°F	d_3	E	B	weight [lbs]	load group
44 27 12	5.8	4.9	3.6								1.33	13.39	2.95	22	4-6
44 27 13	13.5	12.1	9.9								1.81	14.17	4.41	44	5-8
44 27 31			2.2	2.1	1.9	1.9	1.8	1.3			0.82	16.73	3.70	22	C-4
44 27 32			5.8	5.4	4.9	4.7	4.3	2.5			1.33	16.73	3.78	35	4-6
44 27 33			10.8	9.0	8.5	8.3	8.1	4.7			1.81	16.73	4.80	55	5-8
44 27 41								1.8	1.4	1.1	0.82	16.73	4.33	29	C-4
44 27 42								4.5	3.4	2.5	1.33	16.73	4.61	42	4-6
44 27 43	16.4	13.9	13.5	12.1	11.5	11.2	10.3	7.4	5.4	4.0	1.81	16.73	5.20	59	5-8

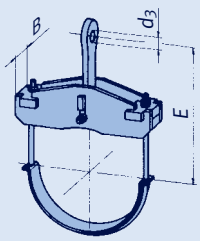

	permissible load [lbs x 1000]											L			type 46			type 48		load
type	210	480	660	840	930	950	985	1040	1075	1110°F	d_3	min	max	E_K	[lbs min]	[lbs max]	E_R	[lbs min]	[lbs max]	group
4.① 27 11	7.9	6.5	4.5								0.98	18.90	45.28	1.38	50	113	4.13	33	102	3-5
4. 27 12	11.9	9.7	7.0								1.33	20.47	45.28	1.77	68	144	5.12	52	132	4-6
4. 27 21			9.2	8.8	6.1						0.98	21.65	51.18	1.77	61	144	5.51	52	140	3-5
4. 27 22	12.8	12.4	12.1	11.2	8.1						1.33	22.44	51.18	1.97	80	172	5.91	68	160	4-6
4. 27 31					4.5	4.5	3.4	1.8			0.98	23.62	55.12	1.18	55	132	4.72	48	122	3-5
4. 27 32				9.4	9.2	8.3	6.3	3.4			0.98	23.62	55.12	1.97	86	189	5.91	69	175	3-5
4. 27 33	16.4	15.1	14.6	13.9	13.0	11.9	9.0	4.7			1.61	23.62	55.12	1.97	105	240	6.30	89	226	4-7
4. 27 34	30.1	27.4	26.8	25.9	22.5	20.0	15.5	8.1			1.81	23.62	55.12	2.76	161	353	7.28	138	334	5-8
4. 27 41								3.1	2.2	1.8	0.98	23.62	55.12	1.18	70	158	5.51	56	145	3-5
4. 27 42								6.1	4.5	3.1	0.98	23.62	55.12	1.97	104	236	6.89	76	204	3-5
4. 27 43							8.8	8.5	6.3	4.5	1.61	23.62	55.12	1.97	125	286	6.50	90	246	4-7
4. 27 44						15.7	15.7	14.6	11.0	7.9	1.81	23.62	55.12	2.76	193	428	8.07	129	350	5-8

① type 46

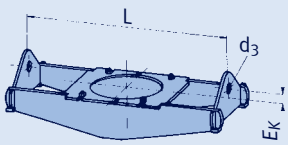

① type 48

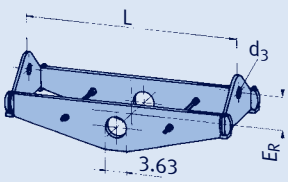

	permissible load [lbs x 1000]															
type	210	480	660	840	930	950	985	1040	1075	1110°F	E	A	B	C	H	weight [lbs]
49 27 13	1.96	1.78	1.69								9.33	9.45	6.30	14.17	3.94	31
49 27 14	3.82	3.37	3.15								11.30	10.04	6.73	15.55	5.91	43
49 27 25	5.62	4.95	4.05	3.15	2.92						15.24	13.39	9.02	17.72	9.84	54
49 27 35	8.77	7.87	7.64	6.97	6.52	5.62	4.95	3.15			15.24	13.58	9.02	18.11	9.84	65
49 27 45					6.29	6.29	5.62	3.82	2.92	2.25	15.24	13.58	9.02	18.11	9.84	63

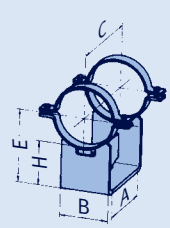

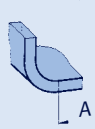

Selection table
OD 12.75" [323.9mm]

Temp. of medium >1110°F from page 4.52

Load doubling via type 77, see page 4.67

Pipe clamps, clamp bases, OD 12.75" [323.9mm] (ND 300/12"), type 42, 43, 44, 46, 48, 49

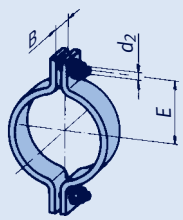

type	permissible load [lbs x 1000] 210	480	660	840	930	950	985	1040	1075	1110°F	d_2	E	B	weight [lbs]	load group
42 32 19	1.21	0.94	0.67								0.79	8.07	2.36	12	3-4
Heat-resistant materials, see pages 0.9 and 4.4															

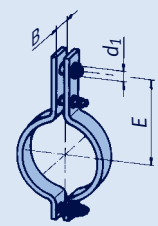

type	permissible load [lbs x 1000] 210	480	660	840	930	950	985	1040	1075	1110°F	d_1	E	B	weight [lbs]	load group
43 32 18	2.16	2.02	1.93								0.63	14.76	3.15	35	1-3
43 32 19	6.29	4.95	3.37								0.95	14.76	3.15	35	3-6
43 32 28			2.54	2.54	2.54						0.63	17.32	2.76	33	1-3
43 32 29	6.52	5.40	4.27	3.60	2.92						0.95	17.32	2.76	33	3-6

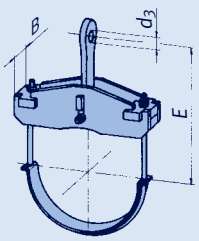

type	permissible load [lbs x 1000] 210	480	660	840	930	950	985	1040	1075	1110°F	d_3	E	B	weight [lbs]	load group
44 32 12	8.5	7.2	5.6								1.81	14.76	3.15	37	5-8
44 32 13	16.4	13.7	11.5								2.00	15.35	4.45	62	6-9
44 32 31			4.7	4.5	4.3	4.0	3.6	2.5			0.98	18.50	4.33	42	3-5
44 32 32			10.3	8.8	8.1	7.9	7.6	4.5			1.61	18.50	4.53	59	5-7
44 32 33	20.0	17.5	16.6	13.9	13.0	12.8	12.4	8.1			1.81	18.50	6.50	104	5-8
44 32 41								3.8	2.9	2.2	0.98	18.50	5.63	48	3-5
44 32 42								7.2	5.4	4.0	1.61	18.50	5.20	68	5-7
44 32 43	20.2	16.4	15.7	14.2	13.3	13.0	12.8	12.4	9.2	6.7	1.81	18.50	7.44	117	5-8

① type 46

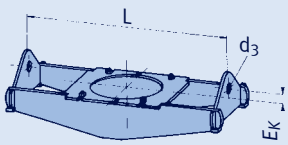

① type 48

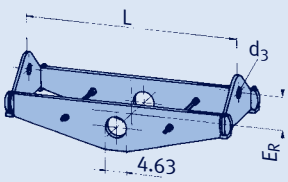

type	permissible load [lbs x 1000] 210	480	660	840	930	950	985	1040	1075	1110°F	d_3	L min	L max	type 46 E_K	type 46 [lbs min]	type 46 [lbs max]	type 48 E_R	type 48 [lbs min]	type 48 [lbs max]	load group
4.①3211	6.7	5.6	4.0								0.98	22.44	47.24	1.38	57	115	4.72	48	109	3-5
4. 32 12	12.1	9.7	7.0								1.33	22.44	47.24	1.57	83	165	5.51	64	149	4-6
4. 32 13	19.1	13.9	11.0								1.61	23.23	47.24	2.17	117	228	5.31	84	188	5-7
4. 32 21			6.3	6.1	4.5						0.98	24.41	51.18	1.18	57	126	4.72	56	120	3-5
4. 32 22		13.9	13.7	12.6	8.8						1.33	25.59	51.18	1.18	97	191	5.91	83	177	4-6
4. 32 23	19.8	19.1	18.9	17.3	12.4						1.81	27.56	51.18	1.18	118	233	6.30	110	220	5-8
4. 32 31					6.5	6.1	4.7	2.7			0.98	24.41	55.12	1.97	78	165	5.91	65	156	3-5
4. 32 32				15.3	14.2	12.6	9.7	4.9			1.61	25.59	55.12	1.97	132	269	7.09	109	246	4-7
4. 32 33	22.3	21.6	20.9	20.0	19.1	16.9	13.0	7.0			1.81	26.38	55.12	1.97	166	328	7.68	129	286	5-8
4. 32 34	28.1	27.9	27.4	25.9	24.7	22.0	16.9	9.0			1.81	26.38	55.12	1.97	190	386	8.07	156	341	5-8
4. 32 35	45.4	41.6	40.2	37.3	32.4	29.4	22.7	11.9			2.00	31.10	55.12	1.97	252	470	7.87	227	429	6-9
4. 32 41								4.7	3.6	2.5	0.98	27.56	55.12	1.97	106	211	6.50	84	193	3-5
4. 32 42								9.0	6.5	4.7	1.61	27.56	55.12	1.97	158	320	7.09	113	269	4-7
4. 32 43							13.9	12.1	9.0	6.7	1.81	27.56	55.12	1.97	197	394	8.27	143	331	5-8
4. 32 44							17.5	15.7	11.9	8.8	1.81	27.56	55.12	1.97	228	466	8.86	172	396	5-8
4. 32 45						22.9	22.7	20.9	15.7	11.5	2.00	31.50	55.12	1.97	286	557	9.25	217	462	6-9

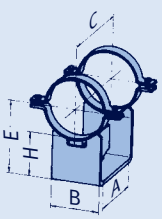

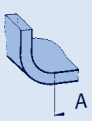

type	permissible load [lbs x 1000] 210	480	660	840	930	950	985	1040	1075	1110°F	E	A	B	C	H	weight [lbs]
49 32 13	2.9	2.7	2.5								10.31	9.84	7.09	14.76	3.94	38
49 32 14	4.5	3.8	3.6								14.25	10.04	9.02	15.55	7.87	59
49 32 25	6.7	5.8	4.9	4.0	3.6						16.22	13.39	9.76	17.72	9.84	61
49 32 35	10.3	9.0	8.5	7.6	7.2	6.3	5.6	3.6			16.22	13.58	10.00	18.11	9.84	72
49 32 45	10.7	9.7	9.2	8.3	7.6	7.6	7.2	4.9	3.6	2.7	16.22	13.58	10.00	18.11	9.84	71

Selection table OD 14" [355.6mm]

Temp. of medium >1110°F from page 4.52

Load doubling via type 77, see page 4.67

Pipe clamps, clamp bases, OD 14" [355.6mm] (ND 350/14"), type 42, 43, 44, 46, 48, 49

	permissible load [lbs x 1000]														
type	210	480	660	840	930	950	985	1040	1075	1110°F	d_2	E	B	weight [lbs]	load group
42 36 19	1.15	0.88	0.63								0.79	8.66	2.36	13	3-4
Heat-resistant materials, see pages 0.9 and 4.4															

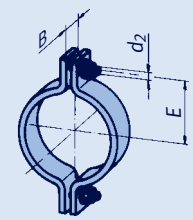

	permissible load [lbs x 1000]														
type	210	480	660	840	930	950	985	1040	1075	1110°F	d_1	E	B	weight [lbs]	load group
43 36 18	2.16	2.02	1.93								0.63	15.35	3.54	42	1-3
43 36 19	6.52	5.17	3.60								0.95	15.35	3.54	42	3-6
43 36 28			2.54	2.54	2.54						0.63	18.50	3.54	45	1-3
43 36 29	7.42	6.29	5.17	4.27	3.37						0.95	18.50	3.54	45	3-6

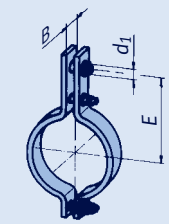

	permissible load [lbs x 1000]														
type	210	480	660	840	930	950	985	1040	1075	1110°F	d_3	E	B	weight [lbs]	load group
44 36 12	10.8	9.2	7.2								1.81	15.75	3.35	44	6-8
44 36 13	18.4	14.8	11.9								2.00	16.54	4.45	66	6-9
44 36 31			4.7	4.5	4.3	4.0	3.6	2.5			0.98	19.09	4.33	46	3-5
44 36 32			10.6	8.8	8.1	7.9	7.6	4.7			1.61	19.09	4.80	68	5-7
44 36 33	20.0	17.5	16.6	13.9	13.0	12.8	12.4	8.1			1.81	19.09	6.50	108	5-8
44 36 41								3.8	2.9	2.2	0.98	19.09	5.63	53	3-5
44 36 42								7.2	5.4	4.0	1.61	19.09	5.20	73	5-7
44 36 43	20.2	16.6	15.7	14.4	13.5	13.3	12.8	12.4	9.4	7.0	1.81	19.09	7.44	121	5-8

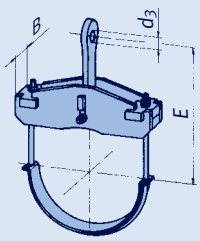

	permissible load [lbs x 1000]											L			type 46			type 48		load
type	210	480	660	840	930	950	985	1040	1075	1110°F	d_3	min	max	E_K	[lbs min]	[lbs max]	E_R	[lbs min]	[lbs max]	group
4.①3611	8.3	6.7	4.7								1.33	25.98	51.18	1.38	76	147	4.72	61	144	4-6
4. 36 12	14.4	11.2	9.0								1.33	25.98	51.18	1.57	115	215	5.12	81	181	4-6
4. 36 13	20.9	16.2	12.4								1.81	25.98	51.18	2.36	146	273	5.71	104	224	6-8
4. 36 21			5.6	5.4	3.8						0.98	25.98	55.12	1.18	62	124	4.53	69	126	3-5
4. 36 22			7.9	7.4	5.4						1.33	25.98	55.12	1.57	79	157	5.51	70	157	4-6
4. 36 23	18.0	17.3	17.1	16.0	11.0						1.61	30.31	55.12	1.57	131	246	6.10	111	231	5-7
4. 36 24	22.5	21.6	21.4	19.8	13.9						2.00	31.10	55.12	1.77	160	298	6.30	133	258	6-9
4. 36 31					5.6	5.4	4.0	2.2			0.98	27.56	59.06	1.57	84	170	5.31	71	163	3-5
4. 36 32					7.2	7.2	5.6	2.9			1.33	27.56	59.06	1.97	105	208	6.30	80	187	4-6
4. 36 33				16.6	15.1	13.5	10.3	5.4			1.61	27.95	59.06	2.36	164	317	7.09	127	280	4-7
4. 36 34	30.1	29.0	28.1	27.0	25.2	22.9	17.8	9.2			1.81	28.35	59.06	2.36	233	450	8.07	176	382	5-8
4. 36 35	43.8	41.8	40.5	39.1	37.5	33.5	25.9	13.7			2.00	31.10	59.06	2.76	303	578	9.06	252	518	6-9
4. 36 41								4.0	2.9	2.2	0.98	27.56	59.06	1.57	105	215	6.10	83	194	3-5
4. 36 42								5.6	4.3	3.1	1.33	27.56	59.06	1.97	128	260	6.69	98	234	4-6
4. 36 43								9.7	7.2	5.2	1.61	31.50	59.06	2.36	196	375	7.48	141	313	4-7
4. 36 44							16.4	16.2	12.1	9.0	1.81	31.50	59.06	2.36	278	535	9.45	208	449	5-8
4. 36 45						31.2	31.0	24.1	18.0	13.0	2.00	31.50	59.06	2.76	374	732	9.65	266	574	6-9

① type 46

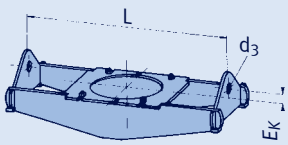

① type 48

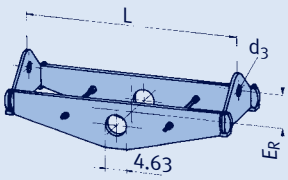

	permissible load [lbs x 1000]															
type	210	480	660	840	930	950	985	1040	1075	1110°F	E	A	B	C	H	weight [lbs]
49 36 13	4.9	4.7	4.3								10.94	11.81	9.06	17.52	3.94	55
49 36 14	5.8	4.9	4.7								14.88	11.81	9.25	17.91	7.87	75
49 36 25	7.0	6.7	6.7	5.4	4.9						16.85	15.75	10.24	20.08	9.84	75
49 36 35	13.9	13.3	11.7	10.1	9.4	9.4	8.8	5.2			18.82	15.75	11.02	20.67	11.81	101
49 36 45		12.6	12.1	10.8	10.1	9.9	9.2	6.3	4.7	3.4	18.82	15.75	11.02	20.67	11.81	101

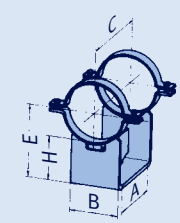

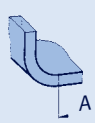

Selection table
OD 14.50" [368mm]

Temp. of medium >1110°F from page 4.52

Load doubling via type 77, see page 4.67

Pipe clamps, clamp bases, OD 14.50" [368mm] (ND 350/14"), type 42, 43, 44, 46, 48, 49

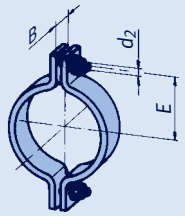

type	permissible load [lbs x 1000] 210	480	660	840	930	950	985	1040	1075	1110°F	d_2	E	B	weight [lbs]	load group
42 37 19	1.12	0.88	0.63								0.79	8.86	2.36	13	3-4
Heat-resistant materials, see pages 0.9 and 4.4															

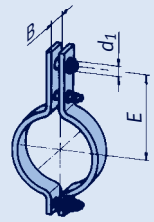

type	permissible load [lbs x 1000] 210	480	660	840	930	950	985	1040	1075	1110°F	d_1	E	B	weight [lbs]	load group
43 37 18	2.16	2.02	1.93								0.63	15.55	3.54	41	1-3
43 37 19	6.52	4.95	3.60								0.95	15.55	3.54	41	3-6
43 37 28			2.54	2.54	2.54						0.63	18.70	3.54	46	1-3
43 37 29	7.42	6.29	5.17	4.27	3.37						0.95	18.70	3.54	45	3-6

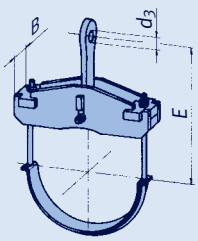

type	permissible load [lbs x 1000] 210	480	660	840	930	950	985	1040	1075	1110°F	d_3	E	B	weight [lbs]	load group
44 37 12	10.8	9.2	7.2								1.81	15.75	3.35	44	6-8
44 37 13	15.7	13.9	11.9								2.00	16.54	4.45	68	6-9
44 37 31			4.9	4.7	4.3	4.0	3.6	2.5			0.98	19.29	4.33	46	3-5
44 37 32			10.6	8.8	8.3	8.1	7.9	4.7			1.61	19.29	4.80	68	5-7
44 37 33	20.5	17.8	16.9	14.2	13.0	12.8	12.6	8.1			1.81	19.29	6.50	110	5-8
44 37 41								3.8	2.9	2.2	0.98	19.29	5.63	53	3-5
44 37 42								7.2	5.4	4.0	1.61	19.29	5.20	73	5-7
44 37 43			15.7	14.4	13.5	13.3	13.0	12.4	9.4	7.0	1.81	19.29	7.44	123	5-8

① type 46

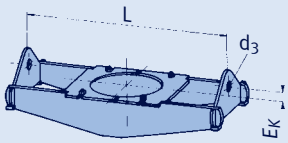

① type 48

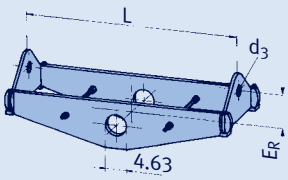

type	permissible load [lbs x 1000] 210	480	660	840	930	950	985	1040	1075	1110°F	d_3	L min	L max	E_K	type 46 [lbs min]	type 46 [lbs max]	E_R	type 48 [lbs min]	type 48 [lbs max]	load group
4.①37 11	8.3	6.7	4.7								1.33	26.77	51.18	1.38	79	148	4.72	63	145	4-6
4. 37 12	14.8	11.2	9.0								1.33	26.77	51.18	1.57	126	219	5.12	83	182	4-6
4. 37 13	20.9	16.4	12.4								1.81	26.77	51.18	2.36	151	277	5.71	107	225	6-8
4. 37 21			5.6	5.2	3.8						0.98	26.77	55.12	1.18	64	129	4.53	70	126	3-5
4. 37 22			7.9	7.4	5.4						1.33	26.77	55.12	1.57	81	160	5.51	72	158	4-6
4. 37 23	18.0	17.3	17.1	15.7	11.0						1.61	30.31	55.12	1.57	134	253	6.10	112	233	5-7
4. 37 24	22.5	21.6	21.4	19.8	13.9						1.81	31.10	55.12	1.77	162	302	6.30	134	259	6-8
4. 37 31					5.6	5.4	4.0	2.2			0.98	27.56	59.06	1.57	87	170	5.31	71	163	3-5
4. 37 32					7.2	7.2	5.4	2.9			1.33	27.56	59.06	1.97	108	209	6.30	81	187	4-6
4. 37 33				17.1	15.5	13.7	10.6	5.6			1.61	28.35	59.06	2.36	170	326	7.09	131	284	4-7
4. 37 34	30.8	29.0	28.1	27.2	25.2	22.9	17.8	9.2			1.81	29.13	59.06	2.36	241	456	8.66	183	386	5-8
4. 37 35	44.7	44.7	42.9	40.0	37.5	33.5	25.6	13.7			2.00	32.28	59.06	2.76	324	598	9.06	260	520	6-9
4. 37 41								4.0	2.9	2.2	0.98	29.53	59.06	1.57	110	218	6.10	88	195	3-5
4. 37 42								5.6	4.3	2.9	1.33	29.53	59.06	1.97	134	262	6.69	103	234	4-6
4. 37 43								9.7	7.2	5.2	1.61	29.53	59.06	2.36	195	380	7.48	135	314	4-7
4. 37 44							17.8	16.2	12.1	9.0	1.81	29.53	59.06	2.36	282	555	9.45	200	451	5-8
4. 37 45						31.2	31.0	23.8	18.0	13.0	2.00	33.46	59.06	2.76	391	741	9.65	280	576	6-9

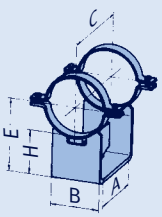

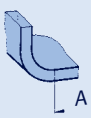

type	permissible load [lbs x 1000] 210	480	660	840	930	950	985	1040	1075	1110°F	E	A	B	C	H	weight [lbs]
49 37 13	4.9	4.7	4.3								11.18	11.81	9.06	17.52	3.94	55
49 37 14	6.1	5.2	4.9								15.12	11.81	9.49	18.11	7.87	75
49 37 25	7.2	7.0	6.7	5.4	5.2						17.09	15.75	10.24	20.08	9.84	77
49 37 35	14.2	13.7	12.1	10.3	9.7	9.4	9.0	5.4			19.06	15.75	11.50	20.67	11.81	106
49 37 45	14.6	13.3	12.6	11.2	10.6	10.3	9.7	6.7	4.9	3.6	19.06	15.75	11.50	20.67	11.81	104

Selection table OD 16" [406.4mm]

Temp. of medium >1110°F from page 4.52

Load doubling via type 77, see page 4.67

Pipe clamps, clamp bases, OD 16" [406.4mm] (ND 400/16"), type 42, 43, 44, 46, 48, 49

	permissible load [lbs x 1000]														
type	210	480	660	840	930	950	985	1040	1075	1110°F	d_2	E	B	weight [lbs]	load group
42 41 19	1.8	1.39	1.01								0.95	10.04	2.76	21	3-5
Heat-resistant materials, see pages 0.9 and 4.4															

	permissible load [lbs x 1000]														
type	210	480	660	840	930	950	985	1040	1075	1110°F	d_1	E	B	weight [lbs]	load group
43 41 18	2.16	2.02	1.93								0.63	16.93	3.94	51	1-3
43 41 19	6.74	5.17	3.60								0.95	16.93	3.94	51	3-6
43 41 28			2.54	2.54	2.54						0.63	19.69	3.94	54	1-3
43 41 29	7.42	6.29	5.17	4.50	3.37						0.95	19.69	3.94	54	3-6

	permissible load [lbs x 1000]														
type	210	480	660	840	930	950	985	1040	1075	1110°F	d_3	E	B	weight [lbs]	load group
44 41 12	13.3	11.0	9.0								2.00	17.32	3.62	57	6-9
44 41 13	20.9	16.9	14.2								2.40	17.72	5.31	77	7-10
44 41 22			8.1	6.3	5.8						1.61	19.69	4.61	55	5-7
44 41 23			13.7	10.8	9.9						2.00	19.69	5.31	84	6-9
44 41 31					4.0	3.8	3.4	2.5			0.98	20.47	4.33	51	3-5
44 41 35					8.5	8.3	8.1	5.4			1.81	20.47	5.67	97	5-8
44 41 36	22.7	20.9	18.2	15.1	14.2	13.9	13.5	7.4			2.00	20.47	5.87	139	6-9
44 41 41								3.6	2.7	2.2	0.98	20.47	5.63	57	3-5
44 41 45								9.4	7.0	5.2	1.81	20.47	6.46	128	5-8
44 41 46	33.9	31.2	29.7	26.3	24.5	24.3	22.0	14.4	10.8	7.6	2.00	20.47	7.44	203	6-9

	permissible load [lbs x 1000]											L			type 46			type 48		load
type	210	480	660	840	930	950	985	1040	1075	1110°F	d_3	min	max	E_K	[lbs min]	[lbs max]	E_R	[lbs min]	[lbs max]	group
4.① 4111	9.9	8.1	5.8								1.33	30.71	55.12	1.18	107	193	6.10	94	188	4-6
4. 41 12	16.9	12.4	9.7								1.61	30.71	55.12	1.57	151	265	6.30	122	239	5-7
4. 41 13	24.5	19.1	15.1								1.81	30.71	55.12	2.17	197	340	6.89	145	299	6-8
4. 41 21			6.5	6.3	4.5						0.98	30.71	59.06	1.57	92	164	5.71	83	170	3-5
4. 41 22			9.2	8.8	6.3						1.33	30.71	59.06	1.57	109	203	5.91	90	198	4-6
4. 41 23	21.4	20.5	20.2	18.9	13.0						1.61	32.28	59.06	1.97	185	326	7.09	144	292	5-7
4. 41 24	26.5	25.6	25.2	23.4	16.4						1.81	32.28	59.06	2.36	216	382	7.09	179	346	6-8
4. 41 31					6.7	6.3	4.7	2.7			0.98	31.50	62.99	1.77	113	219	6.30	94	212	3-5
4. 41 32					10.6	9.9	7.9	4.5			1.61	31.50	62.99	1.97	156	295	7.09	128	271	4-7
4. 41 33				18.7	17.5	16.0	12.4	6.5			1.81	31.50	62.99	2.76	214	396	7.87	159	353	5-8
4. 41 34	31.7	29.0	28.1	27.2	25.2	22.5	17.3	9.2			1.81	31.50	62.99	2.76	281	502	8.66	211	436	5-8
4. 41 35	53.1	52.2	50.6	47.2	43.4	39.1	30.1	16.0			2.00	34.25	62.99	3.15	420	744	10.24	330	646	6-9
4. 41 41								4.7	3.6	2.5	0.98	31.50	62.99	1.77	143	280	6.89	114	251	3-5
4. 41 42								8.1	6.1	4.5	1.61	31.50	62.99	1.97	198	375	8.07	146	327	4-7
4. 41 43								11.5	8.5	6.1	1.81	31.50	62.99	2.76	260	484	8.86	185	407	5-8
4. 41 44							17.3	16.2	12.1	9.0	1.81	31.50	62.99	2.76	336	624	8.86	216	495	5-8
4. 41 45						31.9	31.7	28.1	21.1	15.5	2.00	35.43	62.99	3.15	498	898	10.43	351	723	6-9

	permissible load [lbs x 1000]															
type	210	480	660	840	930	950	985	1040	1075	1110°F	E	A	B	C	H	weight [lbs]
49 41 13	5.6	5.2	4.9								11.93	11.02	10.24	17.72	3.94	73
49 41 14	10.6	9.0	8.3								15.87	11.81	9.49	18.90	7.87	97
49 41 25	13.3	11.9	9.7	7.9	7.2						17.83	15.75	10.75	21.06	9.84	104
49 41 35	20.2	18.9	16.2	13.7	12.8	12.8	12.4	7.6			19.80	15.75	11.81	21.65	11.81	139
49 41 45	20.5	18.7	17.8	16.0	14.8	14.4	13.5	9.2	6.7	5.2	19.80	15.75	11.81	21.65	11.81	139

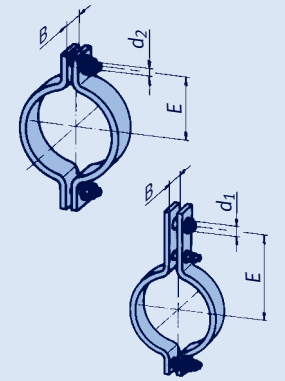

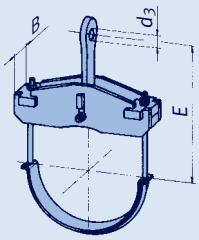

① type 46

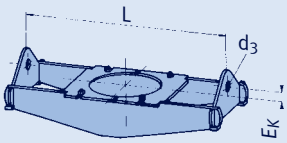

① type 48

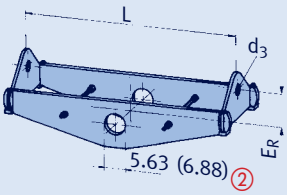

② For trunnion hole diameter 6.88 inch change last digit of type designation to a letter according to the following table. The weights may vary slightly.

change last digit from	to
48 41 .1	48 41 .A
48 41 .2	48 41 .B
48 41 .3	48 41 .C
48 41 .4	48 41 .D
48 41 .5	48 41 .E

e.g. 48 41 12 => 48 41 1B

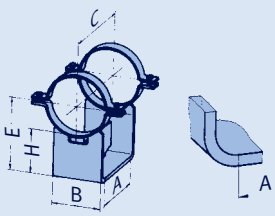

Selection table
OD 16.50" [419mm]

Temp. of medium >1110°F from page 4.52

Load doubling via type 77, see page 4.67

Pipe clamps, clamp bases, OD 16.50" [419mm] (ND 400/16"), type 42, 43, 44, 46, 48, 49

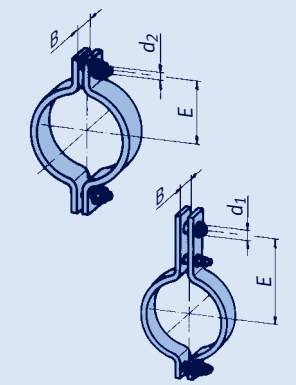

type	210	480	660	840	930	950	985	1040	1075	1110°F	d_2	E	B	weight [lbs]	load group
	permissible load [lbs x 1000]														
42 42 19	1.8	1.39	0.99								0.95	10.24	2.76	21	3-5
Heat-resistant materials, see pages 0.9 and 4.4															

type	210	480	660	840	930	950	985	1040	1075	1110°F	d_1	E	B	weight [lbs]	load group
	permissible load [lbs x 1000]														
43 42 18	2.16	2.02	1.93								0.63	17.13	3.94	51	1-3
43 42 19	6.52	4.95	3.60								0.95	17.13	3.94	51	3-6
43 42 28			2.54	2.54	2.54						0.63	19.69	3.94	54	1-3
43 42 29	7.42	6.29	5.17	4.27	3.37						0.95	19.69	3.94	55	3-6

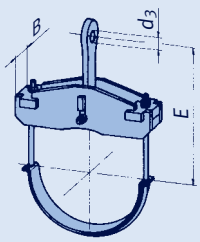

type	210	480	660	840	930	950	985	1040	1075	1110°F	d_3	E	B	weight [lbs]	load group
	permissible load [lbs x 1000]														
44 42 12	13.3	11.0	9.0								2.00	17.52	3.62	57	6-9
44 42 15	33.9	26.1	18.9								2.40	18.11	6.38	132	7-10
44 42 22			8.1	6.3	5.8						1.61	19.69	4.61	57	5-7
44 42 25			16.9	13.3	11.9						2.00	19.69	5.51	97	6-9
44 42 31					4.0	3.8	3.4	2.5			0.98	20.67	4.33	51	3-5
44 42 35					8.5	8.3	8.1	5.6			1.81	20.67	5.67	97	5-8
44 42 36		22.0	19.1	16.0	15.1	14.6	14.4	7.6			2.00	20.67	5.87	141	6-9
44 42 41								3.6	2.7	2.2	0.98	20.67	5.63	59	3-5
44 42 45								9.4	7.0	5.2	1.81	20.67	6.46	128	5-8
44 42 46	33.9	31.5	29.9	26.5	24.7	24.3	22.3	14.4	10.8	7.6	2.00	20.67	7.44	211	6-9

① type 46

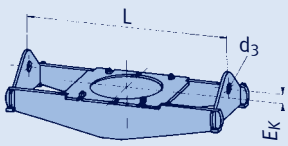

① type 48

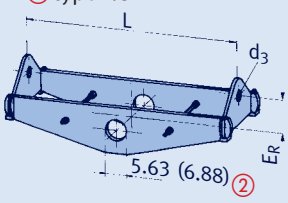

type	210	480	660	840	930	950	985	1040	1075	1110°F	d_3	L min	L max	E_K	type 46 [lbs min]	type 46 [lbs max]	E_R	type 48 [lbs min]	type 48 [lbs max]	load group
	permissible load [lbs x 1000]																			
4.①4211	9.7	7.9	5.6								1.33	31.50	55.12	1.18	110	195	6.10	97	189	4-6
4. 42 12	16.6	12.4	9.7								1.61	31.50	55.12	1.57	150	263	6.30	125	241	5-7
4. 42 13	24.5	19.1	15.1								1.81	31.50	55.12	2.17	203	347	6.89	148	301	6-8
4. 42 21			6.5	6.3	4.5						0.98	31.50	59.06	1.57	96	164	5.71	85	171	3-5
4. 42 22			9.2	8.8	6.3						1.33	31.50	59.06	1.57	112	199	5.91	92	199	4-6
4. 42 23	21.4	20.5	20.2	18.7	13.0						1.61	32.68	59.06	1.97	189	327	7.09	146	294	5-7
4. 42 24	26.3	25.6	25.4	23.4	16.4						1.81	32.68	59.06	2.36	223	388	7.09	182	348	6-8
4. 42 31					6.7	6.3	4.7	2.7			0.98	31.50	62.99	1.77	115	222	6.30	95	213	3-5
4. 42 32					10.6	10.1	7.9	4.5			1.61	31.50	62.99	1.97	160	299	7.09	129	272	4-7
4. 42 33				18.7	17.5	15.7	12.1	6.5			1.81	31.50	62.99	2.76	217	401	7.87	160	354	5-8
4. 42 34	31.2	29.0	28.1	27.2	25.4	22.5	17.3	9.2			1.81	31.89	62.99	2.76	289	509	8.66	216	441	5-8
4. 42 35	52.6	51.7	50.1	47.0	43.6	39.6	30.6	16.0			2.00	35.04	62.99	3.15	431	749	10.24	338	649	6-9
4. 42 41								4.7	3.6	2.5	0.98	31.50	62.99	1.77	147	284	6.89	115	252	3-5
4. 42 42								8.1	6.1	4.5	1.61	31.50	62.99	1.97	202	380	8.07	147	328	4-7
4. 42 43								11.2	8.5	6.3	1.81	31.50	62.99	2.76	266	490	8.86	187	408	5-8
4. 42 44							17.3	16.2	12.1	9.0	1.81	35.43	62.99	2.76	359	634	8.86	238	496	5-8
4. 42 45						31.5	31.2	28.1	21.1	15.5	2.00	35.43	62.99	3.15	502	908	10.43	353	726	6-9

② For trunnion hole diameter 6.88 inch change last digit of type designation to a letter according to the following table. The weights may vary slightly.

change last digit from	to
48 42 .1	48 42 .A
48 42 .2	48 42 .B
48 42 .3	48 42 .C
48 42 .4	48 42 .D
48 42 .5	48 42 .E

e.g. 48 42 34 => 48 42 3D

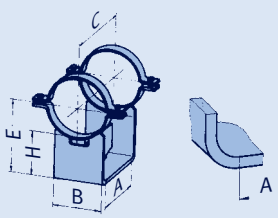

type	210	480	660	840	930	950	985	1040	1075	1110°F	E	A	B	C	H	weight [lbs]
	permissible load [lbs x 1000]															
49 42 13	8.3	7.2	5.4								12.20	11.81	9.49	16.54	3.94	68
49 42 14	10.6	9.0	8.3								16.14	11.81	9.49	18.90	7.87	97
49 42 25	13.7	11.9	9.7	7.9	7.2						18.11	15.75	10.75	21.06	9.84	106
49 42 35	20.5	19.1	16.2	13.7	12.8	12.8	12.4	7.6			20.08	15.75	11.81	21.85	11.81	141
49 42 45	20.7	19.1	18.0	16.2	15.1	14.6	13.7	9.4	7.2	5.2	20.08	15.75	11.81	21.85	11.81	141

Selection table OD 18" [457.2mm]

Temp. of medium >1110°F from page 4.52

Load doubling via type 77, see page 4.67

Pipe clamps, clamp bases, OD 18" [457.2mm] (ND 450/18"), type 42, 43, 44, 46, 48, 49

	permissible load [lbs x 1000]													weight	load
type	210	480	660	840	930	950	985	1040	1075	1110°F	d_2	E	B	[lbs]	group
42 46 19	1.69	1.3	0.92								0.95	11.02	2.76	23	3-5
Heat-resistant materials, see pages 0.9 and 4.4															

	permissible load [lbs x 1000]													weight	load
type	210	480	660	840	930	950	985	1040	1075	1110°F	d_1	E	B	[lbs]	group
43 46 18	2.16	2.02	1.93								0.63	17.72	3.94	53	1-3
43 46 19	6.07	4.72	3.37								0.95	17.72	3.94	53	3-6

	permissible load [lbs x 1000]													weight	load
type	210	480	660	840	930	950	985	1040	1075	1110°F	d_3	E	B	[lbs]	group
44 46 12	13.3	11.2	8.8								2.00	18.50	4.41	66	6-9
44 46 13	18.2	14.8	11.5								2.00	18.50	4.45	79	7-9
44 46 15	33.7	26.3	18.9								2.40	18.90	6.38	137	7-10
44 46 22			6.3	4.9	4.5						1.61	21.26	3.78	53	5-7
44 46 23			13.0	10.1	9.4						2.00	21.26	4.80	79	6-9
44 46 25			15.5	12.4	11.2						2.00	21.26	5.35	101	6-9
44 46 31					3.1	2.9	2.5	2.2			0.98	22.05	4.02	55	3-5
44 46 32					7.2	7.0	6.7	4.5			1.81	22.05	5.31	88	5-8
44 46 35		19.6	17.1	14.2	13.3	13.0	12.8	7.4			2.00	22.05	5.87	145	6-9
44 46 36	33.9	32.6	28.1	23.4	22.0	21.8	21.1	11.7			2.00	22.05	8.23	251	6-9
44 46 41								3.4	2.7	2.0	0.98	22.05	5.63	64	3-5
44 46 42								7.2	5.4	3.8	1.81	22.05	5.71	97	5-8
44 46 45		29.9	28.3	25.2	23.4	23.2	22.0	14.4	10.6	7.6	2.00	22.05	7.44	211	6-9
44 46 46	33.9	33.3	31.5	28.6	27.0	26.3	25.6	20.5	14.8	10.6	2.00	22.05	9.02	319	6-9

	permissible load [lbs x 1000]											L			type 46			type 48		load
type	210	480	660	840	930	950	985	1040	1075	1110°F	d_3	min	max	E_K	[lbs min]	[lbs max]	E_R	[lbs min]	[lbs max]	group
4.① 4611	10.1	8.1	5.8								1.33	30.31	57.09	1.38	122	215	5.91	100	208	4-6
4. 46 12	13.5	10.3	7.9								1.61	32.28	57.09	1.57	145	250	6.10	122	236	5-7
4. 46 13	27.0	20.7	16.4								1.81	33.46	57.09	1.97	237	390	6.69	175	336	6-8
4. 46 14	33.9	25.2	20.0								2.00	33.46	57.09	2.36	283	462	7.28	218	390	6-9
4. 46 21			8.1	7.6	5.4						1.33	31.50	62.99	1.77	116	211	6.30	104	221	4-6
4. 46 22			13.3	12.4	9.0						1.61	31.50	62.99	1.97	160	283	6.69	128	274	5-7
4. 46 23	31.2	29.9	29.7	26.8	19.1						1.81	36.61	62.99	2.17	278	470	7.28	227	406	6-8
4. 46 24	35.1	34.2	33.7	31.0	22.0						2.00	36.61	62.99	2.17	310	505	7.87	265	464	7-9
4. 46 31					11.2	10.3	7.9	4.5			1.61	35.43	66.93	1.97	190	335	7.09	156	307	4-7
4. 46 32					13.0	11.9	9.4	4.9			1.81	35.43	66.93	1.97	206	366	7.48	168	332	5-8
4. 46 33				27.7	25.2	22.7	17.5	9.2			1.81	35.43	66.93	2.36	329	574	8.86	252	493	5-8
4. 46 34	61.8	56.7	54.9	53.1	51.0	45.6	35.1	18.7			2.00	36.61	66.93	2.76	527	937	9.65	402	770	6-9
4. 46 35	67.0	64.1	62.0	60.0	57.8	52.4	40.7	21.1			2.40	38.58	66.93	3.35	635	1027	9.84	444	822	7-10
4. 46 41								8.1	6.1	4.5	1.61	35.43	66.93	1.97	235	423	7.68	177	366	4-7
4. 46 42								9.2	7.0	4.9	1.81	35.43	66.93	1.97	254	466	8.27	190	410	5-8
4. 46 43								16.2	12.1	9.0	1.81	35.43	66.93	2.36	393	696	9.25	262	554	5-8
4. 46 44							35.3	32.6	24.5	18.0	2.00	39.37	66.93	2.76	632	1097	11.61	452	864	6-9
4. 46 45						45.2	44.7	36.6	27.7	20.2	2.40	39.37	66.93	3.35	697	1196	11.61	485	956	7-10

	permissible load [lbs x 1000]															weight
type	210	480	660	840	930	950	985	1040	1075	1110°F	E	A	B	C	H	[lbs]
49 46 13	8.3	7.2	5.4								12.95	13.78	9.49	19.09	3.94	79
49 46 14	16.9	12.8	9.2								16.89	13.78	10.24	19.69	7.87	108
49 46 25		12.4	9.9	8.1	7.4						18.86	15.75	11.50	21.06	9.84	112
49 46 35	22.5	21.1	18.0	15.3	14.4	14.4	13.9	8.8			20.83	15.75	12.76	21.85	11.81	150
49 46 45	23.6	21.4	20.2	18.2	16.9	16.6	15.7	10.8	8.1	5.8	20.83	15.75	12.76	21.85	11.81	152

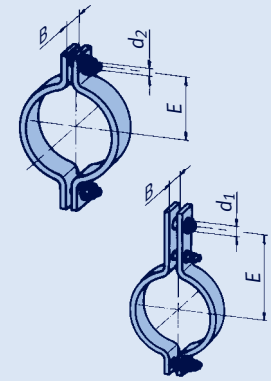

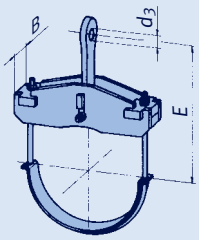

① type 46

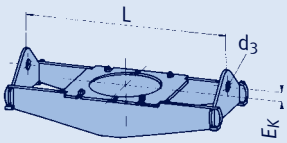

① type 48

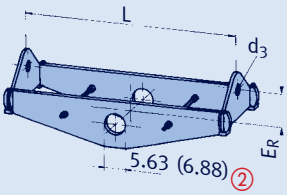

② For trunnion hole diameter 6.88 inch change last digit of type designation to a letter according to the following table. The weights may vary slightly.

change last digit from	to
48 46 .1	48 46 .A
48 46 .2	48 46 .B
48 46 .3	48 46 .C
48 46 .4	48 46 .D
48 46 .5	48 46 .E

e.g. 48 46 44 => 48 46 4D

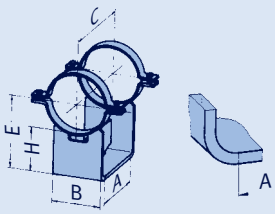

Selection table OD 20" [508mm]

Temp. of medium >1110°F from page 4.52

Load doubling via type 77, see page 4.67

Pipe clamps, clamp bases, OD 20" [508mm] (ND 500/20"), type 42, 44, 46, 48, 49

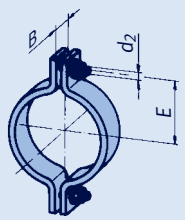

type	permissible load [lbs x 1000] 210	480	660	840	930	950	985	1040	1075	1110°F	d_2	E	B	weight [lbs]	load group
42 51 19	1.55	1.21	0.85								0.95	12.01	2.76	25	3-5
Heat-resistant materials, see pages 0.9 and 4.4															

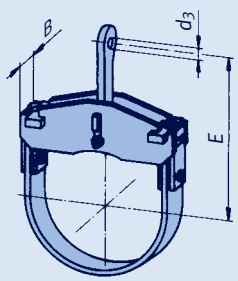

type	permissible load [lbs x 1000] 210	480	660	840	930	950	985	1040	1075	1110°F	d_3	E	B	weight [lbs]	load group
44 51 14	2.2	2.0	1.7								0.82	19.69	3.15	55	1-4
44 51 15	6.3	5.4	4.3								1.33	19.69	3.15	59	4-6
44 51 16	12.8	10.8	8.3								2.00	19.69	3.62	77	6-9
44 51 17	22.0	18.2	14.6								2.40	19.69	6.38	128	7-10
44 51 18	42.5	35.5	28.1								2.79	20.47	8.74	233	8-30
44 51 25			3.6	2.9	2.7						0.98	22.44	3.90	62	3-5
44 51 26			6.7	5.2	4.9						1.61	22.44	3.94	68	5-7
44 51 27			13.3	10.6	9.4						2.00	22.44	4.80	93	6-9
44 51 28			26.3	22.5	20.2						2.40	22.44	6.46	165	7-10
44 51 35					3.8	3.6	3.1	2.5			0.98	23.23	5.04	81	3-5
44 51 36					7.9	7.6	7.4	5.2			1.81	23.23	5.67	106	5-8
44 51 37					18.2	18.0	15.3	7.9			2.00	23.23	7.44	181	6-9
44 51 38		34.8	33.0	31.5	29.4	27.4	22.0	11.7			2.40	23.23	7.72	260	7-10
44 51 45								4.3	3.4	2.5	0.98	23.23	6.46	93	3-5
44 51 46								9.0	6.7	4.9	1.81	23.23	6.46	139	5-8
44 51 47								14.6	10.8	7.9	2.00	23.23	7.72	238	6-9
44 51 48	49.9	49.9	48.8	45.4	42.5	41.8	36.9	25.4	18.9	14.2	2.40	23.23	10.00	419	7-10

① type 46

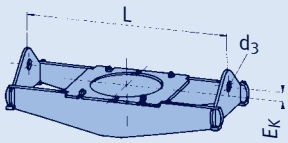

① type 48

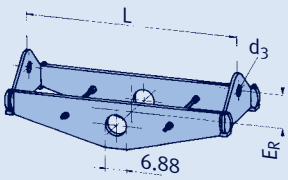

type	permissible load [lbs x 1000] 210	480	660	840	930	950	985	1040	1075	1110°F	d_3	L min	L max	type 46 E_K	type 46 [lbs min]	type 46 [lbs max]	type 48 E_R	type 48 [lbs min]	type 48 [lbs max]	load group
4.①51 11	9.9	8.3	5.8								1.33	33.86	59.06	1.38	142	237	6.30	133	247	4-6
4. 51 12	15.3	11.5	8.8								1.61	33.86	59.06	1.57	186	307	6.89	146	280	5-7
4. 51 13	26.8	20.9	16.4								1.81	35.43	59.06	2.36	274	426	6.89	212	377	6-8
4. 51 14	38.4	28.6	22.7								2.00	35.43	59.06	2.56	394	565	7.09	255	455	6-9
4. 51 21			9.4	9.0	6.5						1.33	36.22	64.96	1.97	147	254	6.69	141	255	4-6
4. 51 22			13.5	12.4	9.0						1.61	36.22	64.96	2.36	188	310	7.09	155	303	5-7
4. 51 23	30.6	29.2	29.0	26.3	18.7						1.81	39.37	64.96	2.36	312	502	7.87	246	449	6-8
4. 51 24	37.8	36.4	36.0	33.0	23.2						2.40	41.34	64.96	2.36	379	576	8.66	313	524	7-10
4. 51 31					10.1	10.1	7.9	4.5			1.61	39.37	70.87	2.36	224	371	7.87	175	350	4-7
4. 51 32					13.3	12.1	9.4	5.2			1.81	39.37	70.87	2.76	256	424	7.87	202	384	5-8
4. 51 33				27.7	25.4	22.9	17.8	9.2			1.81	39.37	70.87	3.15	388	645	9.06	298	559	5-8
4. 51 34	60.2	56.2	54.4	52.6	51.0	46.1	35.5	18.9			2.00	40.55	70.87	3.15	614	1041	10.43	462	859	6-9
4. 51 35	75.3	69.2	67.0	64.7	63.4	57.1	43.8	23.4			2.40	40.55	70.87	3.54	770	1233	11.81	529	962	7-10
4. 51 41								8.1	6.1	4.5	1.61	39.37	70.87	2.36	277	475	8.27	213	419	4-7
4. 51 42								9.2	7.0	4.9	1.81	39.37	70.87	2.76	317	539	8.86	227	450	5-8
4. 51 43								16.2	12.1	9.0	1.81	39.37	70.87	3.15	462	777	9.84	313	626	5-8
4. 51 44							35.1	32.6	24.5	18.0	2.00	41.34	70.87	3.15	720	1219	12.40	515	972	6-9
4. 51 45						45.4	45.2	40.9	30.8	22.5	2.40	41.34	70.87	3.54	888	1488	12.40	623	1152	7-10

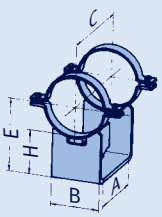

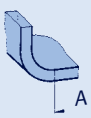

type	permissible load [lbs x 1000] 210	480	660	840	930	950	985	1040	1075	1110°F	E	A	B	C	H	weight [lbs]
49 51 13	10.3	9.0	6.5								13.94	13.78	9.49	19.69	3.94	93
49 51 14	18.9	14.8	11.0								17.87	13.78	11.02	19.69	7.87	115
49 51 25		13.9	13.7	12.1	11.2						21.81	15.75	12.99	21.65	11.81	154
49 51 35	29.0	28.1	24.1	20.2	19.1	18.9	18.2	10.8			21.81	15.55	12.99	22.24	11.81	178
49 51 45	33.3	30.3	29.0	26.1	24.3	24.1	22.3	15.3	11.7	8.5	21.81	15.75	12.99	22.83	11.81	192

Selection table OD 22" [558.8mm]

Temp. of medium >1110°F from page 4.52

Load doubling via type 77, see page 4.67

Pipe clamps, clamp bases, OD 22" [558.8mm] (ND 550/22"), type 42, 44, 46, 48, 49

	permissible load [lbs x 1000]														
type	210	480	660	840	930	950	985	1040	1075	1110°F	d_2	E	B	weight [lbs]	load group
42 56 19	3.82	2.92	2.23								1.19	13.78	3.54	53	5-6
Heat-resistant materials, see pages 0.9 and 4.4															

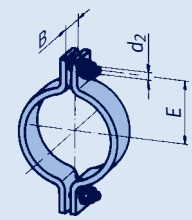

	permissible load [lbs x 1000]														
type	210	480	660	840	930	950	985	1040	1075	1110°F	d_3	E	B	weight [lbs]	load group
44 56 14	4.5	3.8	3.4								1.33	20.87	3.35	68	3-6
44 56 15	10.1	8.5	6.5								1.81	20.87	4.21	79	5-8
44 56 16	16.9	13.5	10.1								2.00	20.87	4.45	97	6-9
44 56 17	22.7	18.9	15.1								2.40	20.87	6.38	132	7-10
44 56 18	40.9	33.9	27.0								2.79	21.46	8.74	242	8-30
44 56 25			5.4	4.3	4.0						1.33	23.62	3.94	73	4-6
44 56 26			13.3	10.6	9.7						2.00	23.62	4.80	101	6-9
44 56 27			15.5	12.4	11.5						2.00	23.62	5.20	108	6-9
44 56 28			26.1	22.3	20.2						2.40	23.62	6.46	176	7-10
44 56 35					7.9	7.6	7.4	5.6			1.81	24.41	5.43	112	5-8
44 56 36					18.7	18.4	15.3	7.9			2.00	24.41	7.44	196	6-9
44 56 37		30.8	29.2	27.9	27.0	26.8	22.0	11.7			2.40	24.41	7.72	267	7-10
44 56 38	45.0	39.3	37.3	35.5	33.7	33.5	28.3	18.7			2.40	24.41	9.02	366	7-10
44 56 45								9.0	7.0	5.2	1.81	24.41	6.46	150	5-8
44 56 46								14.6	10.8	7.9	2.00	24.41	7.72	267	6-9
44 56 47								19.3	14.8	10.6	2.40	24.41	8.50	335	7-10
44 56 48	49.9	49.9	49.9	47.4	43.6	42.3	37.5	25.9	19.1	14.2	2.40	24.41	10.00	465	7-10

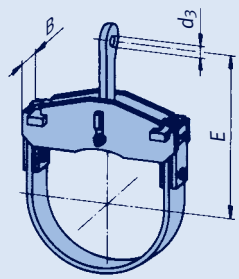

	permissible load [lbs x 1000]											L			type 46			type 48		load
type	210	480	660	840	930	950	985	1040	1075	1110°F	d_3	min	max	E_K	[lbs min]	[lbs max]	E_R	[lbs min]	[lbs max]	group
4.① 5611	9.9	7.6	5.6								1.33	32.28	61.02	1.57	163	255	6.69	142	257	4-6
4. 56 12	15.1	11.7	8.8								1.61	34.65	61.02	1.97	211	332	7.28	157	309	5-7
4. 56 13	29.4	22.0	17.3								2.00	36.22	61.02	2.36	334	504	7.68	237	420	6-9
4. 56 14	45.4	34.8	27.7								2.00	36.61	61.02	2.56	441	673	8.07	316	559	7-9
4. 56 21			9.7	9.2	6.7						1.33	37.80	66.93	2.17	168	280	7.09	162	278	4-6
4. 56 22			12.8	12.4	9.0						1.61	37.80	66.93	2.36	212	335	7.48	168	317	5-7
4. 56 23		29.9	29.4	26.5	19.3						2.00	43.31	66.93	2.56	375	555	8.07	296	481	6-9
4. 56 24	46.8	45.0	43.6	40.9	28.8						2.00	43.31	66.93	2.56	468	719	9.45	369	633	7-9
4. 56 31					11.9	11.9	9.2	4.9			1.61	43.31	74.80	2.36	276	447	7.87	210	413	4-7
4. 56 32					16.0	15.7	12.1	6.7			1.81	43.31	74.80	2.36	338	543	9.06	257	472	5-8
4. 56 33					21.4	20.2	15.7	9.0			1.81	43.31	74.80	2.76	406	653	9.45	305	552	5-8
4. 56 34	62.0	56.7	55.1	53.3	51.0	46.1	35.5	18.7			2.00	43.31	74.80	3.54	736	1148	10.63	515	922	6-9
4. 56 35	90.4	81.8	79.1	77.1	76.4	68.8	53.1	28.3			2.40	46.46	74.80	3.94	1047	1468	12.60	791	1274	7-10
4. 56 41								9.0	6.5	4.7	1.61	43.31	74.80	2.36	355	582	8.86	253	479	4-7
4. 56 42								12.1	9.0	6.7	1.81	43.31	74.80	2.36	424	693	8.66	307	580	5-8
4. 56 43								16.2	12.1	9.0	1.81	43.31	74.80	2.76	528	863	10.24	375	700	5-8
4. 56 44							38.7	32.6	24.5	18.0	2.00	43.31	74.80	3.54	862	1374	11.22	537	1066	6-9
4. 56 45							51.9	48.8	36.6	27.0	2.40	47.24	74.80	3.94	1151	1825	14.17	806	1403	7-10

① type 46

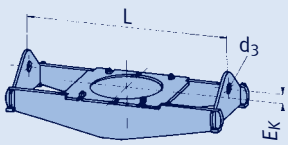

① type 48

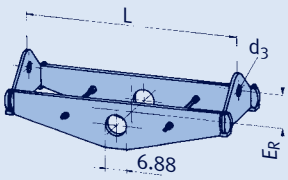

	permissible load [lbs x 1000]															
type	210	480	660	840	930	950	985	1040	1075	1110°F	E	A	B	C	H	weight [lbs]
49 56 13	12.4	9.9	7.2								14.96	15.75	9.49	22.44	3.94	156
49 56 14	24.1	18.9	13.9								18.90	15.55	11.50	23.03	7.87	196
49 56 25		15.7	14.8	12.6	11.7						22.83	17.72	13.50	24.41	11.81	220
49 56 35	36.2	33.0	28.6	23.6	22.3	21.8	20.5	12.4			22.83	17.72	13.78	25.00	11.81	256
49 56 45	37.5	33.7	31.9	28.8	26.8	25.0	24.1	16.4	12.4	9.0	22.83	17.72	13.78	25.59	11.81	264

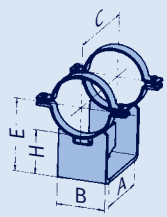

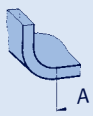

Selection table
OD 24" [609.6mm]

Temp. of medium >1110°F from page 4.52

Load doubling via type 77, see page 4.67

Pipe clamps, clamp bases, OD 24" [609.6mm] (ND 600/24"), type 42, 44, 46, 48, 49

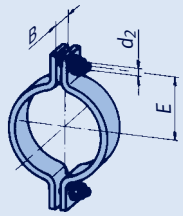

type	permissible load [lbs x 1000] 210	480	660	840	930	950	985	1040	1075	1110°F	d_2	E	B	weight [lbs]	load group
42 61 19	3.6	2.92	2.09								1.19	14.76	3.54	57	5-6
Heat-resistant materials, see pages 0.9 and 4.4															

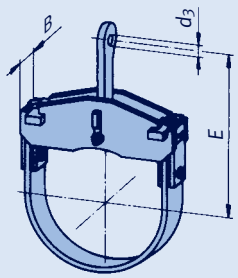

type	permissible load [lbs x 1000] 210	480	660	840	930	950	985	1040	1075	1110°F	d_3	E	B	weight [lbs]	load group
44 61 14	6.5	5.4	4.7								1.33	22.05	4.53	81	3-6
44 61 15	12.6	10.1	8.5								2.00	22.05	3.86	97	6-9
44 61 16	18.0	15.5	11.2								2.00	22.05	4.69	110	6-9
44 61 17	24.7	19.6	16.6								2.40	22.05	6.38	145	7-10
44 61 18	43.8	35.7	28.1								2.79	22.83	8.74	251	8-30
44 61 25			5.2	4.9	4.7						1.61	25.39	4.72	95	4-7
44 61 26			12.4	9.7	8.8						2.00	25.39	4.80	108	6-9
44 61 27			19.3	16.0	15.1						2.40	25.39	5.63	165	7-10
44 61 28			24.7	20.7	19.1						2.40	25.39	6.46	189	7-10
44 61 35					8.5	8.3	8.1	5.6			1.81	26.97	6.46	137	5-8
44 61 36					17.5	17.3	14.8	7.9			2.00	26.97	7.44	220	6-9
44 61 37		28.8	27.4	26.1	24.7	24.3	20.5	11.7			2.40	26.97	8.23	313	7-10
44 61 38	60.2	55.8	48.3	40.2	38.0	37.1	30.8	18.4			2.79	26.97	9.02	401	8-30
44 61 45								8.8	6.5	4.7	1.81	26.97	7.17	167	5-8
44 61 46								14.4	10.6	7.6	2.00	26.97	7.72	262	6-9
44 61 47								31.7	23.8	18.2	13.3	2.40	26.97	10.24	471	7-10
44 61 48	76.4	68.6	65.4	59.1	55.5	54.6	49.2	31.9	23.2	17.3	2.79	26.97	10.00	537	8-30

① type 46

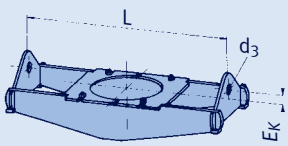

① type 48

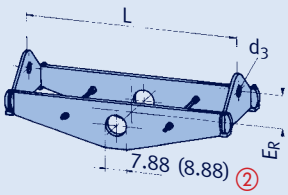

② For trunnion hole diameter 8.88 inch change last digit of type designation to a letter according to the following table. The weights may vary slightly.

change last digit from	to
48 61 .1	48 61 .A
48 61 .2	48 61 .B
48 61 .3	48 61 .C
48 61 .4	48 61 .D
48 61 .5	48 61 .E
48 61 .6	48 61 .F

e.g. 48 61 36 => 48 61 3F

type	permissible load [lbs x 1000] 210	480	660	840	930	950	985	1040	1075	1110°F	d_3	L min	L max	E_K	type 46 [lbs min]	type 46 [lbs max]	E_R	type 48 [lbs min]	type 48 [lbs max]	load group
4.①61 11	13.5	10.6	7.9								1.61	39.37	62.99	1.57	211	325	7.28	192	330	4-7
4. 61 12	20.0	15.5	12.4								1.81	39.37	62.99	1.77	287	419	7.68	234	381	6-8
4. 61 13	28.6	21.8	17.3								2.00	39.37	62.99	1.97	356	519	7.48	267	453	6-9
4. 61 14	41.8	31.7	25.2								2.00	39.37	62.99	2.17	469	687	8.07	327	563	7-9
4. 61 15	50.4	37.5	29.7								2.40	39.37	62.99	2.56	529	754	9.06	358	640	7-10
4. 61 21			13.5	12.8	9.4						1.61	39.76	70.87	2.36	251	385	7.48	205	383	4-7
4. 61 22			26.3	25.2	18.0						2.00	41.73	70.87	2.36	368	584	8.66	298	517	6-9
4. 61 23	43.4	41.8	41.4	38.4	27.0						2.00	42.91	70.87	2.36	504	766	9.25	370	669	7-9
4. 61 24	55.1	53.1	52.4	48.8	34.2						2.40	43.70	70.87	2.76	611	907	10.43	486	792	8-10
4. 61 31					12.4	11.9	9.2	4.9			1.61	47.24	78.74	2.36	318	507	8.66	267	469	4-7
4. 61 32					20.9	20.2	15.7	9.0			1.81	47.24	78.74	2.76	447	698	9.25	353	621	5-8
4. 61 33					28.6	27.7	21.6	11.9			1.81	47.24	78.74	3.54	564	880	11.02	433	757	5-8
4. 61 34	59.1	55.5	53.7	51.9	49.5	44.5	34.2	18.0			2.00	47.64	78.74	3.54	801	1232	11.22	565	993	6-9
4. 61 35	89.5	81.2	78.5	76.4	75.8	68.8	52.8	28.1			2.40	48.82	78.74	4.33	1161	1605	12.80	878	1343	7-10
4. 61 36	111.1	106.1	103.0	99.4	94.2	84.3	64.7	35.1			2.79	49.61	78.74	4.33	1292	1918	14.17	949	1594	8-30
4. 61 41								8.8	6.7	4.9	1.61	47.24	78.74	2.36	405	641	9.06	295	539	4-7
4. 61 42								16.0	12.1	9.0	1.81	47.24	78.74	2.76	581	923	10.83	416	767	5-8
4. 61 43								21.6	16.2	11.9	1.81	47.24	78.74	3.54	705	1141	11.02	499	915	5-8
4. 61 44								31.7	23.8	17.5	2.00	51.18	78.74	3.54	1000	1491	11.61	653	1153	6-9
4. 61 45							57.6	48.8	36.4	27.0	2.40	51.18	78.74	4.33	1296	2010	13.98	917	1555	7-10
4. 61 46						68.8	68.1	61.1	46.1	33.7	2.79	51.18	78.74	4.33	1589	2425	14.37	1037	1766	8-30

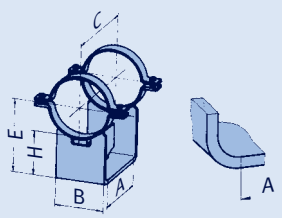

type	permissible load [lbs x 1000] 210	480	660	840	930	950	985	1040	1075	1110°F	E	A	B	C	H	weight [lbs]
49 61 13	17.1	16.6	12.1								17.91	15.75	10.75	22.44	5.91	176
49 61 14	26.3	19.8	14.4								19.88	15.55	12.24	23.03	7.87	209
49 61 25		16.4	15.7	14.4	13.3						23.82	17.72	14.25	24.41	11.81	238
49 61 35	38.7	34.2	29.4	24.3	22.9	22.3	21.1	13.3			23.82	17.72	14.57	25.00	11.81	269
49 61 45	42.9	38.9	37.1	33.3	31.0	28.1	27.2	18.7	13.9	10.1	23.82	17.72	14.57	25.59	11.81	282

Selection table OD 26" [660.4mm]

Temp. of medium >1110°F from page 4.52

Load doubling via type 77, see page 4.67

Pipe clamps, clamp bases, OD 26" [660.4mm] (ND 650/26"), type 42, 44, 46, 48, 49

	permissible load [lbs x 1000]														
type ①	210	480	660	840	930	950	985	1040	1075	1110°F	d_2	E	B	weight [lbs]	load group
42 66 19	3.37	2.7	1.98								1.19	15.75	3.54	62	5-6

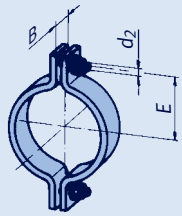

① Heat-resistant materials, see pages 0.9 and 4.4

	permissible load [lbs x 1000]														
type	210	480	660	840	930	950	985	1040	1075	1110°F	d_3	E	B	weight [lbs]	load group
44 66 14	7.6	6.3	5.4								1.61	24.02	4.53	90	4-7
44 66 15	13.0	10.6	8.1								2.00	24.02	4.45	106	6-9
44 66 16	19.3	16.0	12.8								2.00	24.02	6.38	145	6-9
44 66 17	29.2	23.8	19.1								2.40	24.02	6.38	174	7-10
44 66 18	41.1	32.6	26.1								2.79	24.02	8.27	260	8-30
44 66 19	68.8	54.2	39.1								2.79	25.00	9.02	379	9-30
44 66 25			4.9	4.9	4.5						1.61	26.77	4.72	97	4-7
44 66 26			13.7	10.8	9.9						2.00	26.77	5.20	121	6-9
44 66 27			22.7	18.7	17.1						2.40	26.77	6.22	183	7-10
44 66 28			38.0	31.9	30.1						2.79	26.77	7.72	297	8-30
44 66 35					9.0	8.8	8.5	5.6			1.81	27.56	6.46	143	5-8
44 66 36					18.0	17.8	17.3	11.7			2.00	27.56	7.72	280	6-9
44 66 37					25.4	25.2	21.6	11.9			2.40	27.56	8.23	322	7-10
44 66 38	63.2	58.5	50.8	42.3	39.3	38.9	31.2	18.7			2.79	27.56	9.02	421	8-30
44 66 45								8.8	6.7	4.9	1.81	27.56	6.46	174	5-8
44 66 46								17.5	13.5	9.9	2.00	27.56	8.50	352	6-9
44 66 47						36.0	34.4	25.2	18.9	13.5	2.40	27.56	10.24	489	7-10
44 66 48	76.4	70.1	67.0	60.7	56.9	56.0	49.9	31.9	23.6	17.5	2.79	27.56	10.00	551	8-30

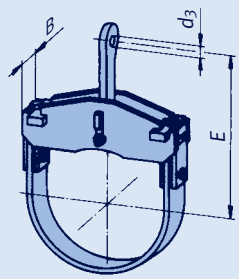

	permissible load [lbs x 1000]											L			type 46			type 48		load
type	210	480	660	840	930	950	985	1040	1075	1110°F	d_3	min	max	E_K	[lbs min]	[lbs max]	E_R	[lbs min]	[lbs max]	group
4.② 6611	13.5	10.3	8.1								1.61	40.55	64.96	1.57	241	349	7.87	233	383	5-7
4. 66 12	20.2	16.0	12.6								1.81	41.34	64.96	1.97	326	454	8.46	287	443	6-8
4. 66 13	30.6	22.9	18.2								2.00	41.34	64.96	2.17	398	580	7.87	314	521	6-9
4. 66 14	48.8	35.7	28.3								2.40	41.34	64.96	2.36	644	796	9.65	404	699	7-10
4. 66 15	57.8	44.1	34.8								2.40	41.34	64.96	2.76	724	931	9.25	449	744	8-10
4. 66 21			14.8	14.2	10.1						1.61	44.09	74.80	2.56	293	451	8.66	280	468	4-7
4. 66 22			26.5	25.0	18.0						2.00	49.21	74.80	2.56	446	640	9.65	379	597	6-9
4. 66 23		43.8	43.2	39.6	28.1						2.00	49.21	74.80	2.76	593	864	10.24	491	781	7-9
4. 66 24	57.6	55.3	54.6	50.1	35.5						2.40	50.39	74.80	3.15	717	1019	10.63	594	906	8-10
4. 66 31					13.7	13.5	10.6	5.6			1.61	49.21	80.71	2.56	372	581	8.86	319	546	4-7
4. 66 32					20.5	20.2	15.7	9.0			1.81	49.21	80.71	2.56	484	743	9.65	377	664	5-8
4. 66 33					34.8	31.2	24.1	12.8			1.81	49.21	80.71	3.54	703	1011	11.42	514	887	5-8
4. 66 34	61.4	56.2	54.4	52.6	50.6	45.4	34.8	18.4			2.00	49.21	80.71	3.54	874	1316	12.01	636	1110	6-9
4. 66 35	89.7	81.4	78.7	76.4	75.8	69.2	53.3	28.1			2.40	51.97	80.71	3.94	1230	1687	12.40	999	1385	7-10
4. 66 36	109.7	106.6	103.4	98.7	94.6	85.0	65.4	34.8			2.79	51.97	80.71	4.33	1395	2033	13.98	1037	1661	8-30
4. 66 41								10.1	7.4	5.4	1.61	49.21	80.71	2.56	478	737	9.25	352	629	4-7
4. 66 42								16.2	12.1	9.0	1.81	49.21	80.71	2.56	628	978	11.22	465	826	5-8
4. 66 43								22.5	16.6	12.1	1.81	49.21	80.71	3.54	802	1257	11.61	568	1003	5-8
4. 66 44								32.8	24.7	18.0	2.00	49.21	80.71	3.54	1055	1603	12.40	707	1261	6-9
4. 66 45							58.9	49.0	36.9	27.0	2.40	53.15	80.71	3.94	1398	2122	13.78	988	1645	7-10
4. 66 46						74.0	72.2	61.1	45.9	33.7	2.79	53.15	80.71	4.33	1663	2466	14.17	1115	1868	8-30

② type 46

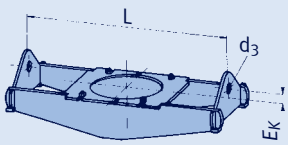

② type 48

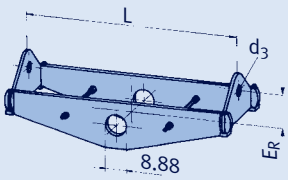

	permissible load [lbs x 1000]															
type	210	480	660	840	930	950	985	1040	1075	1110°F	E	A	B	C	H	weight [lbs]
49 66 13	20.0	17.1	12.6								18.90	15.75	11.81	22.44	5.91	189
49 66 14	27.4	21.6	16.0								20.87	15.55	12.99	23.03	7.87	222
49 66 25	25.4	22.3	18.2	14.8	13.7						24.80	17.72	14.57	24.41	11.81	249
49 66 35	37.5	36.2	36.0	28.8	27.0	26.1	23.2	16.2			24.80	17.72	15.00	25.59	11.81	295
49 66 45	48.1	43.6	41.6	37.3	34.6	32.6	31.2	21.6	16.2	11.9	24.80	17.72	15.00	25.59	11.81	300

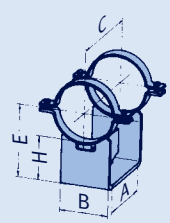

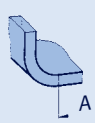

Selection table
OD 28" [711.2mm]

Temp. of medium >1110°F from page 4.52

Load doubling via type 77, see page 4.67

Pipe clamps, clamp bases, OD 28" [711.2mm] (ND 700/28"), type 42, 44, 46, 48, 49

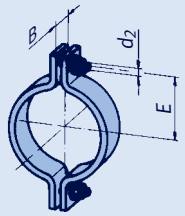

① Heat-resistant materials, see pages 0.9 and 4.4

	permissible load [lbs x 1000]													weight	load
type ①	210	480	660	840	930	950	985	1040	1075	1110°F	d_2	E	B	[lbs]	group
42 71 19	3.15	2.47	1.82								1.19	16.93	3.54	66	5-6

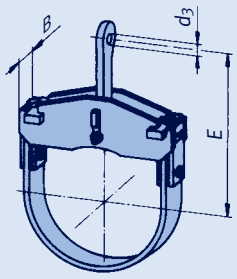

	permissible load [lbs x 1000]													weight	load
type	210	480	660	840	930	950	985	1040	1075	1110°F	d_3	E	B	[lbs]	group
44 71 14	9.4	7.9	6.7								1.61	24.80	5.63	128	4-7
44 71 15	21.4	17.1	14.2								2.00	24.80	6.38	156	6-9
44 71 16	28.1	22.9	18.7								2.40	24.80	6.61	181	7-10
44 71 17	34.2	27.2	19.8								2.79	24.80	7.13	218	8-30
44 71 18	42.3	32.6	25.9								2.79	24.80	8.74	293	8-30
44 71 19	69.0	54.6	39.6								2.79	25.59	9.25	412	9-30
44 71 25			7.4	5.8	5.4						1.61	28.35	4.80	112	5-7
44 71 26			12.6	9.9	9.2						2.00	28.35	5.43	139	6-9
44 71 27			17.5	15.3	13.9						2.40	28.35	5.87	194	7-10
44 71 28			26.5	22.0	19.8						2.79	28.35	6.46	220	8-30
44 71 29			37.8	31.7	29.7						2.79	28.35	7.72	315	8-30
44 71 35					9.0	8.8	8.5	5.6			1.81	29.13	6.46	159	5-8
44 71 36					16.2	16.0	15.1	7.9			2.00	29.13	7.44	238	6-9
44 71 37					24.5	24.3	20.7	11.7			2.40	29.13	8.23	344	7-10
44 71 38		52.8	46.1	38.2	36.0	35.3	31.0	18.4			2.79	29.13	9.02	436	8-30
44 71 39	76.4	71.0	61.6	51.5	48.3	47.2	39.3	20.5			2.79	29.13	10.51	566	9-30
44 71 45								9.4	7.2	5.2	1.81	29.13	7.44	209	5-8
44 71 46								20.2	14.8	10.6	2.00	29.13	9.02	396	6-9
44 71 47								25.9	19.1	14.2	2.40	29.13	10.87	535	7-10
44 71 48		67.0	64.1	58.0	54.4	53.5	49.7	32.1	23.6	17.5	2.79	29.13	10.00	577	8-30

② type 46

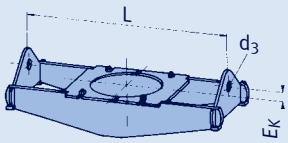

② type 48

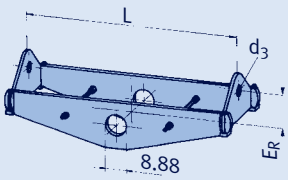

	permissible load [lbs x 1000]											L		type 46			type 48		load
type	210	480	660	840	930	950	985	1040	1075	1110°F	d_3	min	max	E_K	[lbs min]	[lbs max]	E_R	[lbs min]	[lbs max]	group
4.② 71 11	16.4	12.8	9.9								1.61	40.55	66.93	1.77	322	431	7.68	267	447	5-7
4. 71 12	26.8	20.2	16.2								1.81	42.52	66.93	2.17	430	578	9.45	310	531	6-8
4. 71 13	38.9	30.3	24.1								2.00	42.52	66.93	2.36	617	781	8.86	396	661	7-9
4. 71 14	52.6	40.7	32.4								2.00	42.91	66.93	3.15	689	922	9.06	462	753	7-9
4. 71 15	59.3	45.9	36.4								2.40	42.91	66.93	3.54	908	1064	8.46	532	843	8-10
4. 71 21			16.4	15.7	11.2						1.81	47.24	78.74	2.76	347	538	8.66	325	530	5-8
4. 71 22			26.1	25.0	18.0						2.00	47.64	78.74	2.76	483	705	9.45	386	661	6-9
4. 71 23		45.2	44.5	41.6	29.0						2.00	51.97	78.74	2.76	680	959	9.84	536	843	7-9
4. 71 24	57.3	55.1	54.4	50.1	35.5						2.40	53.15	78.74	3.54	802	1123	11.02	597	984	8-10
4. 71 31					14.2	13.5	10.3	6.1			1.61	51.18	82.68	2.76	407	635	9.25	340	573	4-7
4. 71 32					21.1	20.2	15.7	9.0			1.81	51.18	82.68	2.76	530	792	9.84	425	712	5-8
4. 71 33				40.5	39.3	35.5	27.2	14.4			2.00	51.18	82.68	3.94	786	1237	11.22	572	998	6-9
4. 71 34	61.4	56.2	54.4	52.6	50.6	45.4	34.8	18.4			2.00	51.57	82.68	3.94	970	1410	12.01	679	1169	6-9
4. 71 35	89.7	81.4	78.7	76.4	75.8	69.0	53.1	28.1			2.40	54.72	82.68	3.94	1334	1785	13.19	1010	1483	7-10
4. 71 36	119.8	109.7	106.3	102.7	98.9	88.6	68.1	36.4			2.79	57.09	82.68	5.12	1629	2273	13.58	1165	1775	8-30
4. 71 41								11.0	8.3	6.1	1.61	51.18	82.68	2.76	547	822	9.45	387	680	4-7
4. 71 42								16.2	12.1	9.0	1.81	51.18	82.68	2.76	689	1046	11.42	495	865	5-8
4. 71 43								25.9	19.3	14.2	2.00	51.18	82.68	3.94	955	1457	12.01	646	1133	6-9
4. 71 44								32.6	24.5	18.0	2.00	55.12	82.68	3.94	1167	1701	12.40	793	1317	6-9
4. 71 45							51.3	48.8	36.6	27.0	2.40	55.12	82.68	3.94	1508	2252	13.98	1014	1680	7-10
4. 71 46						76.0	75.3	63.6	47.9	34.8	2.79	57.09	82.68	5.12	1898	2774	14.57	1237	2000	8-30

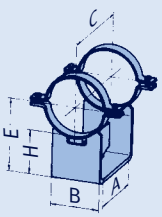

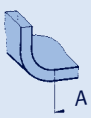

	permissible load [lbs x 1000]														weight
type	210	480	660	840	930	950	985	1040	1075	1110°F	E	A	B	C	H	[lbs]
49 71 13	21.4	17.8	13.0								19.92	15.75	12.60	22.44	5.91	203
49 71 14	30.3	23.8	17.5								21.89	15.55	13.78	23.03	7.87	236
49 71 25	26.5	25.6	22.5	18.4	17.1						25.83	17.72	15.51	25.00	11.81	284
49 71 35	45.6	43.8	42.3	35.3	33.0	30.3	27.0	18.4			25.83	17.72	16.26	25.59	11.81	324
49 71 45	53.9	48.3	46.0	41.3	38.4	37.0	36.0	25.0	18.7	13.7	25.83	17.72	16.26	25.59	11.81	324

Selection table OD 30" [762mm]

Temp. of medium >1110°F from page 4.52

Load doubling via type 77, see page 4.67

Pipe clamps, clamp bases, OD 30" [762mm] (ND 750/30"), type 42, 44, 46, 48, 49

	permissible load [lbs x 1000]														
type ①	210	480	660	840	930	950	985	1040	1075	1110°F	d_2	E	B	weight [lbs]	load group
42 76 19	2.92	2.25	1.73								1.19	17.91	3.54	68	5-6

	permissible load [lbs x 1000]														
type	210	480	660	840	930	950	985	1040	1075	1110°F	d_3	E	B	weight [lbs]	load group
44 76 14	12.1	10.1	8.3								1.61	26.38	6.14	159	4-7
44 76 15	18.7	15.1	11.9								2.00	26.38	6.38	161	6-9
44 76 16	27.0	21.4	17.1								2.40	26.38	6.61	185	7-10
44 76 17	33.9	26.1	19.6								2.79	26.38	7.13	225	8-30
44 76 18	44.1	33.9	27.0								2.79	26.38	8.74	293	8-30
44 76 19	69.2	53.7	39.1								2.79	27.17	9.25	414	9-30
44 76 25			12.1	9.7	9.0						2.00	29.92	5.43	148	6-9
44 76 26			17.1	14.4	13.3						2.40	29.92	5.87	200	7-10
44 76 27			26.3	21.8	19.8						2.79	29.92	6.46	247	8-30
44 76 28			35.1	27.2	25.4						2.79	29.92	7.72	326	8-30
44 76 29	69.0	63.8	54.4	43.2	39.6						2.79	29.92	8.58	454	9-30
44 76 35					9.0	8.8	8.5	5.8			1.81	30.31	6.73	189	5-8
44 76 36					16.0	15.7	15.1	7.9			2.00	30.31	7.44	269	6-9
44 76 37					24.3	23.8	20.5	11.7			2.40	30.31	8.23	359	7-10
44 76 38					35.5	35.1	31.2	18.7			2.79	30.31	8.86	485	8-30
44 76 39	76.4	76.4	76.0	63.8	59.8	58.7	45.4	23.8			2.79	30.31	10.24	654	9-30
44 76 45								11.2	8.5	6.3	1.81	30.31	7.72	293	5-8
44 76 46								20.2	14.8	10.6	2.00	30.31	8.58	416	6-9
44 76 47								25.9	19.1	14.2	2.40	30.31	10.87	557	7-10
44 76 48							50.1	32.1	23.8	17.5	2.79	30.31	10.24	628	8-30
44 76 49			76.4	76.4	76.4	76.4	69.5	43.8	32.8	24.3	2.79	30.31	10.98	826	9-30

	permissible load [lbs x 1000]											L			type 46			type 48		load
type	210	480	660	840	930	950	985	1040	1075	1110°F	d_3	min	max	E_K	[lbs min]	[lbs max]	E_R	[lbs min]	[lbs max]	group
4.② 7611	16.6	12.8	9.7								1.61	44.09	68.90	1.77	346	465	8.46	334	508	5-7
4. 76 12	27.0	20.7	16.4								1.81	44.09	68.90	2.17	477	634	8.46	364	583	6-8
4. 76 13	41.1	30.8	24.3								2.00	45.28	68.90	2.56	613	818	9.65	448	725	7-9
4. 76 14	53.1	40.9	32.4								2.00	45.28	68.90	3.15	805	1007	10.24	527	836	7-9
4. 76 15	69.2	53.3	42.3								2.40	45.28	68.90	3.54	1061	1223	10.04	626	971	8-10
4. 76 21			16.6	15.5	11.2						1.81	55.12	86.61	2.76	437	614	9.84	395	666	5-8
4. 76 22			26.3	25.0	18.0						2.00	55.12	86.61	2.76	546	816	9.84	461	852	6-9
4. 76 23		46.3	45.2	42.7	29.7						2.00	55.91	86.61	3.15	784	1173	11.81	650	1031	7-9
4. 76 24	67.7	65.0	64.1	58.9	41.4						2.40	58.66	86.61	3.54	1006	1437	11.81	819	1253	8-10
4. 76 31					16.0	15.5	11.9	6.7			1.61	59.06	90.55	3.15	542	799	10.24	449	726	4-7
4. 76 32					21.1	20.2	15.7	9.0			1.81	59.06	90.55	3.15	630	921	10.63	522	840	5-8
4. 76 33					33.5	31.5	24.5	13.5			2.00	59.06	90.55	3.94	864	1244	12.20	667	1077	6-9
4. 76 34				53.3	50.6	45.4	34.8	18.7			2.00	59.06	90.55	3.94	1117	1592	12.99	831	1358	6-9
4. 76 35	89.2	82.1	79.1	77.1	76.4	68.8	53.1	28.1			2.40	59.06	90.55	4.33	1517	2170	14.17	1237	1700	7-10
4. 76 36	135.6	124.1	120.3	116.2	113.8	103.6	79.6	42.3			2.79	62.20	90.55	5.51	2210	2864	15.75	1490	2246	8-30
4. 76 41								12.1	9.2	6.7	1.61	59.06	90.55	3.15	690	1012	10.83	507	848	4-7
4. 76 42								16.2	12.1	9.0	1.81	59.06	90.55	3.15	815	1248	11.22	608	1012	5-8
4. 76 43								24.3	18.4	13.5	2.00	59.06	90.55	3.94	1068	1625	13.19	781	1292	6-9
4. 76 44								32.6	24.5	18.0	2.00	59.06	90.55	3.94	1312	1966	13.39	927	1535	6-9
4. 76 45							56.9	49.2	36.6	27.0	2.40	59.06	90.55	4.33	1783	2567	14.37	1180	1961	7-10
4. 76 46						86.6	85.9	73.3	55.3	40.2	2.79	62.99	90.55	5.51	2361	3484	16.93	1689	2618	8-30

	permissible load [lbs x 1000]															
type	210	480	660	840	930	950	985	1040	1075	1110°F	E	A	B	C	H	weight [lbs]
49 76 13	25.0	21.6	16.0								20.91	15.75	13.50	23.23	5.91	229
49 76 14	35.3	27.9	20.5								22.87	15.55	14.57	23.03	7.87	253
49 76 25	33.9	32.4	25.6	21.1	19.6						26.81	17.52	15.75	25.00	11.81	300
49 76 35	61.6	53.5	48.8	40.9	38.4	37.1	33.0	23.4			26.81	17.72	16.54	25.59	11.81	346
49 76 45	62.0	56.2	53.5	48.1	44.7	43.4	41.8	28.8	21.6	15.7	26.81	17.72	16.54	25.59	11.81	346

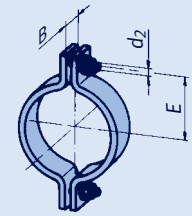

① Heat-resistant materials, see pages 0.9 and 4.4

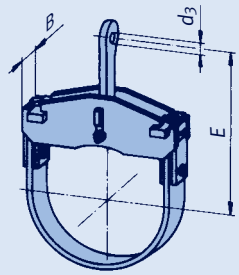

② type 46

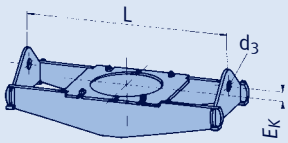

② type 48

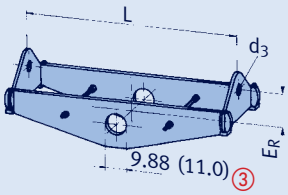

③ For trunnion hole diameter 11.0 inch change last digit of type designation to a letter according to the following table. The weights may vary slightly.

change last digit from	to
48 76 .1	48 76 .A
48 76 .2	48 76 .B
48 76 .3	48 76 .C
48 76 .4	48 76 .D
48 76 .5	48 76 .E
48 76 .6	48 76 .F

e.g. 48 76 11 => 48 76 1A

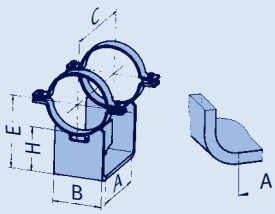

Selection table
OD 32" [812.8mm]

Temp. of medium >1110°F from page 4.52

Load doubling via type 77, see page 4.67

Pipe clamps, clamp bases, OD 32" [812.8mm] (ND 800/32"), type 42, 44, 46, 48, 49

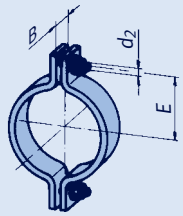

① Heat-resistant materials, see pages 0.9 and 4.4

type ①	permissible load [lbs x 1000] 210	480	660	840	930	950	985	1040	1075	1110°F	d_2	E	B	weight [lbs]	load group
42 81 19	2.92	2.25	1.66								1.19	18.90	3.54	73	5-6

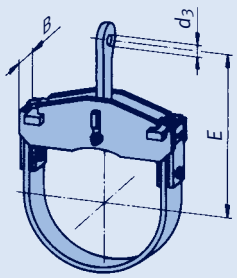

② type 46

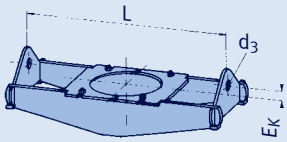

② type 48

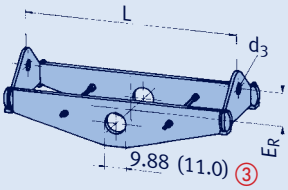

③ For trunnion hole diameter 11.0 inch change last digit of type designation to a letter according to the following table. The weights may vary slightly.

change last digit from	to
48 81 .1	48 81 .A
48 81 .2	48 81 .B
48 81 .3	48 81 .C
48 81 .4	48 81 .D
48 81 .5	48 81 .E
48 81 .6	48 81 .F

e.g. 48 81 22 => 48 81 2B

type	permissible load [lbs x 1000] 210	480	660	840	930	950	985	1040	1075	1110°F	d_3	E	B	weight [lbs]	load group
44 81 14	12.1	9.9	8.3								1.61	27.56	6.14	167	4-7
44 81 15	20.0	16.0	12.8								2.00	27.56	6.38	172	6-9
44 81 16	27.4	22.0	17.8								2.40	27.56	6.61	198	7-10
44 81 17	34.6	26.8	19.6								2.79	27.56	7.13	240	8-30
44 81 18	46.8	37.8	28.1								2.79	27.56	8.74	328	8-30
44 81 19	69.2	53.7	39.1								2.79	28.35	9.25	436	9-30
44 81 25			12.4	9.7	9.0						2.00	31.10	5.43	159	6-9
44 81 26			17.3	14.6	13.3						2.40	31.10	5.87	216	7-10
44 81 27			26.8	22.5	19.6						2.79	31.10	6.73	264	8-30
44 81 28			36.9	28.6	26.8						2.79	31.10	7.72	337	8-30
44 81 29	69.0	65.6	55.8	44.1	40.5						2.79	31.10	8.58	480	9-30
44 81 35					15.5	15.3	15.1	7.9			2.00	31.89	7.44	267	6-9
44 81 36					23.4	23.2	19.3	11.7			2.40	31.89	8.23	381	7-10
44 81 37					33.7	33.5	31.0	18.7			2.79	31.89	8.86	509	8-30
44 81 38					35.7	35.5	34.4	20.0			2.79	31.89	10.87	581	8-30
44 81 39	76.4	76.4	75.5	62.9	58.2	58.0	45.2	23.6			2.79	31.89	10.24	687	9-30
44 81 45								19.1	14.6	10.6	2.00	31.89	8.58	434	6-9
44 81 46								25.6	18.9	14.2	2.40	31.89	11.14	579	7-10
44 81 47							49.0	31.9	23.6	17.5	2.79	31.89	10.24	661	8-30
44 81 48			76.4	76.4	76.2	75.1	69.7	44.3	32.8	24.3	2.79	31.89	11.26	903	9-30

type	permissible load [lbs x 1000] 210	480	660	840	930	950	985	1040	1075	1110°F	d_3	L min	L max	E_K	type 46 [lbs min]	type 46 [lbs max]	E_R	type 48 [lbs min]	type 48 [lbs max]	load group
4.② 81 11	20.2	15.3	12.4								1.81	47.24	70.87	1.77	427	554	8.46	358	558	5-8
4. 81 12	30.3	22.9	18.2								2.00	47.24	70.87	2.36	569	748	9.45	425	654	6-9
4. 81 13	47.2	35.1	27.7								2.40	47.24	70.87	2.76	797	985	10.04	534	830	7-10
4. 81 14	60.9	46.8	37.1								2.40	47.24	70.87	3.54	1059	1197	9.65	635	968	8-10
4. 81 15	72.6	56.2	44.5								2.79	47.24	70.87	3.94	1216	1408	10.43	697	1067	9-30
4. 81 21			16.6	15.7	11.2						1.81	59.06	90.55	3.15	487	684	9.84	446	698	5-8
4. 81 22			26.3	25.0	18.0						2.00	59.06	90.55	3.15	615	891	9.84	542	893	6-9
4. 81 23		50.8	49.2	46.5	32.6						2.40	61.42	90.55	3.54	942	1336	12.60	801	1176	7-10
4. 81 24	74.6	71.7	70.8	65.0	45.9						2.79	61.42	90.55	3.94	1203	1684	12.60	933	1438	8-30
4. 81 31					18.2	18.0	13.9	7.6			1.81	62.99	94.49	3.54	658	942	11.02	519	828	5-8
4. 81 32					23.4	22.9	18.0	10.3			1.81	62.99	94.49	3.54	786	1116	11.81	606	965	5-8
4. 81 33					33.5	31.5	24.5	13.5			2.00	62.99	94.49	3.94	957	1343	12.99	735	1159	6-9
4. 81 34				51.3	49.5	44.5	34.2	18.2			2.00	62.99	94.49	4.33	1212	1712	13.78	906	1441	6-9
4. 81 35	89.9	81.6	78.9	76.7	76.0	68.8	53.1	28.1			2.40	62.99	94.49	4.72	1673	2344	14.57	1191	1904	7-10
4. 81 36	148.8	136.2	132.0	127.7	125.0	112.9	86.8	46.5			2.79	62.99	94.49	5.91	2614	3583	16.34	1652	2528	8-30
4. 81 41								13.5	10.1	7.6	1.81	62.99	94.49	3.54	823	1173	11.61	621	997	5-8
4. 81 42								18.4	13.9	10.3	1.81	62.99	94.49	3.54	1012	1475	11.81	713	1173	5-8
4. 81 43								24.3	18.2	13.5	2.00	62.99	94.49	3.94	1245	1757	13.39	856	1378	6-9
4. 81 44								33.0	24.3	18.0	2.00	62.99	94.49	4.33	1478	2162	13.78	1017	1647	6-9
4. 81 45							56.2	49.2	36.6	27.0	2.40	62.99	94.49	4.72	1958	2775	14.57	1290	2105	7-10
4. 81 46						89.5	88.6	82.1	61.4	45.0	2.79	62.99	94.49	5.91	2828	4073	18.31	1878	2990	8-30

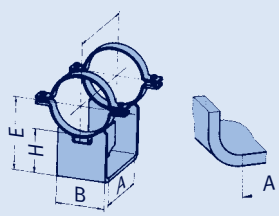

type	permissible load [lbs x 1000] 210	480	660	840	930	950	985	1040	1075	1110°F	E	A	B	C	H	weight [lbs]
49 81 13	26.5	22.9	16.6								21.89	15.75	14.25	23.23	5.91	240
49 81 14	36.4	28.8	21.1								23.86	15.55	15.75	23.03	7.87	269
49 81 25	35.5	34.2	29.2	24.3	22.5						27.80	17.52	16.73	25.00	11.81	319
49 81 35	62.9	54.6	49.0	41.4	38.9	37.8	33.7	23.8			27.80	17.72	16.73	25.59	11.81	355
49 81 45	74.6	67.7	64.3	57.8	54.0	52.2	47.2	34.6	26.1	19.1	27.80	17.52	16.73	25.59	11.81	368

Selection table OD 34" [863.6mm]

Temp. of medium >1110°F from page 4.52

Load doubling via type 77, see page 4.67

Pipe clamps, clamp bases, OD 34" [863.6mm] (ND 850/34"), type 42, 44, 46, 48, 49

	permissible load [lbs x 1000]													weight	load
type ①	210	480	660	840	930	950	985	1040	1075	1110°F	d_2	E	B	[lbs]	group
42 86 19	2.92	2.25	1.62								1.19	19.84	3.94	81	5-6

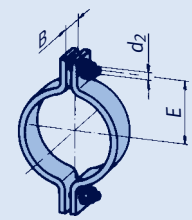

① Heat-resistant materials, see pages 0.9 and 4.4

	permissible load [lbs x 1000]													weight	load
type	210	480	660	840	930	950	985	1040	1075	1110°F	d_3	E	B	[lbs]	group
44 86 14	11.5	9.4	8.1								1.61	28.94	6.73	178	4-7
44 86 15	19.8	15.7	13.3								2.00	28.94	6.38	189	6-9
44 86 16	33.9	26.8	19.6								2.40	28.94	7.99	258	7-10
44 86 17	46.8	38.9	28.1								2.79	28.94	8.74	355	8-30
44 86 18	67.4	49.7	39.6								2.79	28.94	9.76	474	8-30
44 86 19	69.2	53.5	38.7								2.79	29.92	9.02	474	9-30
44 86 25			17.5	14.6	13.5						2.00	32.09	5.87	222	7-9
44 86 26			26.8	22.5	19.6						2.79	32.09	6.73	273	8-30
44 86 27			37.8	30.8	28.1						2.79	32.09	7.80	372	8-30
44 86 28			42.3	33.5	30.6						2.79	32.09	8.58	491	8-30
44 86 29	69.0	66.5	57.1	45.2	41.4						2.79	32.09	8.58	513	9-30
44 86 35					22.9	22.7	19.6	11.7			2.40	33.27	8.27	421	7-10
44 86 36					33.9	33.7	31.0	18.4			2.79	33.27	8.86	546	8-30
44 86 37					42.0	41.6	39.3	20.5			2.79	33.27	10.87	661	8-30
44 86 38	76.4	76.4	74.9	62.9	59.1	58.5	45.0	23.4			2.79	33.27	10.63	703	9-30
44 86 46								24.5	18.9	13.5	2.40	33.27	10.87	648	7-10
44 86 47							48.6	31.9	23.6	17.5	2.79	33.27	10.87	736	8-30
44 86 48			76.4	76.4	76.4	75.3	69.2	44.3	32.8	24.3	2.79	33.27	11.26	971	9-30

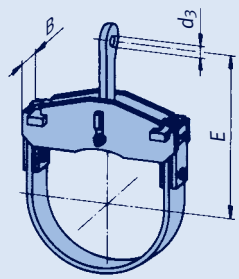

	permissible load [lbs x 1000]											L		type 46			type 48		load
type	210	480	660	840	930	950	985	1040	1075	1110°F	d_3	min	max	E_K	[lbs min]	[lbs max]	E_R	[lbs min]	[lbs max]	group
4.② 8611	20.2	15.7	12.4								1.81	48.43	72.83	1.77	489	602	8.46	399	612	5-8
4. 86 12	30.3	22.7	18.0								2.00	48.43	72.83	2.36	624	784	9.45	472	717	6-9
4. 86 13	45.4	35.1	27.9								2.40	49.21	72.83	2.76	855	1059	10.04	584	894	7-10
4. 86 14	61.4	46.8	37.1								2.40	49.21	72.83	3.54	1136	1290	9.65	693	1044	8-10
4. 86 15	71.7	55.8	44.1								2.79	49.21	72.83	3.94	1271	1474	10.43	757	1137	9-30
4. 86 21			16.4	15.7	11.2						1.81	61.02	92.52	3.15	527	726	9.84	501	781	5-8
4. 86 22			26.1	24.7	18.0						2.00	61.02	92.52	3.15	666	943	9.84	605	999	6-9
4. 86 23		50.8	49.0	40.7	32.8						2.40	61.02	92.52	3.54	997	1421	12.60	836	1275	7-10
4. 86 24	74.4	71.5	70.6	58.9	45.9						2.79	61.02	92.52	3.94	1257	1774	12.60	982	1499	8-30
4. 86 31					18.7	18.0	13.9	7.6			1.81	64.96	96.46	3.54	710	997	11.02	562	885	5-8
4. 86 32					22.7	22.5	18.0	10.3			1.81	64.96	96.46	3.54	841	1174	11.81	653	1038	5-8
4. 86 33					34.4	31.5	24.5	13.5			2.00	64.96	96.46	3.94	1030	1417	12.99	791	1235	6-9
4. 86 34				50.4	49.0	44.3	34.2	18.0			2.00	64.96	96.46	4.33	1293	1804	13.78	1002	1535	6-9
4. 86 35	89.2	81.2	78.5	76.4	75.8	68.8	52.8	27.9			2.40	64.96	96.46	4.72	1782	2464	14.57	1224	1943	7-10
4. 86 36	148.6	136.0	131.7	127.5	124.8	113.3	87.2	46.3			2.79	64.96	96.46	5.91	2768	3755	16.34	1832	2665	8-30
4. 86 41								13.5	10.1	7.6	1.81	64.96	96.46	3.54	891	1240	11.61	670	1059	5-8
4. 86 42								18.2	13.7	10.3	1.81	64.96	96.46	3.54	1089	1557	11.81	769	1240	5-8
4. 86 43								23.8	18.0	13.5	2.00	64.96	96.46	3.94	1325	1850	13.39	916	1459	6-9
4. 86 44								32.1	24.3	18.0	2.00	64.96	96.46	4.33	1556	2239	13.78	1052	1705	6-9
4. 86 45							47.7	47.4	36.4	27.0	2.40	64.96	96.46	4.72	2080	2915	14.57	1332	2167	7-10
4. 86 46							83.9	80.7	61.1	45.0	2.79	64.96	96.46	5.91	3010	4284	18.31	2000	3145	8-30

② type 46

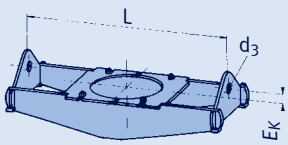

② type 48

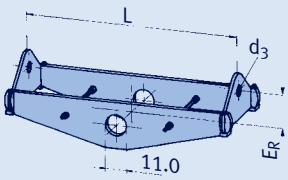

	permissible load [lbs x 1000]															weight
type	210	480	660	840	930	950	985	1040	1075	1110°F	E	A	B	C	H	[lbs]
49 86 13	30.6	25.9	18.9								22.91	17.72	14.17	25.59	5.91	278
49 86 14	54.4	42.7	34.6								24.88	17.52	16.54	25.98	7.87	319
49 86 25	45.6	39.6	34.4	31.2	29.0						28.82	19.49	17.76	28.15	11.81	388
49 86 35	91.2	79.8	68.6	56.7	53.5	52.4	47.0	33.3			28.82	19.49	18.90	28.15	11.81	441
49 86 45	120.4	108.1	103.4	93.1	79.4	71.9	63.6	44.7	35.1	26.3	28.82	19.49	19.09	29.72	11.81	511

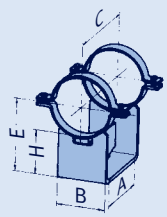

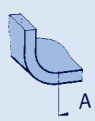

Selection table
OD 36" [914.4mm]

Temp. of medium >1110°F from page 4.52

Load doubling via type 77, see page 4.67

Pipe clamps, clamp bases, OD 36" [914.4mm] (ND 900/36"), type 42, 44, 46, 48, 49

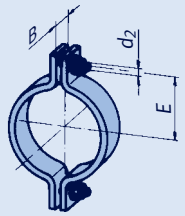

① Heat-resistant materials, see pages 0.9 and 4.4

	permissible load [lbs x 1000]													weight	load
type ①	210	480	660	840	930	950	985	1040	1075	1110°F	d_2	E	B	[lbs]	group
42 91 19	2.92	2.25	1.71								1.19	20.87	3.94	88	5-6

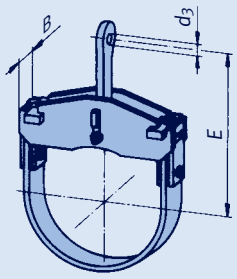

	permissible load [lbs x 1000]													weight	load
type	210	480	660	840	930	950	985	1040	1075	1110°F	d_3	E	B	[lbs]	group
44 91 14	11.5	9.7	8.1								1.61	29.92	6.14	183	4-7
44 91 15	19.8	15.7	12.6								2.00	29.92	6.38	189	6-9
44 91 16	34.4	26.3	19.6								2.40	29.92	7.91	264	7-10
44 91 17	46.8	38.2	28.1								2.79	29.92	8.74	359	8-30
44 91 18	57.1	47.0	37.5								2.79	29.92	9.02	485	8-30
44 91 19	69.2	53.5	38.7								2.79	30.91	9.25	485	9-30
44 91 25			17.5	14.6	13.5						2.00	33.07	5.87	236	7-9
44 91 26			27.0	22.7	19.8						2.79	33.07	6.73	293	8-30
44 91 27			38.0	29.9	28.1						2.79	33.07	7.72	370	8-30
44 91 28			42.3	33.5	30.6						2.79	33.07	8.58	493	9-30
44 91 29	69.0	66.8	57.3	45.2	41.4						2.79	33.07	8.58	524	9-30
44 91 35					22.9	22.7	19.1	11.7			2.40	34.25	8.23	421	7-10
44 91 36					34.2	33.7	31.2	18.7			2.79	34.25	8.86	553	8-30
44 91 37					41.8	41.4	38.2	20.2			2.79	34.25	10.87	637	9-30
44 91 38	76.4	76.4	74.0	61.6	57.3	56.7	45.4	23.6			2.79	34.25	10.24	749	9-30
44 91 46								25.9	19.1	14.2	2.40	34.25	11.14	645	7-10
44 91 47							49.0	32.1	23.6	17.5	2.79	34.25	10.24	727	8-30
44 91 48			76.4	76.4	76.4	75.3	69.2	44.5	32.8	24.3	2.79	34.25	11.26	967	9-30

② type 46

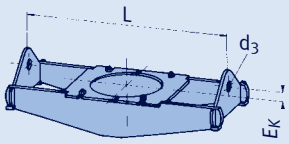

② type 48

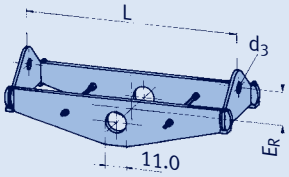

	permissible load [lbs x 1000]											L		type 46			type 48			load
type	210	480	660	840	930	950	985	1040	1075	1110°F	d_3	min	max	E_K	[lbs min]	[lbs max]	E_R	[lbs min]	[lbs max]	group
4.② 91 11	21.6	16.2	12.8								1.81	51.18	74.80	1.97	550	696	10.04	429	689	5-8
4. 91 12	30.3	22.9	18.2								2.00	51.18	74.80	2.36	674	841	9.45	527	792	6-9
4. 91 13	48.1	35.5	28.1								2.40	51.18	74.80	2.76	941	1139	9.45	628	954	7-10
4. 91 14	62.9	47.2	37.5								2.40	51.18	74.80	3.54	1227	1394	10.43	748	1107	8-10
4. 91 15	74.6	56.0	44.3								2.79	51.18	74.80	3.94	1366	1592	11.61	825	1218	9-30
4. 91 21			18.9	18.2	13.5						1.81	62.99	94.49	3.15	609	832	9.84	547	835	5-8
4. 91 22			27.4	26.3	19.1						2.00	62.99	94.49	3.54	772	1037	10.63	638	1033	6-9
4. 91 23		48.3	46.8	44.3	31.5						2.40	62.99	94.49	3.94	1049	1459	11.81	821	1278	7-10
4. 91 24	71.3	68.6	67.7	61.8	45.0						2.79	62.99	94.49	3.94	1327	1845	12.80	1028	1543	8-30
4. 91 25	87.0	83.4	82.5	74.6	54.0						2.79	62.99	94.49	4.33	1571	2096	13.58	1110	1712	9-30
4. 91 31					20.5	20.2	15.7	9.0			1.81	66.93	98.43	3.94	815	1141	11.81	652	1015	5-8
4. 91 32					31.5	31.2	24.5	13.5			1.81	66.93	98.43	4.33	1095	1456	12.99	826	1273	5-8
4. 91 33					45.6	41.6	32.6	18.0			2.00	66.93	98.43	4.33	1324	1826	13.78	980	1493	6-9
4. 91 34	99.8	95.3	92.2	89.7	88.8	80.9	62.3	33.0			2.40	66.93	98.43	5.12	2274	3079	15.16	1952	2564	7-10
4. 91 35	152.9	141.6	137.1	132.6	129.5	116.5	89.5	48.1			2.79	69.29	98.43	5.12	2998	3986	17.91	2148	2867	8-30
4. 91 36	152.9	152.9	152.9	152.9	152.0	136.7	105.2	56.7			2.79	70.08	98.43	6.30	3416	4469	17.32	2178	3131	9-30
4. 91 41								16.2	12.1	9.0	1.81	66.93	98.43	3.94	1083	1530	11.81	753	1209	5-8
4. 91 42								24.5	18.2	13.5	1.81	66.93	98.43	4.33	1417	1948	13.58	962	1515	5-8
4. 91 43								32.6	24.7	18.0	2.00	66.93	98.43	4.33	1697	2392	14.57	1107	1767	6-9
4. 91 44							58.5	57.3	43.2	31.5	2.40	66.93	98.43	5.12	2426	3408	17.52	1594	2580	7-10
4. 91 45							92.2	81.8	61.1	45.0	2.79	70.87	98.43	5.12	3252	4482	17.52	2174	3244	8-30
4. 91 46						107.0	105.2	98.5	74.2	54.0	2.79	70.87	98.43	6.30	3628	4996	19.29	2429	3623	9-30

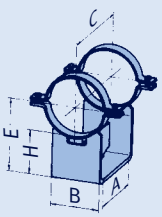

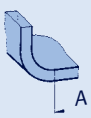

	permissible load [lbs x 1000]															weight
type	210	480	660	840	930	950	985	1040	1075	1110°F	E	A	B	C	H	[lbs]
49 91 13	30.8	26.1	19.1								23.90	17.72	14.25	25.59	5.91	284
49 91 14	56.0	43.4	35.3								25.87	17.72	16.54	25.98	7.87	328
49 91 25	45.6	39.6	34.4	31.5	29.2						29.80	19.69	17.76	28.15	11.81	396
49 91 35	89.2	77.8	69.5	57.3	54.0	53.1	47.0	33.3			29.80	19.69	19.02	28.15	11.81	447
49 91 45	121.8	109.3	104.8	94.2	80.0	72.6	64.1	45.2	35.1	26.5	29.80	19.49	19.02	29.72	11.81	520

Selection table OD 38" [965.2mm]

Temp. of medium >1110°F from page 4.52

Load doubling via type 77, see page 4.67

Pipe clamps, clamp bases, OD 38" [965.2mm] (ND 950/38"), type 42, 44, 46, 48, 49

	permissible load [lbs x 1000]														
type ①	210	480	660	840	930	950	985	1040	1075	1110°F	d_2	E	B	weight [lbs]	load group
42 97 19	2.92	2.25	1.66								1.19	21.81	3.94	90	5-6

	permissible load [lbs x 1000]														
type	210	480	660	840	930	950	985	1040	1075	1110°F	d_3	E	B	weight [lbs]	load group
44 97 14	11.5	9.7	8.1								1.61	30.91	6.73	196	4-7
44 97 15	20.0	16.0	13.5								2.00	30.91	6.38	207	6-9
44 97 16	33.5	26.8	19.6								2.40	30.91	7.99	286	7-10
44 97 17	46.8	38.9	28.3								2.79	31.50	8.74	394	8-30
44 97 18	67.2	52.4	39.3								2.79	31.50	9.76	531	9-30
44 97 19	82.3	66.3	48.3								3.18	32.28	10.87	681	10-40
44 97 25			19.1								2.00	34.06	7.17	260	7-9
44 97 26			27.7	23.2	21.8						2.79	34.06	7.44	317	8-30
44 97 27			38.4	30.8	28.3						2.79	34.06	8.27	425	8-30
44 97 28			55.3	43.4	40.0						2.79	34.06	8.58	542	9-30
44 97 29	85.4	77.8	67.2	55.5	51.0						3.18	34.65	10.04	698	10-40
44 97 35					22.7	22.3	19.1	11.7			2.40	35.43	8.27	441	7-10
44 97 36					33.3	32.8	31.5	18.7			2.79	35.43	8.86	584	8-30
44 97 37					42.3	41.6	38.2	20.5			2.79	35.43	10.63	670	8-30
44 97 38					45.2	44.7	43.2	23.6			2.79	35.43	10.87	775	9-30
44 97 39		76.4	69.9	58.2	54.2	53.5	52.2	34.8			2.79	35.43	11.26	1022	9-30
44 97 46								24.1	18.7	13.7	2.40	35.43	10.87	676	7-10
44 97 47								32.1	23.8	17.5	2.79	35.43	10.87	769	8-30
44 97 48			76.4	76.4	76.4	75.3	68.6	44.5	33.0	24.3	2.79	35.43	11.26	1020	9-30

	permissible load [lbs x 1000]											L			type 46			type 48		load
type	210	480	660	840	930	950	985	1040	1075	1110°F	d_3	min	max	E_K	[lbs min]	[lbs max]	E_R	[lbs min]	[lbs max]	group
4.②9711	21.6	16.2	12.8								1.81	53.15	78.74	1.97	605	761	11.61	566	836	5-8
4. 97 12	30.1	22.7	18.0								2.00	55.12	78.74	2.36	740	938	11.81	617	911	6-9
4. 97 13	48.6	36.0	28.6								2.40	55.12	78.74	2.76	990	1233	12.40	717	1079	7-10
4. 97 14	62.5	47.0	37.3								2.40	55.12	78.74	3.54	1322	1555	12.99	828	1213	8-10
4. 97 15	86.1	64.5	51.0								2.79	55.12	78.74	3.94	1695	1885	12.99	1009	1467	9-30
4. 97 16	110.6	83.2	65.9								3.18	55.12	78.74	3.94	1959	2333	14.57	1172	1711	10-40
4. 97 21			18.7	18.0	13.5						1.81	64.96	96.46	3.15	652	893	12.01	622	954	5-8
4. 97 22			26.5	25.6	19.1						2.00	64.96	96.46	3.54	826	1094	13.58	734	1199	6-9
4. 97 23			46.8	40.7	32.1						2.40	64.96	96.46	3.94	1152	1535	14.76	1086	1531	7-10
4. 97 24		68.3	66.3	56.2	45.0						2.79	64.96	96.46	3.94	1413	1936	15.94	1169	1730	8-30
4. 97 25	97.8	96.0	94.2	77.6	62.9						2.79	64.96	96.46	4.33	1818	2368	17.72	1464	2101	9-30
4. 97 26	129.3	125	121.8	99.1	80.9						3.18	66.93	96.46	4.33	2171	2866	18.11	1738	2475	10-40
4. 97 31					20.2	20.0	15.7	9.0			1.81	68.90	100.39	3.94	900	1251	12.99	762	1236	5-8
4. 97 32					31.2	31.2	24.5	13.5			1.81	68.90	100.39	4.33	1166	1534	13.58	866	1391	5-8
4. 97 33					45.2	41.6	32.6	18.0			2.00	68.90	100.39	4.33	1413	1917	15.55	1088	1626	6-9
4. 97 34				86.1	85.4	80.7	62.0	33.0			2.40	68.90	100.39	5.12	2387	3217	16.93	2173	2674	7-10
4. 97 35	152.9	140.7	136.2	131.7	129.0	116.9	89.9	47.9			2.79	69.69	100.39	5.12	3145	4122	18.31	2024	3020	8-30
4. 97 36	152.9	152.9	152.9	152.9	151.3	137.6	105.9	56.2			2.79	69.69	100.39	6.30	3736	4681	19.09	2316	3349	9-30
4. 97 37	170.9	170.9	166.8	160.7	154.9	153.8	128.1	69.7			3.18	69.69	100.39	6.30	3655	4968	20.47	2603	3808	10-40
4. 97 41								16.0	11.9	9.0	1.81	68.90	100.39	3.94	1162	1610	11.81	821	1311	5-8
4. 97 42								23.8	18.0	13.5	1.81	68.90	100.39	4.33	1516	2047	13.58	1043	1627	5-8
4. 97 43								31.5	23.8	18.0	2.00	68.90	100.39	4.33	1774	2474	14.57	1199	1899	6-9
4. 97 44								56.7	42.5	31.5	2.40	68.90	100.39	5.12	2600	3568	17.52	1711	2696	7-10
4. 97 45							86.6	82.7	60.7	45.0	2.79	68.90	100.39	5.12	3352	4695	17.52	2109	3329	8-30
4. 97 46							106.1	94.9	71.5	53.7	2.79	68.90	100.39	6.30	3760	5223	19.29	2467	3819	9-30
4. 97 47						131.7	130.6	125.2	94.2	69.7	2.79	70.08	100.39	6.30	4559	6398	19.29	2855	4422	9-30

	permissible load [lbs x 1000]															weight
type	210	480	660	840	930	950	985	1040	1075	1110°F	E	A	B	C	H	[lbs]
49 97 13	31.2	26.5	19.6								24.92	17.72	15.75	25.59	5.91	302
49 97 14	56.0	44.3	36.0								26.89	17.52	18.11	25.98	7.87	350
49 97 25	58.0	50.6	40.0	32.8	30.6						30.83	19.69	19.29	28.15	11.81	421
49 97 35	93.1	80.5	69.2	57.3	54.0	53.3	51.9	36.6			30.83	19.69	20.47	28.15	11.81	471
49 97 45	123.8	112.4	106.8	96.0	86.8	76.2	67.4	47.7	37.1	28.1	30.83	19.69	20.47	29.72	11.81	548

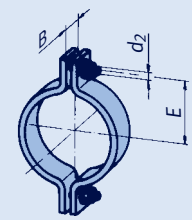

① Heat-resistant materials, see pages 0.9 and 4.4

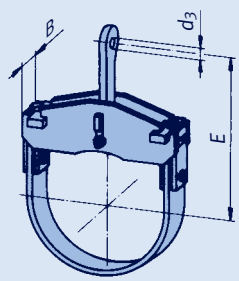

② type 46

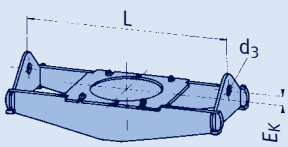

② type 48

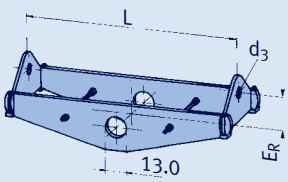

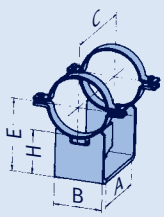

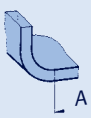

Selection table OD 40" [1016mm]

Temp. of medium >1110°F from page 4.52

Load doubling via type 77, see page 4.67

Pipe clamps, clamp bases, OD 40" [1016mm] (ND 1000/40"), type 42, 44, 46, 48, 49

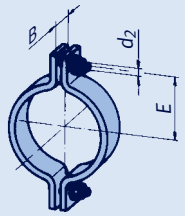

① Heat-resistant materials, see pages 0.9 and 4.4

	permissible load [lbs x 1000]														
type ①	210	480	660	840	930	950	985	1040	1075	1110°F	d_2	E	B	weight [lbs]	load group
42 T0 19	6.97	5.17	3.6								1.19	23.31	5.91	187	5-6

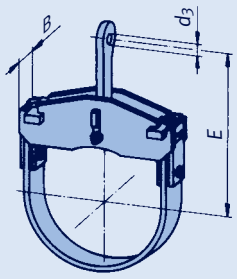

	permissible load [lbs x 1000]														
type	210	480	660	840	930	950	985	1040	1075	1110°F	d_3	E	B	weight [lbs]	load group
44 T0 14	20.7	16.4	13.5								2.00	31.89	6.38	214	6-9
44 T0 15	33.5	27.0	19.6								2.40	31.89	7.99	302	7-10
44 T0 16	46.8	38.9	28.1								2.79	33.46	8.74	405	8-30
44 T0 17	64.7	51.7	39.1								2.79	33.46	9.76	555	9-30
44 T0 18	83.9	66.3	47.7								3.18	33.86	10.87	711	10-40
44 T0 19	91.0	80.7	58.2								3.58	36.02	10.87	815	20-50
44 T0 24			19.6	15.5	14.2						2.00	35.04	7.17	271	7-9
44 T0 25			27.7	23.2	21.8						2.79	35.04	7.44	330	8-30
44 T0 26			38.4	30.8	28.1						2.79	35.04	8.27	436	8-30
44 T0 27			56.0	44.3	40.5						2.79	35.04	8.58	559	9-30
44 T0 28			67.2	54.4	49.9						3.18	35.83	10.87	718	10-40
44 T0 29	85.4	85.4	77.1	62.9	58.0						3.18	35.83	11.14	828	10-40
44 T0 35					22.3	22.0	18.9	11.7			2.40	36.61	8.27	452	7-10
44 T0 36					32.8	32.4	31.2	18.7			2.79	36.61	8.86	604	8-30
44 T0 37					42.3	41.6	38.2	20.5			2.79	36.61	10.63	685	8-30
44 T0 38					44.7	44.3	43.2	23.6			2.79	36.61	10.87	795	9-30
44 T0 39					54.4	53.7	52.2	34.8			2.79	36.61	11.26	1053	9-30
44 T0 46								24.1	18.4	13.7	2.40	36.61	10.04	694	7-10
44 T0 47								32.1	23.8	17.5	2.79	36.61	10.87	791	8-30
44 T0 48			76.4	76.4	74.9	73.7	68.3	44.5	33.0	24.3	2.79	36.61	11.26	1048	9-30

② type 46

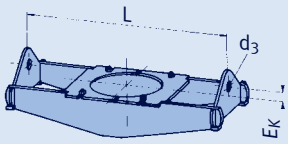

② type 48

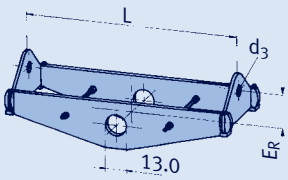

	permissible load [lbs x 1000]											L		type 46			type 48		load
type	210	480	660	840	930	950	985	1040	1075	1110°F	d_3	min	max	E_K	[lbs min]	[lbs max]	E_R	[lbs min]	[lbs max]	group
4.② T011	21.8	16.2	12.8								1.81	61.81	86.61	1.97	682	854	11.61	639	911	5-8
4. T0 12	30.1	22.7	18.0								2.00	61.81	86.61	2.36	837	1074	11.81	705	1093	6-9
4. T0 13	48.6	35.7	28.3								2.40	62.99	86.61	2.76	1109	1422	12.40	857	1207	7-10
4. T0 14	72.2	52.8	42.0								2.40	62.99	86.61	3.54	1478	1860	12.99	1083	1523	8-10
4. T0 15	103.0	78.9	62.7								2.79	62.99	86.61	3.94	2038	2405	12.99	1354	1910	9-30
4. T0 16	136.2	103.2	81.8								3.18	62.99	86.61	3.94	2521	2875	14.57	1506	2165	10-40
4. T0 21			19.3	18.2	13.5						1.81	70.87	102.36	3.15	742	1029	12.01	705	1258	5-8
4. T0 22			26.8	25.6	18.9						2.00	70.87	102.36	3.54	916	1240	13.58	794	1272	6-9
4. T0 23			46.8	40.7	31.7						2.40	70.87	102.36	3.94	1255	1675	14.76	1188	1622	7-10
4. T0 24			68.1	56.9	45.0						2.79	70.87	102.36	3.94	1638	2122	15.94	1306	1875	8-30
4. T0 25		98.0	96.0	80.9	64.1						2.79	70.87	102.36	4.33	2000	2663	17.72	1613	2325	9-30
4. T0 26	126.3	121.6	115.1	93.5	87.7						3.18	71.65	102.36	4.33	2393	3246	18.11	1832	2646	10-40
4. T0 31					20.5	20.2	15.7	9.0			1.81	74.80	106.30	3.94	1000	1361	12.99	826	1307	5-8
4. T0 32					31.7	31.5	24.5	13.5			1.81	74.80	106.30	4.33	1328	1766	13.58	1005	1509	5-8
4. T0 33					42.3	41.6	32.6	18.0			2.00	74.80	106.30	4.33	1533	2099	15.55	1204	1763	6-9
4. T0 34					87.2	80.7	62.0	33.0			2.40	74.80	106.30	5.12	2639	3481	16.93	2273	3019	7-10
4. T0 35	152.9	141.0	136.7	132.2	129.0	116.9	89.9	47.9			2.79	74.80	106.30	5.12	3404	4449	18.31	2238	3274	8-30
4. T0 36	152.9	152.9	152.9	152.9	152.0	137.4	105.7	56.2			2.79	74.80	106.30	6.30	3857	5044	19.09	2507	3642	9-30
4. T0 37	170.9	170.9	170.9	170.9	170.9	166.8	130.6	69.7			3.18	77.95	106.30	6.30	4223	5472	20.47	2964	4166	10-40
4. T0 41								16.0	11.9	9.0	1.81	74.80	106.30	3.94	1291	1760	11.81	921	1423	5-8
4. T0 42								24.1	18.0	13.5	1.81	74.80	106.30	4.33	1685	2235	13.58	1164	1772	5-8
4. T0 43								31.2	24.3	18.0	2.00	74.80	106.30	4.33	1977	2697	14.57	1348	2117	6-9
4. T0 44								56.9	42.5	31.2	2.40	74.80	106.30	5.12	2857	3888	17.52	1915	2924	7-10
4. T0 45							83.2	82.5	60.7	44.7	2.79	74.80	106.30	5.12	3721	5099	17.52	2363	3632	8-30
4. T0 46							97.3	95.3	71.9	54.0	2.79	74.80	106.30	6.30	4174	5686	19.29	2639	4165	9-30
4. T0 47						132.2	131.1	125.0	94.2	69.7	3.18	74.80	106.30	6.30	4971	6973	19.29	3161	4897	10-40

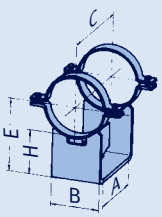

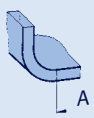

	permissible load [lbs x 1000]															weight
type	210	480	660	840	930	950	985	1040	1075	1110°F	E	A	B	C	H	[lbs]
49 T0 13	39.3	29.9	24.3								25.91	17.13	16.14	27.76	5.91	509
49 T0 14	67.2	49.7	40.2								27.87	17.52	18.50	28.15	7.87	553
49 T0 25	64.9	56.4	45.0	36.9	34.2						31.81	19.49	19.69	29.92	11.81	641
49 T0 35	93.1	80.5	69.2	57.3	54.0	53.3	51.9	36.6			31.81	19.49	21.26	29.92	11.81	685
49 T0 45	124.3	112.9	107.2	96.2	86.8	76.2	67.4	47.7	37.1	28.1	31.81	19.69	21.26	31.89	11.81	762

Selection table OD 42" [1067mm]

Temp. of medium >1110°F from page 4.52

Load doubling via type 77, see page 4.67

Pipe clamps, clamp bases, OD 42" [1067mm] (ND 1050/42"), type 42, 44, 46, 48, 49

	permissible load [lbs x 1000]														
type ①	210	480	660	840	930	950	985	1040	1075	1110°F	d_2	E	B	weight [lbs]	load group
42 T1 19	6.97	5.17	3.6								1.19	24.33	5.91	196	5-6

	permissible load [lbs x 1000]														
type	210	480	660	840	930	950	985	1040	1075	1110°F	d_3	E	B	weight [lbs]	load group
44 T1 14	20.7	16.4	13.7								2.00	32.87	6.38	229	6-9
44 T1 15	33.9	26.5	19.6								2.40	32.87	7.99	317	7-10
44 T1 16	46.8	38.7	28.1								2.79	34.45	8.74	430	8-30
44 T1 17	65.9	53.1	39.3								2.79	34.45	9.76	586	9-30
44 T1 18	83.9	66.8	48.1								3.18	34.84	10.87	744	10-40
44 T1 19	91.0	80.3	58.0								3.58	37.01	10.87	835	20-50
44 T1 24			19.6	15.5	14.2						2.00	36.02	7.17	284	7-9
44 T1 25			27.7	23.4	21.8						2.79	36.02	7.44	346	8-30
44 T1 26			38.7	30.8	28.1						2.79	36.02	8.27	458	8-30
44 T1 27			56.7	44.5	40.5						2.79	36.02	8.58	586	9-30
44 T1 28			67.4	54.2	50.1						3.18	36.81	10.87	753	10-40
44 T1 29	85.4	85.4	78.0	62.9	58.0						3.18	36.81	11.14	863	10-40
44 T1 35					22.3	22.0	18.9	11.7			2.40	37.60	8.27	474	7-10
44 T1 36					32.8	32.4	31.2	18.7			2.79	37.60	8.86	632	8-30
44 T1 37					42.3	41.6	38.2	20.5			2.79	37.60	10.63	718	8-30
44 T1 38					44.7	44.3	42.9	23.8			2.79	37.60	10.87	830	9-30
44 T1 39					54.4	53.7	52.4	35.3			2.79	37.60	11.26	1104	9-30
44 T1 46								24.1	18.7	13.7	2.40	37.60	10.87	729	7-10
44 T1 47								32.1	23.8	17.8	2.79	37.60	10.87	828	8-30
44 T1 48			76.4	76.4	75.1	74	68.3	44.7	32.8	24.3	2.79	37.60	11.26	1099	9-30

	permissible load [lbs x 1000]										L			type 46			type 48			
type	210	480	660	840	930	950	985	1040	1075	1110°F	d_3	min	max	E_K	[lbs min]	[lbs max]	E_R	[lbs min]	[lbs max]	load group
4.② T1 11	21.8	16.2	12.8								1.81	59.06	88.58	1.97	718	932	11.61	627	932	5-8
4. T1 12	30.1	22.9	18.2								2.00	64.57	88.58	2.36	910	1135	11.81	774	1159	6-9
4. T1 13	47.9	35.7	28.3								2.40	64.96	88.58	2.76	1199	1529	12.40	955	1315	7-10
4. T1 14	71.3	52.6	41.8								2.40	64.96	88.58	3.54	1579	1954	12.99	1133	1596	8-10
4. T1 15	104.3	79.4	62.9								2.79	64.96	88.58	3.94	2168	2529	12.99	1419	1980	9-30
4. T1 16	133.8	103.0	81.8								3.18	64.96	88.58	3.94	2679	3021	14.57	1584	2245	10-40
4. T1 21			18.9	18.2	13.5						1.81	72.83	104.33	3.15	786	1072	12.01	736	1288	5-8
4. T1 22			26.5	25.6	18.9						2.00	72.83	104.33	3.54	969	1302	13.58	816	1302	6-9
4. T1 23			46.8	40.9	31.5						2.40	72.83	104.33	3.94	1337	1761	14.76	1249	1662	7-10
4. T1 24			66.3	57.6	45.0						2.79	72.83	104.33	3.94	1741	2214	15.94	1378	1931	8-30
4. T1 25		97.8	94.9	81.8	64.3						2.79	72.83	104.33	4.33	2113	2780	17.72	1681	2406	9-30
4. T1 26	133.5	122.3	114.2	92.8	87.7						3.18	73.62	104.33	4.33	2537	3369	18.11	1913	2857	10-40
4. T1 31					20.9	20.2	15.7	9.0			1.81	76.77	108.27	3.94	1064	1429	12.99	848	1338	5-8
4. T1 32					31.7	31.5	24.5	13.5			1.81	76.77	108.27	4.33	1410	1852	13.58	1046	1551	5-8
4. T1 33					42.3	41.6	32.6	18.0			2.00	76.77	108.27	4.33	1628	2188	15.55	1253	1820	6-9
4. T1 34					87.2	80.7	62.3	33.0			2.40	76.77	108.27	5.12	2785	3620	16.93	2322	3049	7-10
4. T1 35	152.9	141.0	136.7	132.2	129.0	116.9	89.9	47.9			2.79	76.77	108.27	5.12	3609	4635	18.31	2336	3412	8-30
4. T1 36	152.9	152.9	152.9	152.9	152.0	138.0	106.3	56.2			2.79	76.77	108.27	6.30	4067	5261	19.09	2694	3759	9-30
4. T1 37	170.9	170.9	170.9	170.9	170.9	166.6	130.4	69.7			3.18	76.77	108.27	6.30	4370	5697	20.47	2997	4301	10-40
4. T1 41								16.0	12.1	9.0	1.81	76.77	108.27	3.94	1377	1842	11.81	979	1470	5-8
4. T1 42								24.1	18.2	13.5	1.81	76.77	108.27	4.33	1791	2338	13.58	1216	1826	5-8
4. T1 43								33.0	24.3	18.0	2.00	76.77	108.27	4.33	2094	2828	14.57	1448	2182	6-9
4. T1 44								56.9	42.5	31.5	2.40	76.77	108.27	5.12	3025	4063	17.52	1999	3019	7-10
4. T1 45							80.5	80.0	60.7	45.0	2.79	76.77	108.27	5.12	3918	5328	17.52	2473	3894	8-30
4. T1 46							107.7	96.9	72.8	54.0	2.79	76.77	108.27	6.30	4411	5929	19.29	2890	4306	9-30
4. T1 47						130.8	130.4	128.1	94.2	69.7	3.18	76.77	108.27	6.30	5234	7247	19.29	3289	5050	10-40

	permissible load [lbs x 1000]															
type	210	480	660	840	930	950	985	1040	1075	1110°F	E	A	B	C	H	weight [lbs]
49 T1 13	38.7	30.1	24.5								26.93	17.13	17.32	27.76	5.91	535
49 T1 14	67.7	49.9	40.5								28.90	17.52	19.69	28.15	7.87	579
49 T1 25	65.1	56.4	45.0	37.3	34.6						32.83	19.49	20.87	29.92	11.81	670
49 T1 35	93.1	80.5	69.2	57.3	54.0	53.3	51.9	36.6			32.83	19.49	22.44	29.92	11.81	714
49 T1 45	123.6	112.0	106.3	95.5	87.0	76.9	67.9	48.1	37.1	28.1	32.83	19.69	22.44	31.89	11.81	795

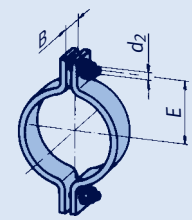

① Heat-resistant materials, see pages 0.9 and 4.4

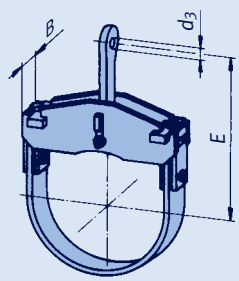

② type 46

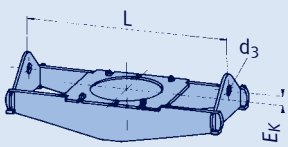

② type 48

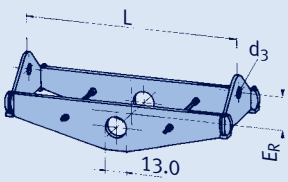

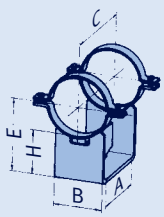

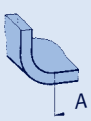

Selection table OD 44" [1118mm]

Temp. of medium >1110°F from page 4.52

Load doubling via type 77, see page 4.67

Pipe clamps, clamp bases, OD 44" [1118mm] (ND 1100/44"), type 42, 44, 46, 48, 49

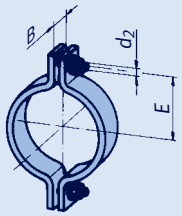

① Heat-resistant materials, see pages 0.9 and 4.4

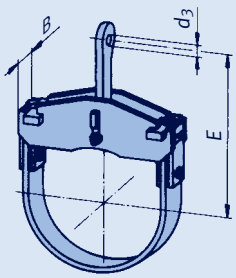

② type 46

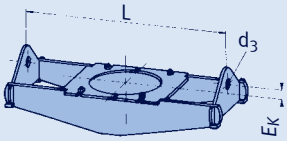

② type 48

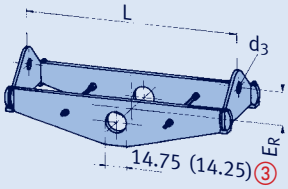

③ For trunnion hole diameter 14.25 inch change last digit of type designation to a letter according to the following table. The weights may vary slightly.

change last digit from	to
48 T2 .1	48 T2 .A
48 T2 .2	48 T2 .B
48 T2 .3	48 T2 .C
48 T2 .4	48 T2 .D
48 T2 .5	48 T2 .E
48 T2 .6	48 T2 .F
48 T2 .7	48 T2 .G

e.g. 48 T2 25 => 48 T2 2E

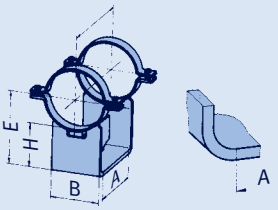

type ①	permissible load [lbs x 1000] 210	480	660	840	930	950	985	1040	1075	1110°F	d_2	E	B	weight [lbs]	load group
42 T2 19	6.97	5.17	3.6								1.19	25.35	5.91	205	5-6

type	permissible load [lbs x 1000] 210	480	660	840	930	950	985	1040	1075	1110°F	d_3	E	B	weight [lbs]	load group
44 T2 14	20.7	16.6	13.3								2.00	33.86	6.38	240	6-9
44 T2 15	33.9	25.4	19.6								2.40	33.86	7.99	333	7-10
44 T2 16	46.5	36.9	28.1								2.79	35.43	8.74	441	8-30
44 T2 17	66.1	52.2	39.1								2.79	35.43	9.76	610	9-30
44 T2 18	83.0	66.5	48.1								3.18	36.02	10.87	762	10-40
44 T2 19	91.0	80.5	58.2								3.58	37.99	10.87	874	20-50
44 T2 24			19.8	15.5	14.2						2.00	37.01	7.17	291	7-9
44 T2 25			27.7	23.4	22.0						2.79	37.01	7.44	355	8-30
44 T2 26			38.7	30.8	28.1						2.79	37.01	8.27	469	8-30
44 T2 27			56.0	43.8	40.7						2.79	37.01	8.58	599	9-30
44 T2 28			67.7	54.2	50.1						3.18	37.80	10.87	769	10-40
44 T2 29	85.4	85.4	78.2	62.9	58.2						3.18	37.80	11.14	883	10-40
44 T2 35					22.5	22.0	18.9	11.7			2.40	38.58	8.27	485	7-10
44 T2 36					32.8	32.4	31.2	18.7			2.79	38.58	8.86	648	8-30
44 T2 37					42.3	41.6	38.2	20.5			2.79	38.58	10.63	731	8-30
44 T2 38					45.0	44.3	43.4	23.8			2.79	38.58	10.87	846	9-30
44 T2 39					54.4	53.7	52.4	35.3			2.79	38.58	11.26	1126	9-30
44 T2 46								24.1	18.7	13.7	2.40	38.58	10.87	744	7-10
44 T2 47								32.1	23.8	17.8	2.79	38.58	10.87	844	8-30
44 T2 48			76.4	76.4	75.1	74.0	68.6	44.7	33.0	24.5	2.79	38.58	11.26	1121	9-30

type	permissible load [lbs x 1000] 210	480	660	840	930	950	985	1040	1075	1110°F	d_3	L min	L max	type 46 E_K	type 46 [lbs min]	type 46 [lbs max]	type 48 E_R	type 48 [lbs min]	type 48 [lbs max]	load group
4.② T2 11	21.8	16.2	12.8								1.81	61.42	90.55	1.97	764	993	11.61	784	1063	5-8
4. T2 12	30.6	22.7	18.0								2.00	61.81	90.55	2.36	962	1198	11.81	832	1316	6-9
4. T2 13	47.9	35.7	28.3								2.40	65.75	90.55	2.76	1301	1628	12.40	1117	1441	7-10
4. T2 14	71.9	52.8	42.0								2.40	65.75	90.55	3.54	1668	2058	12.99	1212	1750	8-10
4. T2 15	105.9	79.6	62.9								2.79	66.54	90.55	3.94	2308	2698	12.99	1525	2210	9-30
4. T2 16	134.4	103.2	81.8								3.18	66.54	90.55	3.94	2870	3171	14.57	1810	2513	10-40
4. T2 21			20.2	18.2	13.5						1.81	74.80	106.30	3.15	837	1126	12.01	915	1463	5-8
4. T2 22			26.8	26.1	19.1						2.00	74.80	106.30	3.54	1026	1366	13.58	930	1477	6-9
4. T2 23			46.8	40.0	31.9						2.40	74.80	106.30	3.94	1423	1845	14.76	1277	1833	7-10
4. T2 24			67.4	56.7	45.0						2.79	74.80	106.30	3.94	1802	2275	15.94	1405	2126	8-30
4. T2 25		97.8	96.4	82.3	64.1						2.79	74.80	106.30	4.33	2238	2907	17.72	1749	2573	9-30
4. T2 26	121.2	117.8	114.2	94.2	87.7						3.18	77.56	106.30	4.33	2817	3521	18.11	2020	2910	10-40
4. T2 31					20.7	20.2	15.7	9.0			1.81	78.74	110.24	3.94	1094	1496	12.99	961	1518	5-8
4. T2 32					31.7	31.5	24.5	13.5			1.81	78.74	110.24	4.33	1471	1937	13.58	1191	1669	5-8
4. T2 33					41.8	41.6	32.4	18.0			2.00	78.74	110.24	4.33	1727	2294	15.55	1306	1903	6-9
4. T2 34					87.5	80.9	62.3	32.8			2.40	78.74	110.24	5.12	2934	3777	16.93	2295	3308	7-10
4. T2 35	152.9	141.4	137.1	132.6	129.5	116.5	89.7	47.9			2.79	79.92	110.24	5.12	3812	4879	18.31	2504	3575	8-30
4. T2 36	152.9	152.9	152.9	152.9	151.3	137.6	105.9	56.2			2.79	79.92	110.24	6.30	4496	5459	19.09	2766	3950	9-30
4. T2 37	170.9	170.9	170.9	170.9	170.9	166.6	130.4	69.7			3.18	79.92	110.24	6.30	4639	5928	20.47	3060	4524	10-40
4. T2 41								16.2	12.1	9.0	1.81	78.74	110.24	3.94	1457	1932	11.81	1201	1617	5-8
4. T2 42								24.1	18.0	13.5	1.81	78.74	110.24	4.33	1890	2448	13.58	1309	1942	5-8
4. T2 43								32.8	24.3	18.0	2.00	78.74	110.24	4.33	2222	2951	14.57	1551	2321	6-9
4. T2 44								57.8	42.5	31.5	2.40	78.74	110.24	5.12	3189	4226	17.52	2124	3194	7-10
4. T2 45							91.3	82.5	60.9	45.0	2.79	78.74	110.24	5.12	4145	5576	17.52	2752	4098	8-30
4. T2 46							107.9	96.7	72.8	54.0	2.79	78.74	110.24	6.30	4656	6191	19.29	3067	4546	9-30
4. T2 47						132.4	131.3	127.9	94.2	69.7	3.18	78.74	110.24	6.30	5519	7543	19.29	3568	5290	10-40

type	permissible load [lbs x 1000] 210	480	660	840	930	950	985	1040	1075	1110°F	E	A	B	C	H	weight [lbs]
49 T2 13	39.1	30.3	24.7								27.91	17.13	17.72	27.56	5.91	553
49 T2 14	68.6	50.1	40.7								29.88	17.52	20.08	28.15	7.87	599
49 T2 25	65.6	57.1	45.9	37.5	34.8						33.82	19.49	21.65	29.92	11.81	694
49 T2 35	93.1	80.5	69.2	57.3	54.0	53.3	51.9	36.6			33.82	19.49	23.23	29.92	11.81	738
49 T2 45	123.8	112.4	106.8	96.0	87.5	77.1	68.3	48.1	37.3	28.3	33.82	19.69	23.23	31.89	11.81	822

Selection table OD 46" [1168mm]

Temp. of medium >1110°F from page 4.52

Load doubling via type 77, see page 4.67

Pipe clamps, clamp bases, OD 46" [1168mm] (ND 1150/46"), type 42, 44, 46, 48, 49

	permissible load [lbs x 1000]													weight	load
type ①	210	480	660	840	930	950	985	1040	1075	1110°F	d_2	E	B	[lbs]	group
42 T3 19	6.97	5.17	3.6								1.19	26.38	5.91	214	5-6

	permissible load [lbs x 1000]													weight	load
type	210	480	660	840	930	950	985	1040	1075	1110°F	d_3	E	B	[lbs]	group
44 T3 14	21.4	16.9	14.2								2.00	34.84	6.38	249	6-9
44 T3 15	34.2	26.1	19.6								2.40	34.84	7.99	344	7-10
44 T3 16	46.8	37.8	28.1								2.79	36.42	8.74	465	8-30
44 T3 17	67.9	54.0	39.1								2.79	36.42	9.76	634	9-30
44 T3 18	80.9	65.2	47.2								3.18	38.78	10.87	811	10-40
44 T3 19	91.0	80.3	58.0								3.58	39.37	10.87	912	20-50
44 T3 24			19.6	15.3	14.2						2.00	37.99	7.17	304	7-9
44 T3 25			27.9	23.4	22.0						2.79	37.99	7.44	372	8-30
44 T3 26			38.9	30.8	28.1						2.79	37.99	8.27	491	8-30
44 T3 27			56.4	44.7	40.9						2.79	37.99	8.86	676	9-30
44 T3 28			67.9	53.3	49.7						3.18	38.78	10.87	804	10-40
44 T3 29	85.4	85.4	77.8	61.6	57.6						3.18	38.78	11.14	923	10-40
44 T3 35					22.5	22.0	18.9	11.7			2.40	39.57	8.27	509	7-10
44 T3 36					32.8	32.4	31.5	18.7			2.79	39.57	8.86	678	8-30
44 T3 37					42.3	41.6	38.2	20.5			2.79	39.57	10.63	767	8-30
44 T3 38					45.0	44.3	43.2	23.8			2.79	39.57	10.87	888	9-30
44 T3 39					51.9	51.9	50.6	35.1			2.79	40.16	11.26	1187	9-30
44 T3 46								24.1	18.7	13.7	2.40	39.57	10.87	780	7-10
44 T3 47								32.4	23.8	17.8	2.79	39.57	10.87	885	8-30
44 T3 48			76.4	76.4	75.1	74.0	67.7	44.5	33.3	24.5	2.79	39.57	11.73	1172	9-30

	permissible load [lbs x 1000]											L			type 46			type 48		load
type	210	480	660	840	930	950	985	1040	1075	1110°F	d_3	min	max	E_K	[lbs min]	[lbs max]	E_R	[lbs min]	[lbs max]	group
4.② T3 11	21.4	16.2	12.8								1.81	64.17	92.52	1.97	828	1063	11.61	819	1091	5-8
4. T3 12	30.3	22.7	18.0								2.00	64.96	92.52	2.36	1034	1259	11.81	916	1395	6-9
4. T3 13	47.9	35.7	28.3								2.40	67.72	92.52	2.76	1396	1763	12.40	1155	1507	7-10
4. T3 14	71.5	52.6	41.8								2.40	67.72	92.52	3.54	1761	2171	12.99	1264	1780	8-10
4. T3 15	105.9	79.8	63.4								2.79	68.90	92.52	3.94	2546	2832	12.99	1635	2302	9-30
4. T3 16	133.1	103.4	82.1								3.18	68.90	92.52	3.94	3007	3337	14.57	1889	2610	10-40
4. T3 21			19.6	18.0	13.5						1.81	76.77	108.27	3.15	892	1178	12.01	943	1496	5-8
4. T3 22			27.9	26.1	19.1						2.00	76.77	108.27	3.54	1089	1441	13.58	999	1557	6-9
4. T3 23			47.0	40.2	32.1						2.40	76.77	108.27	3.94	1501	1941	14.76	1316	1874	7-10
4. T3 24			67.7	56.7	45.2						2.79	76.77	108.27	3.94	1910	2376	15.94	1484	2215	8-30
4. T3 25		97.6	94.9	82.3	64.1						2.79	76.77	108.27	4.33	2431	3019	17.72	1811	2645	9-30
4. T3 26	130.4	119.4	115.6	94.6	87.7						3.18	81.10	108.27	4.33	2984	3703	18.11	2123	3000	10-40
4. T3 31					20.9	20.2	15.7	9.0			1.81	80.71	112.20	3.94	1202	1563	12.99	989	1551	5-8
4. T3 32					31.7	31.2	24.1	13.5			1.81	80.71	112.20	4.33	1575	2024	13.58	1298	1714	5-8
4. T3 33					41.4	41.1	32.6	18.0			2.00	80.71	112.20	4.33	1830	2398	15.55	1356	2031	6-9
4. T3 34				89.5	88.6	80.3	61.8	33.0			2.40	80.71	112.20	5.12	3217	3947	16.93	2419	3421	7-10
4. T3 35	149.5	138.7	135.3	132.4	129.5	117.4	90.4	47.9			2.79	80.71	112.20	5.12	4005	5078	18.31	2598	3688	8-30
4. T3 36	152.9	152.9	152.9	152.9	151.3	136.7	105.2	56.2			2.79	82.68	112.20	6.30	4689	5687	19.09	2899	4098	9-30
4. T3 37	170.9	170.9	170.9	170.9	170.6	166.8	130.4	69.7			3.18	82.68	112.20	6.30	4895	6178	20.47	3203	4677	10-40
4. T3 41								16.0	12.1	9.0	1.81	80.71	112.20	3.94	1549	2024	11.81	1236	1667	5-8
4. T3 42								23.8	18.0	13.5	1.81	80.71	112.20	4.33	2007	2556	13.58	1358	2006	5-8
4. T3 43								33.0	24.3	18.0	2.00	80.71	112.20	4.33	2347	3072	14.57	1623	2388	6-9
4. T3 44								58.0	42.5	31.5	2.40	80.71	112.20	5.12	3385	4416	17.52	2212	3294	7-10
4. T3 45							92.2	82.5	60.9	45.0	2.79	80.71	112.20	5.12	4367	5802	17.52	2863	4202	8-30
4. T3 46							107.9	95.3	71.7	54.0	2.79	83.46	112.20	6.30	4967	6432	19.29	3267	4679	9-30
4. T3 47						132.2	131.1	128.4	94.4	69.5	3.18	83.46	112.20	6.30	5910	7846	19.29	3799	5448	10-40

	permissible load [lbs x 1000]															weight
type	210	480	660	840	930	950	985	1040	1075	1110°F	E	A	B	C	H	[lbs]
49 T3 13	39.1	30.8	25.0								28.90	17.13	18.50	27.56	5.91	575
49 T3 14	69.2	50.6	41.1								30.87	17.52	21.26	28.15	7.87	626
49 T3 25	66.0	57.3	45.9	37.5	35.1						34.80	19.49	22.83	29.92	11.81	722
49 T3 35	91.9	80.5	69.2	57.3	54.0	53.3	51.9	36.6			34.80	19.49	24.41	29.92	11.81	767
49 T3 45	123.4	111.7	106.1	95.5	89.0	80.7	78.0	54.0	40.5	29.7	34.80	19.69	24.41	31.89	11.81	855

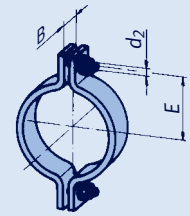

① Heat-resistant materials, see pages 0.9 and 4.4

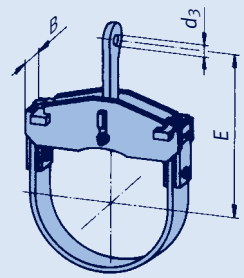

② type 46

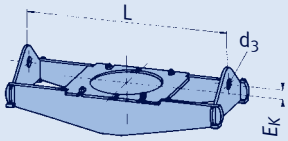

② type 48

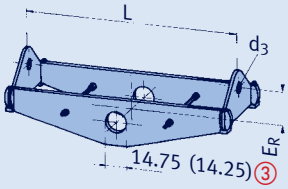

③ For trunnion hole diameter 14.25 inch change last digit of type designation to a letter according to the following table. The weights may vary slightly.

change last digit from	to
48 T3 .1	48 T3 .A
48 T3 .2	48 T3 .B
48 T3 .3	48 T3 .C
48 T3 .4	48 T3 .D
48 T3 .5	48 T3 .E
48 T3 .6	48 T3 .F
48 T3 .7	48 T3 .G

e.g. 48 T3 47 => 48 T3 4G

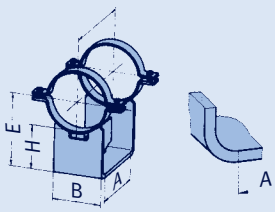

Selection table OD 48" [1219mm]

Temp. of medium >1110°F from page 4.52

Load doubling via type 77, see page 4.67

Pipe clamps, clamp bases, OD 48" [1219mm] (ND 1200/48"), type 42, 44, 46, 48, 49

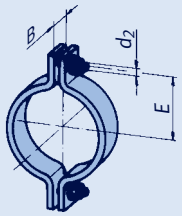

① Heat-resistant materials, see pages 0.9 and 4.4

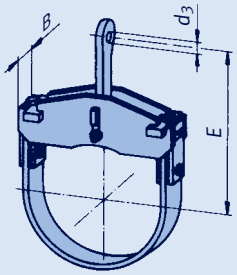

② type 46

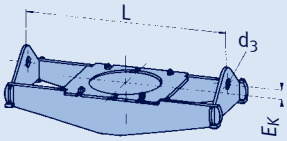

② type 48

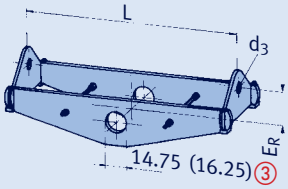

③ For trunnion hole diameter 16.25 inch change last digit of type designation to a letter according to the following table. The weights may vary slightly.

change last digit

from	to
48 T4 .1	48 T4 .A
48 T4 .2	48 T4 .B
48 T4 .3	48 T4 .C
48 T4 .4	48 T4 .D
48 T4 .5	48 T4 .E
48 T4 .6	48 T4 .F
48 T4 .7	48 T4 .G

e.g. 48 T4 33 => 48 T4 3C

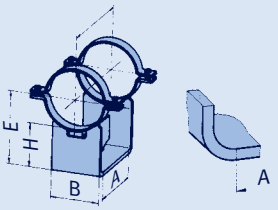

type ①	permissible load [lbs x 1000] 210	480	660	840	930	950	985	1040	1075	1110°F	d_2	E	B	weight [lbs]	load group
42 T4 19	6.97	5.17	3.6								1.19	27.32	5.91	220	5-6

type	permissible load [lbs x 1000] 210	480	660	840	930	950	985	1040	1075	1110°F	d_3	E	B	weight [lbs]	load group
44 T4 14	21.4	17.1	13.5								2.00	35.83	6.38	262	6-9
44 T4 15	34.2	27.2	19.6								2.40	35.83	7.99	368	7-10
44 T4 16	46.8	37.3	28.1								2.79	37.40	8.74	478	8-30
44 T4 17	67.7	52.8	39.1								2.79	37.40	9.76	663	9-30
44 T4 18	81.2	65.2	47.2								3.18	39.76	10.87	828	10-40
44 T4 19	91.0	80.7	58.5								3.58	40.55	10.87	934	20-50
44 T4 24			20.2	15.7	14.4						2.00	38.98	7.17	315	7-9
44 T4 25			27.9	22.9	21.4						2.79	38.98	7.44	379	8-30
44 T4 26			38.2	30.1	28.1						2.79	38.98	8.27	502	8-30
44 T4 27			56.2	44.3	40.9						2.79	38.98	8.86	689	9-30
44 T4 28			67.7	53.7	49.7						3.18	39.76	11.14	870	10-40
44 T4 29	85.4	85.4	78.0	62.3	57.6						3.18	40.16	11.14	952	10-40
44 T4 35					22.5	22.0	19.1	11.7			2.40	40.55	8.27	520	7-10
44 T4 36					33.9	33.5	31.5	18.7			2.79	40.55	8.86	700	8-30
44 T4 37					42.3	41.6	38.2	20.7			2.79	40.55	10.63	782	8-30
44 T4 38					45.0	44.3	43.2	23.8			2.79	40.55	10.87	903	9-30
44 T4 39					52.6	51.9	51.0	35.3			2.79	41.14	11.26	1209	9-30
44 T4 46								24.1	18.7	13.7	2.40	40.55	10.87	793	7-10
44 T4 47								32.4	23.8	17.8	2.79	40.55	10.87	901	8-30
44 T4 48			76.4	76.4	75.1	74.2	68.1	45.0	33.3	24.7	2.79	40.55	11.73	1198	9-30

type	permissible load [lbs x 1000] 210	480	660	840	930	950	985	1040	1075	1110°F	d_3	L min	L max	E_K	type 46 [lbs min]	type 46 [lbs max]	E_R	type 48 [lbs min]	type 48 [lbs max]	load group
4.② T4 11	21.8	16.2	12.8								1.81	70.08	94.49	1.97	907	1092	11.61	929	1157	5-8
4. T4 12	30.1	22.7	18.0								2.00	70.08	94.49	2.36	1137	1333	11.81	978	1430	6-9
4. T4 13	47.9	35.7	28.3								2.40	70.08	94.49	2.76	1506	1833	12.40	1198	1609	7-10
4. T4 14	71.9	52.8	41.8								2.40	70.87	94.49	3.54	1972	2287	12.99	1383	1895	8-10
4. T4 15	108.1	79.6	63.2								2.79	70.87	94.49	3.94	2668	2993	12.99	1863	2523	9-30
4. T4 16	133.1	103.2	81.8								3.18	70.87	94.49	3.94	3157	3508	14.57	1972	2699	10-40
4. T4 21			20.2	18.0	13.5						1.81	78.74	110.24	3.15	946	1244	12.01	971	1528	5-8
4. T4 22			27.4	26.1	19.1						2.00	78.74	110.24	3.54	1165	1509	13.58	1039	1592	6-9
4. T4 23			46.8	40.2	31.7						2.40	78.74	110.24	3.94	1611	2045	14.76	1356	1969	7-10
4. T4 24			66.8	56.7	45.0						2.79	78.74	110.24	3.94	2016	2490	15.94	1659	2306	8-30
4. T4 25		97.8	96.0	82.5	64.1						2.79	79.92	110.24	4.33	2585	3153	17.72	1899	2731	9-30
4. T4 26	130.4	121.4	113.5	92.2	87.7						3.18	83.46	110.24	4.33	3142	3863	18.11	2215	3093	10-40
4. T4 31					20.7	20.2	15.7	9.0			1.81	82.68	114.17	3.94	1269	1628	12.99	1018	1584	5-8
4. T4 32					31.7	31.5	24.5	13.5			1.81	82.68	114.17	4.33	1643	2119	13.58	1335	1767	5-8
4. T4 33					42.5	41.6	32.4	18.0			2.00	82.68	114.17	4.33	1935	2505	15.55	1461	2106	6-9
4. T4 34				89.0	88.1	80.9	62.3	32.8			2.40	82.68	114.17	5.12	3344	4121	16.93	2558	3559	7-10
4. T4 35	147.5	136.9	133.5	130.6	129.0	117.4	90.4	47.9			2.79	85.43	114.17	5.12	4241	5280	18.31	2719	3802	8-30
4. T4 36	152.9	152.9	152.9	152.9	151.7	137.8	106.1	56.2			2.79	85.83	114.17	6.30	4985	5932	19.09	3045	4203	9-30
4. T4 37	170.9	170.9	170.9	170.6	168.8	166.6	130.4	69.7			3.18	85.83	114.17	6.30	5093	6426	20.47	3359	4819	10-40
4. T4 41								16.0	12.1	9.0	1.81	82.68	114.17	3.94	1634	2119	11.81	1270	1710	5-8
4. T4 42								23.6	18.0	13.5	1.81	82.68	114.17	4.33	2124	2669	13.58	1407	2118	5-8
4. T4 43								32.8	24.3	18.0	2.00	82.68	114.17	4.33	2490	3216	14.57	1683	2457	6-9
4. T4 44								55.5	42.5	31.5	2.40	82.68	114.17	5.12	3575	4611	17.52	2301	3452	7-10
4. T4 45							91.0	81.2	60.7	45.0	2.79	82.68	114.17	5.12	4596	6033	17.52	2977	4314	8-30
4. T4 46							106.3	95.8	72.2	54.0	2.79	87.80	114.17	6.30	5277	6683	19.29	3469	4814	9-30
4. T4 47							127.7	127.0	94.4	69.7	3.18	87.80	114.17	6.30	6259	8172	19.29	4022	5607	10-40

type	permissible load [lbs x 1000] 210	480	660	840	930	950	985	1040	1075	1110°F	E	A	B	C	H	weight [lbs]
49 T4 13	39.3	30.8	25.2								29.92	17.13	19.29	27.56	5.91	597
49 T4 14	69.2	51.0	41.6								31.89	17.52	22.05	28.15	7.87	648
49 T4 25	66.0	57.6	46.3	38.0	35.3						35.83	19.49	24.02	29.92	11.81	751
49 T4 35	108.5	94.9	81.6	67.0	62.9	62.3	60.7	43.2			35.83	19.49	25.59	29.92	11.81	808
49 T4 45	129.3	111.1	105.7	94.9	88.3	80.9	78.2	54.0	40.5	29.7	35.83	19.69	25.59	31.89	11.81	885

Selection table OD 0.83" - 1.67"
Temperatures 1110-1200°F

Pipe clamps, clamp bases, OD 0.82" [21.3mm] (ND 15/1/2"), type 45, 49

	permissible load [lbs x 1000]											
type	1110	1130	1148	1166	1184	1200°F	d_1	E	B	L	weight [lbs]	load group
45 01 51	0.79	0.70	0.61	0.52	0.45	0.38	0.48	0.98	2.76	11.81	8.6	C-4
45 01 51	0.58	0.49	0.43	0.38	0.34	0.27	0.48	0.98	2.76	15.75	11.0	C-4
45 01 51	0.45	0.40	0.34	0.29	0.25	0.22	0.48	0.98	2.76	19.69	13.0	C-4
45 01 51	0.38	0.34	0.29	0.25	0.20	0.18	0.48	0.98	2.76	23.62	16.0	C-4

	permissible load [lbs x 1000]											
type	1110	1130	1148	1166	1184	1200°F	E	A	B	C	H	weight [lbs]
49 01 55	0.99	0.9	0.81	0.72	0.63	0.56	8.31	9.84	5.51	12.99	7.87	12.3

Pipe clamps, clamp bases, OD 1.06" [26.9mm] (ND 20/3/4"), type 45, 49

	permissible load [lbs x 1000]											
type	1110	1130	1148	1166	1184	1200°F	d_1	E	B	L	weight [lbs]	load group
45 02 51	0.81	0.72	0.61	0.54	0.47	0.40	0.48	0.98	2.76	11.81	8.6	C-4
45 02 51	0.58	0.52	0.45	0.38	0.34	0.29	0.48	0.98	2.76	15.75	11.0	C-4
45 02 51	0.45	0.40	0.36	0.29	0.27	0.22	0.48	0.98	2.76	19.69	13.0	C-4
45 02 51	0.38	0.34	0.29	0.25	0.22	0.18	0.48	0.98	2.76	23.62	16.0	C-4

	permissible load [lbs x 1000]											
type	1110	1130	1148	1166	1184	1200°F	E	A	B	C	H	weight [lbs]
49 02 55	1.01	0.9	0.81	0.72	0.63	0.56	8.39	9.84	5.51	12.99	7.87	13

type 43

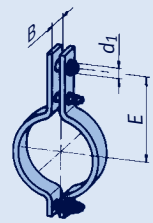

Pipe clamps, clamp bases, OD 1.33" [33.7mm] (ND 25/1"), type 43, 45, 49

	permissible load [lbs x 1000]										
type	1110	1130	1148	1166	1184	1200°F	d_1	E	B	weight [lbs]	load group
43 03 59	0.99	0.88	0.76	0.67	0.61	0.52	0.48	9.25	1.97	3.1	C-2

	permissible load [lbs x 1000]											
type	1110	1130	1148	1166	1184	1200°F	d_1	E	B	L	weight [lbs]	load group
45 03 51	0.83	0.74	0.63	0.56	0.47	0.40	0.48	0.98	2.76	11.81	8.6	C-4
45 03 52	2.09	2.09	2.07	1.80	1.55	1.35	0.48	0.98	3.94	11.81	18.0	C-4
45 03 51	0.61	0.54	0.45	0.40	0.34	0.29	0.48	0.98	2.76	15.75	11.0	C-4
45 03 52	1.98	1.73	1.51	1.33	1.15	0.99	0.48	0.98	3.94	15.75	23.0	C-4
45 03 51	0.47	0.40	0.36	0.31	0.27	0.22	0.48	0.98	2.76	19.69	13.0	C-4
45 03 52	1.55	1.35	1.19	1.03	0.90	0.76	0.48	0.98	3.94	19.69	28.0	C-4
45 03 51	0.38	0.34	0.29	0.25	0.22	0.18	0.48	0.98	2.76	23.62	16.0	C-4
45 03 52	1.26	1.12	0.97	0.83	0.72	0.63	0.48	0.98	3.94	23.62	33.0	C-4

	permissible load [lbs x 1000]											
type	1110	1130	1148	1166	1184	1200°F	E	A	B	C	H	weight [lbs]
49 03 55	1.06	0.94	0.85	0.74	0.65	0.58	8.54	9.84	5.51	12.99	7.87	13

type 45

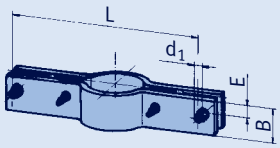

Pipe clamps, clamp bases, OD 1.67" [42.4mm] (ND 32/1 1/4"), type 43, 45, 49

	permissible load [lbs x 1000]										
type	1110	1130	1148	1166	1184	1200°F	d_1	E	B	weight [lbs]	load group
43 04 59	0.99	0.88	0.76	0.67	0.61	0.52	0.48	9.45	1.97	3.10	C-2

	permissible load [lbs x 1000]											
type	1110	1130	1148	1166	1184	1200°F	d_1	E	B	L	weight [lbs]	load group
45 04 51	1.64	1.44	1.24	1.08	0.94	0.79	0.48	0.98	2.76	13.78	15	C-4
45 04 52	4.05	3.60	3.15	2.70	2.25	2.07	0.63	1.18	3.94	13.78	28	1-4
45 04 51	1.24	1.08	0.94	0.81	0.72	0.61	0.48	0.98	2.76	17.72	18	C-4
45 04 52	3.15	2.70	2.25	2.09	1.82	1.55	0.63	1.18	3.94	17.72	35	1-4
45 04 51	0.99	0.88	0.76	0.65	0.56	0.49	0.48	0.98	2.76	21.65	22	C-4
45 04 52	2.47	2.23	1.93	1.69	1.46	1.26	0.63	1.18	3.94	21.65	42	1-4
45 04 51	0.83	0.72	0.63	0.54	0.47	0.40	0.48	0.98	2.76	25.59	25	C-4
45 04 52	2.11	1.87	1.62	1.42	1.21	1.06	0.63	1.18	3.94	25.59	49	1-4

	permissible load [lbs x 1000]											
type	1110	1130	1148	1166	1184	1200°F	E	A	B	C	H	weight [lbs]
49 04 55	1.17	1.06	0.92	0.83	0.72	0.65	8.70	9.84	5.51	12.99	7.87	13

type 49

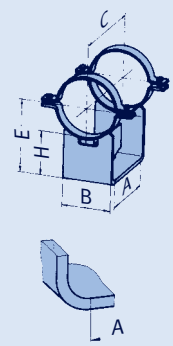

Selection table OD 1.90" - 2.87"
Temperatures 1110-1200°F

type 43

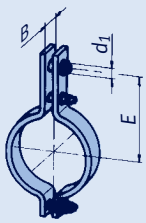

type 45

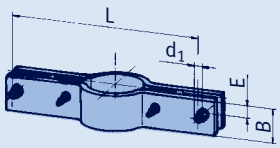

type 48

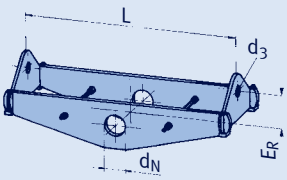

type 49

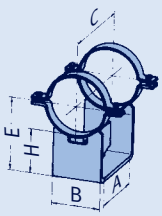

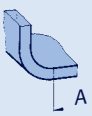

Pipe clamps, clamp bases, OD 1.90" [48.3mm] (ND 40/1 1/2"), type 43, 45, 49

	permissible load [lbs x 1000]									weight	load
type	1110	1130	1148	1166	1184	1200°F	d_1	E	B	[lbs]	group
43 05 59	0.99	0.88	0.76	0.67	0.61	0.52	0.48	9.45	1.97	3.1	C-2

	permissible load [lbs x 1000]										weight	load
type	1110	1130	1148	1166	1184	1200°F	d_1	E	B	L	[lbs]	group
45 05 51	1.93	1.69	1.48	1.28	1.12	0.94	0.48	0.98	3.15	13.78	17	C-4
45 05 52	4.50	4.50	3.82	3.37	2.92	2.47	0.63	1.18	4.72	13.78	34	1-4
45 05 51	1.46	1.28	1.10	0.97	0.83	0.72	0.48	0.98	3.15	17.72	21	C-4
45 05 52	3.82	3.37	2.92	2.47	2.25	1.93	0.63	1.18	4.72	17.72	42	1-4
45 05 51	1.17	1.01	0.88	0.76	0.67	0.56	0.48	0.98	3.15	21.65	25	C-4
45 05 52	2.92	2.70	2.25	2.07	1.80	1.55	0.63	1.18	4.72	21.65	50	1-4
45 05 51	0.97	0.85	0.74	0.63	0.56	0.47	0.48	0.98	3.15	25.59	29	C-4
45 05 52	2.70	2.25	1.98	1.73	1.51	1.28	0.63	1.18	4.72	25.59	59	1-4

	permissible load [lbs x 1000]											weight
type	1110	1130	1148	1166	1184	1200°F	E	A	B	C	H	[lbs]
49 05 55	1.17	1.06	0.94	0.83	0.72	0.65	8.82	9.84	5.51	12.99	7.87	14

Pipe clamps, clamp bases, OD 2.37" [60.3mm] (ND 50/2"), type 43, 45, 49

	permissible load [lbs x 1000]									weight	load
type	1110	1130	1148	1166	1184	1200°F	d_1	E	B	[lbs]	group
43 06 59	1.06	1.03	1.03	1.03	0.94	0.81	0.48	9.84	1.97	5.3	C-4

	permissible load [lbs x 1000]										weight	load
type	1110	1130	1148	1166	1184	1200°F	d_1	E	B	L	[lbs]	group
45 06 51	2.09	1.93	1.69	1.46	1.26	1.08	0.48	0.98	3.94	15.75	24	C-4
45 06 52	4.50	4.05	3.37	2.92	2.70	2.25	0.63	1.18	4.72	15.75	38	1-4
45 06 51	1.69	1.48	1.28	1.12	0.97	0.83	0.48	0.98	3.94	19.69	29	C-4
45 06 52	3.60	3.15	2.70	2.25	2.02	1.78	0.63	1.18	4.72	19.69	47	1-4
45 06 51	1.35	1.19	1.03	0.90	0.79	0.67	0.48	0.98	3.94	23.62	34	C-4
45 06 52	2.92	2.47	2.23	1.93	1.69	1.44	0.63	1.18	4.72	23.62	55	1-4
45 06 51	1.15	1.01	0.88	0.76	0.65	0.56	0.48	0.98	3.94	27.56	39	C-4
45 06 52	2.25	2.16	1.87	1.64	1.42	1.21	0.63	1.18	4.72	27.56	63	1-4

	permissible load [lbs x 1000]											weight
type	1110	1130	1148	1166	1184	1200°F	E	A	B	C	H	[lbs]
49 06 55	1.33	1.19	1.08	0.94	0.83	0.74	9.06	9.84	5.51	12.99	7.87	15

Pipe clamps, clamp bases, OD 2.87" [73mm] (ND 65/2 1/2"), type 43, 48, 49

	permissible load [lbs x 1000]									weight	load
type	1110	1130	1148	1166	1184	1200°F	d_1	E	B	[lbs]	group
43 07 59	1.06	1.03	1.03	1.03	0.94	0.81	0.48	10.04	1.97	6	C-4

	permissible load [lbs x 1000]									L		[lbs]		load
type	1110	1130	1148	1166	1184	1200°F	d_3	d_N	E_R	min	max	min	max	group
48 07 51	1.78	1.57	1.39	1.21	1.03	0.92	0.82	1.38	2.76	13.78	29.53	15	30	C-4
48 07 52	2.47	2.25	2.02	1.80	1.57	1.35	0.82	1.38	2.76	13.78	29.53	15	32	C-4
48 07 53	4.27	3.82	3.37	2.92	2.47	2.25	0.98	1.38	3.94	13.78	29.53	21	45	3-5

	permissible load [lbs x 1000]											weight
type	1110	1130	1148	1166	1184	1200°F	E	A	B	C	H	[lbs]
49 07 55	1.33	1.19	1.08	0.94	0.83	0.74	9.33	9.84	5.51	12.99	7.87	15

Selection table OD 3" - 5.25" Temperatures 1110-1200°F

Pipe clamps, clamp bases, OD 3" [76.1mm] (ND 65/2 1/2"), type 43, 48, 49

	permissible load [lbs x 1000]									weight	load
type	1110	1130	1148	1166	1184	1200°F	d_1	E	B	[lbs]	group
43 08 59	1.06	1.03	1.03	1.03	0.94	0.81	0.48	10.04	1.97	6	C-4

	permissible load [lbs x 1000]									L		weight [lbs]		load
type	1110	1130	1148	1166	1184	1200°F	d_3	d_N	E_R	min	max	min	max	group
48 08 51	1.78	1.57	1.39	1.21	1.03	0.92	0.82	1.38	2.76	13.78	29.53	15	30	C-4
48 08 52	2.47	2.25	2.02	1.80	1.57	1.35	0.82	1.38	2.76	13.78	29.53	15	32	C-4
48 08 53	4.27	3.82	3.37	2.92	2.47	2.25	0.98	1.38	3.94	13.78	29.53	21	45	3-5

	permissible load [lbs x 1000]											weight
type	1110	1130	1148	1166	1184	1200°F	E	A	B	C	H	[lbs]
49 08 55	1.37	1.24	1.10	0.99	0.85	0.76	9.37	9.84	5.51	12.99	7.87	15

Pipe clamps, clamp bases, OD 3.50" [88.9mm] (ND 80/3"), type 43, 48, 49

	permissible load [lbs x 1000]									weight	load
type	1110	1130	1148	1166	1184	1200°F	d_1	E	B	[lbs]	group
43 09 59	1.06	1.03	1.03	1.03	0.94	0.81	0.48	10.24	1.97	5.9	C-4

	permissible load [lbs x 1000]									L		weight [lbs]		load
type	1110	1130	1148	1166	1184	1200°F	d_3	d_N	E_R	min	max	min	max	group
48 09 51	1.82	1.62	1.44	1.24	1.08	0.94	0.82	1.38	2.95	13.78	33.46	13	34	C-4
48 09 52	2.47	2.25	2.02	1.78	1.53	1.35	0.82	1.38	3.35	13.78	33.46	15	40	C-4
48 09 53	4.27	3.82	3.37	2.92	2.47	2.25	0.98	1.38	3.94	13.78	33.46	21	53	3-5

	permissible load [lbs x 1000]											weight
type	1110	1130	1148	1166	1184	1200°F	E	A	B	C	H	[lbs]
49 09 55	2.00	1.80	1.62	1.42	1.26	1.10	11.57	12.01	6.69	15.16	9.84	22

Pipe clamps, OD 4.25" [108mm] (ND 100/4"), type 43, 48

	permissible load [lbs x 1000]									weight	load
type	1110	1130	1148	1166	1184	1200°F	d_1	E	B	[lbs]	group
43 10 59	2.18	2.07	1.84	1.60	1.37	1.15	0.63	10.63	2.76	11	1-4

	permissible load [lbs x 1000]									L		weight [lbs]		load
type	1110	1130	1148	1166	1184	1200°F	d_3	d_N	E_R	min	max	min	max	group
48 10 51	2.47	2.25	2.05	1.80	1.57	1.37	0.82	2.0	3.35	13.78	37.40	17	50	C-4
48 10 52	3.37	2.92	2.70	2.25	2.07	1.80	0.98	2.0	3.74	13.78	37.40	18	56	3-5
48 10 53	6.74	6.07	5.40	4.72	4.05	3.60	1.33	2.0	5.51	13.78	37.40	29	87	3-6

Pipe clamps, OD 4.50" [114.3mm] (ND 100/4"), type 43, 48

	permissible load [lbs x 1000]									weight	load
type	1110	1130	1148	1166	1184	1200°F	d_1	E	B	[lbs]	group
43 11 59	2.18	2.07	1.84	1.60	1.37	1.15	0.63	10.83	2.76	12	1-4

	permissible load [lbs x 1000]									L		weight [lbs]		load
type	1110	1130	1148	1166	1184	1200°F	d_3	d_N	E_R	min	max	min	max	group
48 11 51	2.47	2.25	2.05	1.80	1.57	1.37	0.82	2.0	3.35	13.78	37.40	17	50	C-4
48 11 52	3.37	2.92	2.70	2.25	2.07	1.80	0.98	2.0	3.74	13.78	37.40	18	56	3-5
48 11 53	6.74	6.07	5.40	4.72	4.05	3.60	1.33	2.0	5.51	13.78	37.40	29	87	3-6

Pipe clamps, OD 5.25" [133mm] (ND 125/5"), type 43, 48

	permissible load [lbs x 1000]								max.	weight	load
type	1110	1130	1148	1166	1184	1200°F	d_1	E	B	[lbs]	group
43 13 59	2.18	2.16	2.14	2	1.78	1.53	0.63	11.42	3.15	18	1-4

	permissible load [lbs x 1000]									L		weight [lbs]		load
type	1110	1130	1148	1166	1184	1200°F	d_3	d_N	E_R	min	max	min	max	group
48 13 51	2.92	2.70	2.25	2.07	1.80	1.57	0.82	2.0	3.74	15.75	39.37	20	59	C-4
48 13 52	4.27	3.82	3.37	2.92	2.47	2.23	0.98	2.0	4.33	15.75	39.37	25	73	3-5
48 13 53	7.42	6.52	5.85	5.17	4.27	3.82	1.33	2.0	5.91	15.75	39.37	36	99	4-6

type 43

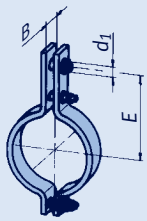

type 48

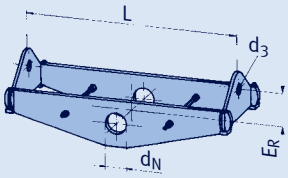

type 49

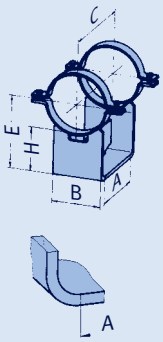

Selection table OD 5.50" - 8.625"
Temperatures 1110-1200°F

type 43

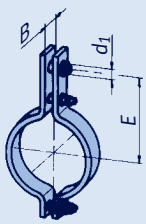

type 44

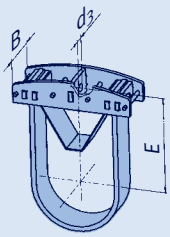

type 48

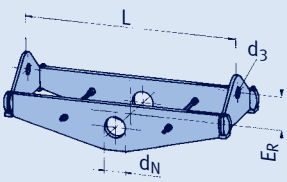

Pipe clamps, OD 5.50" [139.7mm] (ND 125/5"), type 43, 48

	permissible load [lbs x 1000]									weight	load
type	1110	1130	1148	1166	1184	1200°F	d_1	E	B	[lbs]	group
43 14 59	2.18	2.16	2.14	2.00	1.78	1.53	0.63	11.61	3.15	18	1-4

	permissible load [lbs x 1000]									L		weight [lbs]		load
type	1110	1130	1148	1166	1184	1200°F	d_3	d_N	E_R	min	max	min	max	group
48 14 51	2.92	2.70	2.25	2.07	1.80	1.57	0.82	2.0	3.74	15.75	39.37	20	60	C-4
48 14 52	4.27	3.82	3.37	2.92	2.47	2.23	0.98	2.0	4.33	15.75	39.37	25	73	3-5
48 14 53	7.42	6.52	5.85	5.17	4.27	3.82	1.33	2.0	5.91	15.75	39.37	36	99	4-6

Pipe clamps, OD 6.25" [159mm] (ND 150/6"), type 43, 48

	permissible load [lbs x 1000]									weight	load
type	1110	1130	1148	1166	1184	1200°F	d_1	E	B	[lbs]	group
43 16 59	2.18	2.16	2.14	2.00	1.78	1.53	0.63	12.40	3.15	19	1-4

	permissible load [lbs x 1000]									L		weight [lbs]		load
type	1110	1130	1148	1166	1184	1200°F	d_3	d_N	E_R	min	max	min	max	group
48 16 51	2.92	2.70	2.25	2.07	1.80	1.57	0.82	2.5	3.94	17.72	41.34	25	65	C-4
48 16 52	4.72	4.27	3.82	3.37	2.92	2.47	0.98	2.5	4.92	17.72	41.34	31	83	3-5
48 16 53	8.99	8.09	7.19	6.29	5.40	4.72	1.33	2.5	5.91	17.72	41.34	47	123	4-6

Pipe clamps, OD 6.625" [168.3mm] (ND 150/6"), type 43, 48

	permissible load [lbs x 1000]									weight	load
type	1110	1130	1148	1166	1184	1200°F	d_1	E	B	[lbs]	group
43 17 59	2.18	2.16	2.14	2.00	1.78	1.53	0.63	12.60	3.15	20	1-4

	permissible load [lbs x 1000]									L		weight [lbs]		load
type	1110	1130	1148	1166	1184	1200°F	d_3	d_N	E_R	min	max	min	max	group
48 17 51	2.92	2.70	2.25	2.07	1.80	1.57	0.82	2.5	3.94	17.72	41.34	25	65	C-4
48 17 52	4.72	4.27	3.82	3.37	2.92	2.47	0.98	2.5	4.92	17.72	41.34	31	83	3-5
48 17 53	8.99	8.09	7.19	6.29	5.40	4.72	1.33	2.5	5.91	17.72	41.34	47	123	4-6

Pipe clamps, OD 7.625" [193.7mm] (ND 175/7"), type 43, 48

	permissible load [lbs x 1000]									weight	load
type	1110	1130	1148	1166	1184	1200°F	d_1	E	B	[lbs]	group
43 19 59	3.40	3.30	3.30	3.30	3.00	2.60	0.79	13.98	3.94	35	3-6

	permissible load [lbs x 1000]									L		weight [lbs]		load
type	1110	1130	1148	1166	1184	1200°F	d_3	d_N	E_R	min	max	min	max	group
48 19 51	2.5	2.2	2.0	1.8	1.6	1.3	0.82	2.5	4.33	21.65	45.28	33	72	C-4
48 19 52	3.8	3.8	3.4	2.9	2.5	2.2	0.98	2.5	4.92	21.65	45.28	40	91	3-5
48 19 53	6.3	5.6	4.9	4.3	3.6	3.1	0.98	2.5	5.91	21.65	45.28	53	114	3-5
48 19 54	11.2	9.9	8.8	7.6	6.5	5.8	1.61	2.5	6.30	21.65	45.28	71	163	4-7

Pipe clamps, OD 8.625" [219.1mm] (ND 200/8"), type 44, 48

	permissible load [lbs x 1000]								max	max.	weight	load
type	1110	1130	1148	1166	1184	1200°F	d_3	E	B	insul.	[lbs]	group
44 22 51	2.5	2.2	2.0	1.7	1.5	1.3	0.82	16.93	4.53	11.02	42	C-4
44 22 52	6.1	5.2	4.5	4.0	3.4	2.9	1.33	18.11	4.13	11.02	80	4-6
44 22 53	9.0	7.9	6.7	5.8	5.2	4.3	1.81	19.09	6.50	11.02	122	5-8

	permissible load [lbs x 1000]									L		weight [lbs]		load
type	1110	1130	1148	1166	1184	1200°F	d_3	d_N	E_R	min	max	min	max	group
48 22 51	2.5	2.2	2.1	1.8	1.6	1.4	0.82	3.13	5.12	21.65	53.15	37	99	C-4
48 22 52	5.8	5.2	4.5	3.8	3.4	2.9	0.98	3.13	5.91	21.65	53.15	51	141	3-5
48 22 53	7.6	7.0	6.1	5.4	4.5	4.0	1.61	3.13	6.69	21.65	53.15	66	176	4-7
48 22 54	13.7	12.1	10.8	9.4	8.1	7.0	1.81	3.13	7.87	21.65	53.15	94	249	5-8

Selection table OD 9.625" - 12.75" Temperatures 1110-1200°F

4

Pipe clamps, OD 9.625" [244.5mm] (ND 225/ 9"), type 44, 48

	permissible load [lbs x 1000]								max	max.	weight	load
type	1110	1130	1148	1166	1184	1200°F	d_3	E	B	insul.	[lbs]	group
44 24 51	2.5	2.2	2.0	1.8	1.5	1.3	0.82	17.32	4.72	11.02	45	C-4
44 24 52	5.8	5.2	4.3	3.8	3.4	2.7	1.33	18.70	4.13	11.02	84	4-6
44 24 53	9.0	7.9	6.7	6.1	5.2	4.3	1.81	19.69	6.77	11.02	130	5-8

	permissible load [lbs x 1000]									L		weight [lbs]		load
type	1110	1130	1148	1166	1184	1200°F	d_3	d_N	E_R	min	max	min	max	group
48 24 51	3.1	2.7	2.5	2.2	1.9	1.6	0.98	3.13	4.33	21.65	53.15	39	105	3-5
48 24 52	6.1	5.6	4.9	4.3	3.8	3.1	0.98	3.13	5.91	21.65	53.15	55	149	3-5
48 24 53	9.0	8.1	7.2	6.3	5.4	4.7	1.61	3.13	6.30	21.65	53.15	67	183	4-7
48 24 54	15.3	13.5	11.9	10.3	9.0	7.9	1.81	3.13	7.09	21.65	53.15	100	261	5-8

Pipe clamps, OD 10.50" [267mm] (ND 250/10"), type 44, 48

	permissible load [lbs x 1000]								max	max.	weight	load
type	1110	1130	1148	1166	1184	1200°F	d_3	E	B	insul.	[lbs]	group
44 26 51	2.5	2.2	2.0	1.8	1.5	1.3	0.82	17.91	4.92	11.02	48	C-4
44 26 52	6.1	5.2	4.5	3.8	3.4	2.9	1.33	19.09	4.41	11.02	90	4-6
44 26 53	9.4	8.3	7.2	6.3	5.4	4.5	1.81	19.88	7.17	11.02	138	5-8

	permissible load [lbs x 1000]									L		weight [lbs]		load
type	1110	1130	1148	1166	1184	1200°F	d_3	d_N	E_R	min	max	min	max	group
48 26 51	3.4	3.1	2.7	2.5	2.1	1.9	0.98	3.63	4.72	23.62	55.12	47	122	3-5
48 26 52	6.5	5.8	5.2	4.5	3.8	3.4	0.98	3.63	5.91	23.62	55.12	63	166	3-5
48 26 53	9.2	8.3	7.4	6.5	5.6	4.9	1.61	3.63	6.30	23.62	55.12	77	203	4-7
48 26 54	16.6	14.6	13.0	11.2	9.7	8.5	1.81	3.63	7.68	23.62	55.12	117	296	5-8

type 44

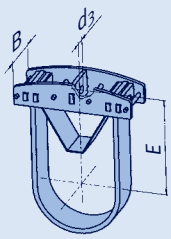

Pipe clamps, OD 10.75" [273mm] (ND 250/10"), type 44, 48

	permissible load [lbs x 1000]								max	max.	weight	load
type	1110	1130	1148	1166	1184	1200°F	d_3	E	B	insul.	[lbs]	group
44 27 51	2.2	2.2	2.0	1.8	1.5	1.3	0.82	17.91	4.92	11.02	48	C-4
44 27 52	6.1	5.2	4.5	3.8	3.4	2.9	1.33	19.09	4.41	11.02	90	4-6
44 27 53	9.0	8.3	7.2	6.3	5.4	4.5	1.81	19.88	7.17	11.02	139	5-8

	permissible load [lbs x 1000]									L		weight [lbs]		load
type	1110	1130	1148	1166	1184	1200°F	d_3	d_N	E_R	min	max	min	max	group
48 27 51	3.4	3.1	2.7	2.5	2.1	1.9	0.98	3.63	4.72	23.62	55.12	48	122	3-5
48 27 52	6.5	5.8	5.2	4.5	3.8	3.4	0.98	3.63	5.91	23.62	55.12	63	166	3-5
48 27 53	9.2	8.3	7.4	6.5	5.6	4.9	1.61	3.63	6.30	23.62	55.12	78	203	4-7
48 27 54	16.6	14.6	13.0	11.2	9.7	8.5	1.81	3.63	7.68	23.62	55.12	117	296	5-8

type 48

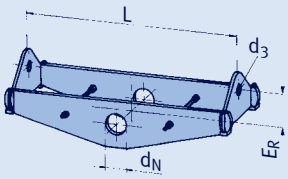

Pipe clamps, OD 12.75" [323.9mm] (ND 300/12"), type 44, 48

	permissible load [lbs x 1000]								max	max.	weight	load
type	1110	1130	1148	1166	1184	1200°F	d_3	E	B	insul.	[lbs]	group
44 32 51	4.0	4.0	4.0	3.4	2.9	2.5	0.98	19.69	3.94	11.42	85	3-5
44 32 52	6.7	6.7	6.5	6.1	5.2	4.5	1.33	20.08	6.89	11.42	134	4-6
44 32 53	13.5	13.3	11.9	10.6	9.0	7.6	1.81	20.87	5.79	11.42	192	5-8
44 32 54	18.4	18.0	15.7	13.9	11.9	9.7	2.00	21.46	7.68	11.42	249	6-9

	permissible load [lbs x 1000]									L		weight [lbs]		load
type	1110	1130	1148	1166	1184	1200°F	d_3	d_N	E_R	min	max	min	max	group
48 32 51	5.2	4.7	4.0	3.6	3.1	2.7	0.98	4.63	5.91	27.56	55.12	72	162	3-5
48 32 52	9.0	8.8	7.6	6.7	5.8	5.2	1.61	4.63	7.09	27.56	55.12	97	223	4-7
48 32 53	13.5	11.9	10.6	9.2	7.9	7.0	1.81	4.63	7.09	27.56	55.12	120	272	5-8
48 32 54	16.0	15.3	13.5	11.7	10.1	9.0	1.81	4.63	8.27	27.56	55.12	137	312	5-8
48 32 55	20.7	20.2	18.0	15.7	13.7	11.9	2.00	4.63	9.84	31.50	55.12	197	381	6-9
48 32 56	33.7	30.6	27.0	23.8	20.7	18.0	2.00	4.63	9.84	31.50	55.12	250	503	6-9

Selection table OD 14" - 16"
Temperatures 1110-1200°F

type 44

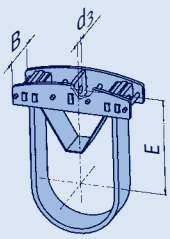

type 48

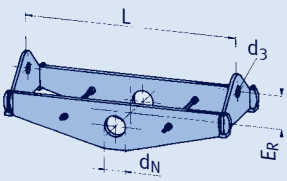

① For trunnion hole diameter 6.88 inch change last digit of type designation to a letter according to the table below. The weights may vary slightly.

change last digit	
from	to
48 41 51	48 41 5A
48 41 52	48 41 5B
48 41 53	48 41 5C
48 41 54	48 41 5D
48 41 55	48 41 5E
48 41 56	48 41 5F

Pipe clamps, OD 14" [355.6mm] (ND 350/14"), type 44, 48

	permissible load [lbs x 1000]								max	max.	weight	load
type	1110	1130	1148	1166	1184	1200°F	d_3	E	B	insul.	[lbs]	group
44 36 51	4.7	4.5	4.0	3.6	2.9	2.5	0.98	20.47	4.13	11.42	94	3-5
44 36 52	6.7	6.7	6.5	6.1	5.2	4.5	1.33	20.67	7.17	11.42	144	4-6
44 36 53	12.6	12.1	11.7	10.3	8.8	7.4	1.81	21.46	5.79	11.42	202	5-8
44 36 54	20.7	18.0	15.5	13.7	11.7	9.7	2.00	21.85	7.68	11.42	276	6-9

	permissible load [lbs x 1000]									L		weight [lbs]		load
type	1110	1130	1148	1166	1184	1200°F	d_3	d_N	E_R	min	max	min	max	group
48 36 51	4.5	4.0	3.6	2.9	2.7	2.2	0.98	4.63	5.51	27.56	59.06	72	167	3-5
48 36 52	6.3	5.6	4.9	4.3	3.6	3.1	1.33	4.63	6.30	27.56	59.06	84	195	4-6
48 36 53	10.8	9.4	8.3	7.2	6.3	5.4	1.61	4.63	7.09	31.50	59.06	127	266	4-7
48 36 54	16.4	16.0	14.2	12.4	10.8	9.4	1.81	4.63	8.66	31.50	59.06	169	358	5-8
48 36 55	27.0	23.6	20.9	18.2	15.7	13.9	2.00	4.63	9.45	31.50	59.06	225	472	6-9
48 36 56	39.8	35.5	31.5	27.4	23.8	20.9	2.00	4.63	9.45	31.50	59.06	286	603	6-9

Pipe clamps, OD 14.50" [368mm] (ND 350/14"), type 44, 48

	permissible load [lbs x 1000]								max	max.	weight	load
type	1110	1130	1148	1166	1184	1200°F	d_3	E	B	insul.	[lbs]	group
44 37 51	4.5	4.3	4.0	3.6	3.1	2.7	0.98	20.87	4.41	11.42	99	3-5
44 37 52	6.7	6.7	6.5	6.3	5.4	4.5	1.33	21.06	7.48	11.42	154	4-6
44 37 53	12.1	11.9	11.7	10.6	9.0	7.4	1.81	21.65	5.91	11.42	207	5-8
44 37 54	20.5	17.8	15.5	13.5	11.5	9.7	2.00	22.05	7.68	11.42	280	6-9

	permissible load [lbs x 1000]									L		weight [lbs]		load
type	1110	1130	1148	1166	1184	1200°F	d_3	d_N	E_R	min	max	min	max	group
48 37 51	4.5	4.0	3.6	2.9	2.7	2.2	0.98	4.63	5.51	29.53	59.06	76	167	3-5
48 37 52	6.3	5.6	4.9	4.3	3.6	3.1	1.33	4.63	6.30	29.53	59.06	88	195	4-6
48 37 53	10.8	9.4	8.3	7.2	6.3	5.4	1.61	4.63	7.09	29.53	59.06	123	267	4-7
48 37 54	16.4	16.0	14.2	12.4	10.8	9.4	1.81	4.63	8.66	29.53	59.06	162	359	5-8
48 37 55	27.0	23.6	20.9	18.2	15.7	13.9	2.00	4.63	9.45	33.46	59.06	237	474	6-9
48 37 56	39.8	35.5	31.5	27.4	23.8	20.9	2.00	4.63	9.45	33.46	59.06	300	605	6-9

Pipe clamps, OD 16" [406.4mm] (ND 400/16"), type 44, 48

	permissible load [lbs x 1000]								max	max.	weight	load
type	1110	1130	1148	1166	1184	1200°F	d_3	E	B	insul.	[lbs]	group
44 41 51	4.3	4.0	3.8	3.4	2.9	2.5	0.98	22.05	4.41	11.81	106	3-5
44 41 52	10.1	9.9	9.4	8.3	7.2	5.8	1.81	22.83	5.51	11.81	200	5-8
44 41 53	17.5	17.3	15.3	13.5	11.5	9.7	2.00	22.83	7.87	11.81	295	6-9
44 41 54	24.3	23.8	21.1	18.2	15.3	12.8	2.00	23.23	7.48	11.81	335	6-9

	permissible load [lbs x 1000]									L		weight [lbs]		load
type	1110	1130	1148	1166	1184	1200°F	d_3	d_N ①	E_R	min	max	min	max	group
48 41 51	5.2	4.7	4.0	3.6	3.1	2.7	0.98	5.63	6.30	31.50	62.99	96	219	3-5
48 41 52	9.2	8.1	7.2	6.3	5.4	4.7	1.61	5.63	7.09	31.50	62.99	124	276	4-7
48 41 53	12.1	11.0	9.7	8.5	7.4	6.5	1.81	5.63	7.87	31.50	62.99	155	337	5-8
48 41 54	18.4	16.2	14.4	12.6	10.8	9.4	1.81	5.63	9.45	31.50	62.99	202	429	5-8
48 41 55	30.8	28.1	24.7	21.6	18.7	16.4	2.00	5.63	9.06	35.43	62.99	293	589	6-9
48 41 56	44.1	41.8	37.1	32.4	28.1	24.5	2.40	5.63	9.06	35.43	62.99	357	729	7-10

Selection table OD 16.50" - 20"
Temperatures 1110-1200°F

4

Pipe clamps, OD 16.50" [419mm] (ND 400/16"), type 44, 48

	permissible load [lbs x 1000]								max	max.	weight	load
type	1110	1130	1148	1166	1184	1200°F	d_3	E	B	insul.	[lbs]	group
44 42 51	4.0	4.0	4.0	3.6	3.1	2.7	0.98	22.24	4.53	11.81	110	3-5
44 42 52	10.3	10.1	9.9	8.5	7.4	6.3	1.81	23.03	5.51	11.81	208	5-8
44 42 53	17.3	17.1	16.0	13.9	11.9	10.1	2.00	23.03	8.27	11.81	307	6-9
44 42 54	23.6	23.4	21.1	18.4	15.5	12.8	2.00	23.43	7.68	11.81	343	6-9

	permissible load [lbs x 1000]									L		weight [lbs]		load
type	1110	1130	1148	1166	1184	1200°F	d_3	d_N ①	E_R	min	max	min	max	group
48 42 51	5.2	4.7	4.0	3.6	3.1	2.7	0.98	5.63	6.30	31.50	62.99	97	220	3-5
48 42 52	9.2	8.1	7.2	6.3	5.4	4.7	1.61	5.63	7.09	31.50	62.99	125	277	4-7
48 42 53	12.1	11.0	9.7	8.5	7.4	6.5	1.81	5.63	7.87	31.50	62.99	157	338	5-8
48 42 54	18.4	16.2	14.4	12.6	10.8	9.4	1.81	5.63	9.45	35.43	62.99	220	430	5-8
48 42 55	30.8	28.1	24.7	21.6	18.7	16.4	2.00	5.63	9.06	35.43	62.99	295	591	6-9
48 42 56	44.1	41.8	37.1	32.4	28.1	24.5	2.40	5.63	9.06	35.43	62.99	359	731	7-10

Pipe clamps, OD 18" [457.2mm] (ND 450/18"), type 44, 48

	permissible load [lbs x 1000]								max	max.	weight	load
type	1110	1130	1148	1166	1184	1200°F	d_3	E	B	insul.	[lbs]	group
44 46 51	4.3	4.3	4.0	3.6	3.1	2.7	0.98	23.23	4.80	11.81	121	3-5
44 46 52	8.5	8.3	7.4	6.5	5.4	4.5	1.81	23.62	5.51	11.81	190	5-8
44 46 53	16.0	15.7	14.4	12.6	10.8	9.0	2.00	23.82	7.68	11.81	310	6-9
44 46 54	24.3	23.8	22.7	20.0	17.1	14.4	2.00	24.41	12.40	11.81	423	6-9
44 46 55	32.4	32.1	30.8	27.0	23.2	20.0	2.40	25.20	10.04	11.81	507	7-10

	permissible load [lbs x 1000]									L		weight [lbs]		load
type	1110	1130	1148	1166	1184	1200°F	d_3	d_N ①	E_R	min	max	min	max	group
48 46 51	8.8	8.1	7.2	6.3	5.4	4.7	1.61	5.63	6.69	35.43	66.93	151	309	4-7
48 46 52	10.3	9.2	8.1	7.2	6.1	5.4	1.81	5.63	7.48	35.43	66.93	162	330	5-8
48 46 53	16.4	15.7	13.9	12.1	10.6	9.2	1.81	5.63	9.06	35.43	66.93	224	454	5-8
48 46 54	34.4	32.4	28.8	25.0	21.6	18.9	2.00	5.63	10.04	39.37	66.93	373	708	6-9
48 46 55	37.8	36.2	32.1	28.3	24.5	21.4	2.40	5.63	10.83	39.37	66.93	414	759	7-10
48 46 56	58.5	54.4	48.1	42.0	36.4	31.9	2.40	5.63	10.83	39.37	66.93	537	990	7-10

Pipe clamps, OD 20" [508mm] (ND 500/20"), type 44, 48

	permissible load [lbs x 1000]								max	max.	weight	load
type	1110	1130	1148	1166	1184	1200°F	d_3	E	B	insul.	[lbs]	group
44 51 51	4.3	4.0	3.8	3.4	2.9	2.5	0.98	24.21	4.80	11.81	131	3-5
44 51 52	8.8	8.5	8.1	7.2	6.1	5.2	1.81	24.80	5.51	11.81	219	5-8
44 51 53	17.1	16.9	16.2	14.2	12.1	10.1	2.00	25.00	9.06	11.81	365	6-9
44 51 54	27.4	25.4	22.3	19.3	16.2	13.5	2.40	25.59	8.66	11.81	462	7-10
44 51 55	36.2	36.0	32.8	28.8	24.7	21.1	2.40	26.18	11.02	11.81	621	7-10

	permissible load [lbs x 1000]									L		weight [lbs]		load
type	1110	1130	1148	1166	1184	1200°F	d_3	d_N	E_R	min	max	min	max	group
48 51 51	9.2	8.1	7.2	6.3	5.4	4.7	1.61	6.88	7.28	39.37	70.87	180	353	4-7
48 51 52	10.3	9.2	8.1	7.2	6.3	5.4	1.81	6.88	7.87	39.37	70.87	193	378	5-8
48 51 53	17.5	16.0	14.2	12.4	10.8	9.4	1.81	6.88	9.25	39.37	70.87	266	519	5-8
48 51 54	32.4	32.4	28.8	25.0	21.6	18.9	2.00	6.88	10.83	41.34	70.87	412	801	6-9
48 51 55	45.4	40.2	35.5	31.0	26.8	23.6	2.40	6.88	12.20	41.34	70.87	505	931	7-10
48 51 56	63.8	59.8	53.1	46.3	40.0	35.1	2.40	6.88	12.20	41.34	70.87	643	1177	7-10

① For trunnion hole diameter 6.88 inch change last digit of type designation to a letter according to the table below. The weights may vary slightly.

type 44

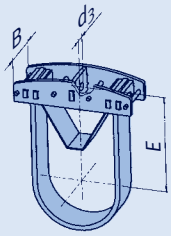

type 48

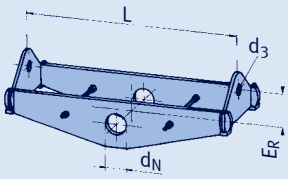

change last digit	
from	to
48 4. 51	48 4. 5A
48 4. 52	48 4. 5B
48 4. 53	48 4. 5C
48 4. 54	48 4. 5D
48 4. 55	48 4. 5E
48 4. 56	48 4. 5F

e.g. 48 46 52 => 48 46 5B

Selection table OD 22" - 26"
Temperatures 1110-1200°F

Pipe clamps, OD 22" [558.8mm] (ND 550/22"), type 44, 48

	permissible load [lbs x 1000]								max	max.	weight	load
type	1110	1130	1148	1166	1184	1200°F	d_3	E	B	insul.	[lbs]	group
44 56 51	8.3	8.1	8.1	7.2	6.1	5.2	1.81	25.79	5.51	11.81	240	5-8
44 56 52	17.3	17.1	16.2	14.2	12.1	10.3	2.00	26.18	9.53	11.81	403	6-9
44 56 53	26.3	25.6	22.5	19.3	16.4	13.5	2.40	26.57	9.06	11.81	507	7-10
44 56 54	32.6	32.1	30.1	26.1	21.8	18.0	2.40	27.17	12.28	11.81	613	7-10
44 56 55	51.5	50.8	44.7	38.9	32.6	27.0	2.79	27.76	10.91	11.81	862	8-30

	permissible load [lbs x 1000]									L		weight [lbs]		load
type	1110	1130	1148	1166	1184	1200°F	d_3	d_N	E_R	min	max	min	max	group
48 56 51	9.9	8.8	7.6	6.7	5.8	5.2	1.61	6.88	7.87	43.31	74.80	213	399	4-7
48 56 52	13.7	12.1	10.8	9.4	8.3	7.2	1.81	6.88	9.25	43.31	74.80	268	495	5-8
48 56 53	17.8	16.0	14.2	12.4	10.8	9.4	1.81	6.88	9.45	43.31	74.80	303	567	5-8
48 56 54	33.5	31.7	28.1	24.5	21.1	18.7	2.00	6.88	11.02	43.31	74.80	449	864	6-9
48 56 55	53.1	48.8	43.2	37.8	32.8	28.8	2.40	6.88	13.98	47.24	74.80	668	1163	7-10
48 56 56	72.8	72.4	64.7	56.4	48.8	42.7	2.40	6.88	13.98	47.24	74.80	871	1449	7-10

type 44

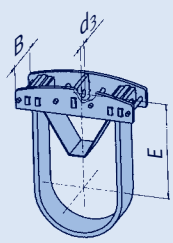

Pipe clamps, OD 24" [609.6mm] (ND 600/24"), type 44, 48

	permissible load [lbs x 1000]								max	max.	weight	load
type	1110	1130	1148	1166	1184	1200°F	d_3	E	B	insul.	[lbs]	group
44 61 51	8.8	8.5	8.3	7.4	6.3	5.4	1.81	27.36	5.51	12.20	268	5-8
44 61 52	18.0	17.8	16.4	14.4	12.4	10.3	2.00	27.76	10.04	12.20	447	6-9
44 61 53	26.1	25.4	22.3	19.3	16.2	13.5	2.40	28.15	9.41	12.20	552	7-10
44 61 54	36.9	36.4	35.7	30.8	25.9	21.6	2.79	29.13	9.06	12.20	745	8-30
44 61 55	56.0	55.1	49.7	43.6	36.6	30.3	2.79	29.53	12.91	12.20	1046	8-30

	permissible load [lbs x 1000]									L		weight [lbs]		load
type	1110	1130	1148	1166	1184	1200°F	d_3	d_N ①	E_R	min	max	min	max	group
48 61 51	9.7	8.8	7.6	6.7	5.8	5.2	1.61	7.88	8.66	47.24	78.74	255	460	4-7
48 61 52	18.7	16.4	14.6	12.8	11.0	9.7	1.81	7.88	8.86	47.24	78.74	353	638	5-8
48 61 53	22.7	20.9	18.7	16.2	13.9	12.4	1.81	7.88	11.02	47.24	78.74	423	756	5-8
48 61 54	33.0	31.7	28.1	24.7	21.4	18.7	2.00	7.88	11.61	51.18	78.74	570	960	6-9
48 61 55	50.1	48.3	42.7	37.3	32.1	28.3	2.40	7.88	13.98	51.18	78.74	768	1282	7-10
48 61 56	62.9	59.8	53.1	46.5	40.2	35.3	2.79	7.88	13.78	51.18	78.74	870	1440	8-30
48 61 57	95.3	89.7	79.4	69.2	60.0	52.6	2.79	7.88	13.78	51.18	78.74	1079	1851	8-30

① For trunnion hole diameter 8.88 inch change last digit of type designation to a letter according to the table below. The weights may vary slightly.

type 48

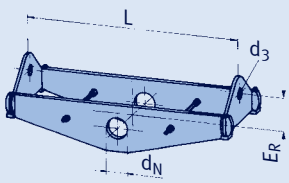

Pipe clamps, OD 26" [660.4mm] (ND 650/26"), type 44, 48

	permissible load [lbs x 1000]								max	max.	weight	load
type	1110	1130	1148	1166	1184	1200°F	d_3	E	B	insul.	[lbs]	group
44 66 51	8.1	8.1	7.9	7.2	6.1	5.2	1.81	28.35	5.51	12.20	282	5-8
44 66 52	17.1	16.9	16.2	14.2	12.1	10.1	2.00	28.74	10.24	12.20	480	6-9
44 66 53	27.0	25.4	22.3	19.3	16.2	13.5	2.40	29.33	9.84	12.20	600	7-10
44 66 54	36.9	36.4	35.3	30.6	25.6	21.4	2.79	30.31	9.25	12.20	799	8-30
44 66 55	55.5	54.9	49.9	43.6	36.6	30.3	2.79	30.51	13.31	12.20	1119	8-30

	permissible load [lbs x 1000]									L		weight [lbs]		load
type	1110	1130	1148	1166	1184	1200°F	d_3	d_N	E_R	min	max	min	max	group
48 66 51	11.5	10.1	9.0	7.9	6.7	5.8	1.61	8.88	9.06	49.21	80.71	326	559	4-7
48 66 52	18.4	16.2	14.4	12.6	10.8	9.4	1.81	8.88	9.06	49.21	80.71	395	697	5-8
48 66 53	25.4	22.3	19.8	17.3	14.8	13.0	1.81	8.88	11.02	49.21	80.71	485	846	5-8
48 66 54	35.5	32.4	28.6	25.0	21.6	18.9	2.00	8.88	12.20	49.21	80.71	607	1050	6-9
48 66 55	50.8	49.2	43.6	38.2	33.0	29.0	2.40	8.88	12.99	53.15	80.71	811	1344	7-10
48 66 56	67.4	60.7	53.7	47.0	40.7	35.7	2.79	8.88	13.78	53.15	80.71	948	1546	8-30
48 66 57	98.9	90.1	79.8	69.7	60.2	52.8	2.79	8.88	13.78	53.15	80.71	1211	1988	8-30

change last digit

from	to
48 61 51	48 61 5A
48 61 52	48 61 5B
48 61 53	48 61 5C
48 61 54	48 61 5D
48 61 55	48 61 5E
48 61 56	48 61 5F
48 61 57	48 61 5G

Selection table OD 28" - 32"
Temperatures 1110-1200°F

Pipe clamps, OD 28" [711.2mm] (ND 700/28"), type 44, 48

	permissible load [lbs x 1000]								max	max.	weight	load
type	1110	1130	1148	1166	1184	1200°F	d_3	E	B	insul.	[lbs]	group
44 71 51	11.2	11.2	10.1	8.8	7.6	6.3	1.81	29.13	6.50	12.20	354	5-8
44 71 52	16.9	16.6	16.2	14.2	12.1	10.1	2.00	29.92	10.63	12.20	520	6-9
44 71 53	26.1	25.2	22.3	19.1	16.2	13.5	2.40	30.31	10.04	12.20	641	7-10
44 71 54	33.3	33.0	31.9	27.7	23.2	19.3	2.40	30.91	8.54	12.20	740	7-10
44 71 55	46.3	45.6	42.0	36.2	30.6	25.4	2.79	31.30	11.30	12.20	1022	8-30
44 71 56	59.6	58.9	55.8	49.0	41.8	34.8	2.79	31.89	10.43	12.20	1264	9-30

	permissible load [lbs x 1000]									L		weight [lbs]		load
type	1110	1130	1148	1166	1184	1200°F	d_3	d_N	E_R	min	max	min	max	group
48 71 51	12.6	11.0	9.7	8.5	7.4	6.5	1.61	8.88	9.06	51.18	82.68	358	604	4-7
48 71 52	17.3	16.2	14.4	12.6	10.8	9.4	1.81	8.88	9.06	51.18	82.68	419	722	5-8
48 71 53	28.6	25.2	22.3	19.6	16.9	14.8	2.00	8.88	11.02	51.18	82.68	542	937	6-9
48 71 54	34.6	31.7	28.1	24.5	21.4	18.7	2.00	8.88	12.20	55.12	82.68	676	1088	6-9
48 71 55	51.3	49.0	43.6	38.2	33.0	29.0	2.40	8.88	13.19	55.12	82.68	860	1407	7-10
48 71 56	71.0	63.4	56.2	49.0	42.5	37.3	2.79	8.88	13.98	57.09	82.68	1051	1652	8-30
48 71 57	105.4	96.0	85.2	74.2	64.3	56.4	2.79	8.88	13.98	57.09	82.68	1360	2142	9-30

type 44

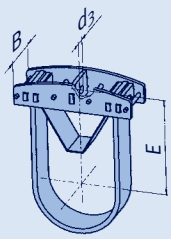

Pipe clamps, OD 30" [762mm] (ND 750/30"), type 44, 48

	permissible load [lbs x 1000]								max	max.	weight	load
type	1110	1130	1148	1166	1184	1200°F	d_3	E	B	insul.	[lbs]	group
44 76 51	11.2	11.0	10.3	9.0	7.9	6.5	1.81	30.31	6.89	12.20	387	5-8
44 76 52	17.5	17.3	16.2	14.2	12.1	10.1	2.00	31.10	11.02	12.20	563	6-9
44 76 53	26.1	25.4	22.3	19.3	16.2	13.5	2.40	31.50	10.43	12.20	690	7-10
44 76 54	36.9	36.4	36.0	31.0	26.1	21.8	2.79	32.09	9.92	12.20	965	8-30
44 76 55	50.6	49.9	47.2	40.7	34.4	28.6	2.79	32.28	12.99	12.20	1204	9-30
44 76 56	72.4	71.9	65.6	57.6	49.5	40.5	3.18	32.87	12.68	12.20	1587	10-40

	permissible load [lbs x 1000]									L		weight [lbs]		load
type	1110	1130	1148	1166	1184	1200°F	d_3	d_N ①	E_R	min	max	min	max	group
48 76 51	13.7	12.1	10.8	9.4	8.1	7.2	1.61	9.88	10.24	59.06	90.55	464	756	4-7
48 76 52	18.4	16.2	14.4	12.6	10.8	9.4	1.81	9.88	10.24	59.06	90.55	520	853	5-8
48 76 53	27.2	24.1	21.1	18.7	16.2	14.2	2.00	9.88	12.20	59.06	90.55	656	1074	6-9
48 76 54	32.4	32.1	28.6	24.7	21.6	18.9	2.00	9.88	13.39	59.06	90.55	761	1289	6-9
48 76 55	51.7	48.6	43.2	37.8	32.6	28.6	2.40	9.88	12.99	59.06	90.55	991	1638	7-10
48 76 56	81.8	72.4	64.3	56.2	48.8	42.7	2.79	9.88	16.14	62.99	90.55	1359	2172	8-30
48 76 57	114.0	109.0	96.7	84.3	73.1	64.1	2.79	9.88	16.14	62.99	90.55	1750	2697	9-30

type 48

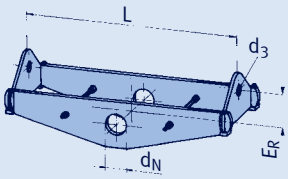

Pipe clamps, OD 32" [812.8mm] (ND 800/32"), type 44, 48

	permissible load [lbs x 1000]								max	max.	weight	load
type	1110	1130	1148	1166	1184	1200°F	d_3	E	B	insul.	[lbs]	group
44 81 51	17.1	16.9	16.4	14.4	12.4	10.3	2.00	32.48	11.61	12.60	617	6-9
44 81 52	26.8	25.4	22.3	19.3	16.2	13.5	2.40	33.07	10.91	12.60	752	7-10
44 81 53	36.9	36.4	33.7	29.2	24.5	20.5	2.79	33.46	9.65	12.60	996	8-30
44 81 54	37.3	36.9	36.6	33.9	28.6	23.8	2.79	33.66	11.30	12.60	1123	8-30
44 81 55	50.6	49.9	46.8	40.5	33.9	28.3	2.79	33.66	13.39	12.60	1282	9-30
44 81 56	73.1	72.6	66.1	58.0	49.7	40.5	3.18	34.45	13.31	12.60	1711	10-40

	permissible load [lbs x 1000]									L		weight [lbs]		load
type	1110	1130	1148	1166	1184	1200°F	d_3	d_N ①	E_R	min	max	min	max	group
48 81 51	15.5	13.7	12.1	10.6	9.2	8.1	1.81	9.88	11.02	62.99	94.49	535	854	5-8
48 81 52	19.1	18.4	16.4	14.2	12.4	10.8	1.81	9.88	11.81	62.99	94.49	609	977	5-8
48 81 53	26.5	24.1	21.4	18.7	16.2	14.2	2.00	9.88	12.99	62.99	94.49	725	1166	6-9
48 81 54	33.9	32.4	28.8	25.0	21.6	19.1	2.00	9.88	13.78	62.99	94.49	873	1383	6-9
48 81 55	52.2	49.2	43.6	38.2	33.0	29.0	2.40	9.88	13.78	62.99	94.49	1099	1750	7-10
48 81 56	85.7	82.3	72.8	63.6	55.1	48.3	2.79	9.88	17.72	62.99	94.49	1596	2490	8-30
48 81 57	126.6	122.5	108.6	94.6	82.1	71.9	2.79	9.88	17.72	62.99	94.49	1979	3138	9-30

① For trunnion hole diameter 11.0 inch change last digit of type designation to a letter according to the table below. The weights may vary slightly.

change last digit	
from	to
48 .. 51	48 .. 5A
48 .. 52	48 .. 5B
48 .. 53	48 .. 5C
48 .. 54	48 .. 5D
48 .. 55	48 .. 5E
48 .. 56	48 .. 5F
48 .. 57	48 .. 5G

e.g. 48 81 54 => 48 81 5D

Selection table OD 34" - 38"
Temperatures 1110-1200°F

type 44

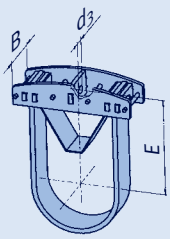

type 48

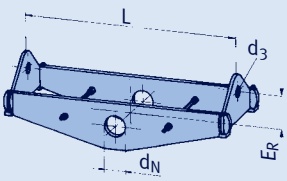

Pipe clamps, OD 34" [863.6mm] (ND 850/34"), type 44, 48

	permissible load [lbs x 1000]								max	max.	weight	load
type	1110	1130	1148	1166	1184	1200°F	d_3	E	B	insul.	[lbs]	group
44 86 51	19.1	17.1	14.6	12.8	11.0	9.2	2.00	33.27	10.63	12.60	617	6-9
44 86 52	27.4	26.1	22.5	19.8	17.1	14.6	2.40	34.25	9.65	12.60	787	7-10
44 86 53	36.9	36.0	31.2	27.2	22.9	19.1	2.79	34.65	9.29	12.60	1023	8-30
44 86 54	45.6	42.3	36.6	32.1	27.0	22.5	2.79	35.04	11.02	12.60	1172	8-30
44 86 55	50.6	49.9	44.3	38.4	32.4	26.8	2.79	34.84	13.19	12.60	1336	9-30
44 86 56	76.2	75.3	65.6	57.6	49.5	40.5	3.18	35.83	13.66	12.60	1827	10-40

	permissible load [lbs x 1000]									L		weight [lbs]		load
type	1110	1130	1148	1166	1184	1200°F	d_3	d_N	E_R	min	max	min	max	group
48 86 51	16.6	14.6	13.0	11.2	9.7	8.5	1.81	11.0	11.02	64.96	96.46	592	938	5-8
48 86 52	20.0	19.6	17.3	15.3	13.3	11.5	1.81	11.0	11.81	64.96	96.46	675	1069	5-8
48 86 53	27.4	25.2	22.5	19.8	17.1	14.8	2.00	11.0	12.99	64.96	96.46	796	1268	6-9
48 86 54	38.4	35.3	31.2	27.2	23.6	20.7	2.00	11.0	13.78	64.96	96.46	969	1527	6-9
48 86 55	57.6	55.3	49.0	42.9	37.1	32.6	2.40	11.0	13.78	64.96	96.46	1245	1966	7-10
48 86 56	91.9	87.0	77.1	67.7	58.7	51.5	2.79	11.0	17.72	64.96	96.46	1757	2712	8-30
48 86 57	138.7	129.3	114.7	99.8	86.6	76.0	2.79	11.0	17.72	64.96	96.46	2174	3401	9-30

Pipe clamps, OD 36" [914.4mm] (ND 900/36"), type 44, 48

	permissible load [lbs x 1000]								max	max.	weight	load
type	1110	1130	1148	1166	1184	1200°F	d_3	E	B	insul.	[lbs]	group
44 91 51	18.2	17.8	16.2	14.2	12.1	10.1	2.00	34.25	12.01	12.60	697	6-9
44 91 52	26.1	25.4	22.3	19.3	16.2	13.5	2.40	35.24	11.54	12.60	853	7-10
44 91 53	36.9	36.4	33.3	28.8	24.1	20.2	2.79	35.63	10.04	12.60	1110	8-30
44 91 54	37.3	36.9	36.6	34.8	29.2	24.5	2.79	36.02	12.28	12.60	1292	8-30
44 91 55	50.6	49.9	46.8	40.2	33.9	28.3	2.79	35.83	14.17	12.60	1452	9-30
44 91 56	74.2	73.7	66.1	58.0	49.7	40.5	3.18	36.81	14.06	12.60	1925	10-40

	permissible load [lbs x 1000]									L		weight [lbs]		load
type	1110	1130	1148	1166	1184	1200°F	d_3	d_N	E_R	min	max	min	max	group
48 91 51	18.2	16.0	14.2	12.4	10.8	9.4	1.81	11.0	11.81	66.93	98.43	648	1010	5-8
48 91 52	27.2	24.3	21.6	18.9	16.4	14.4	1.81	11.0	12.99	66.93	98.43	818	1285	5-8
48 91 53	36.6	32.4	28.8	25.0	21.6	18.9	2.00	11.0	13.78	66.93	98.43	978	1516	6-9
48 91 54	62.5	56.7	50.1	44.3	38.4	33.7	2.40	11.0	15.16	66.93	98.43	1337	2134	7-10
48 91 55	88.3	82.3	72.8	63.6	55.1	48.3	2.79	11.0	18.50	70.87	98.43	1876	2741	8-30
48 91 56	106.3	97.1	86.1	75.1	65.2	57.1	2.79	11.0	17.72	70.87	98.43	2025	2981	9-30
48 91 57	154.0	145.2	128.8	112.6	97.6	85.4	3.18	11.0	17.72	70.87	98.43	2532	3764	10-40

Pipe clamps, OD 38" [965.2mm] (ND 950/38"), type 44, 48

	permissible load [lbs x 1000]								max	max.	weight	load
type	1110	1130	1148	1166	1184	1200°F	d_3	E	B	insul.	[lbs]	group
44 97 51	17.3	16.9	14.6	12.8	11.0	9.2	2.00	35.24	11.30	12.60	696	6-9
44 97 52	24.7	24.5	21.8	19.1	16.4	13.5	2.40	36.22	9.84	12.60	845	7-10
44 97 53	36.0	35.3	31.2	27.2	22.9	19.1	2.79	36.61	9.84	12.60	1136	8-30
44 97 54	41.4	40.7	36.2	31.7	27.2	22.5	2.79	37.01	11.65	12.60	1305	8-30
44 97 55	49.0	48.8	42.9	37.5	32.1	26.8	2.79	36.81	13.78	12.60	1548	9-30
44 97 56	74.6	74.2	65.4	57.3	49.5	40.5	3.18	37.80	14.17	12.60	2003	10-40

	permissible load [lbs x 1000]									L		weight [lbs]		load
type	1110	1130	1148	1166	1184	1200°F	d_3	d_N	E_R	min	max	min	max	group
48 97 51	18.2	18.0	16.0	13.9	11.9	10.6	1.81	13.0	11.81	68.90	100.39	752	1234	5-8
48 97 52	28.6	28.3	25.0	22.0	19.1	16.6	1.81	13.0	12.99	68.90	100.39	968	1489	5-8
48 97 53	37.3	33.0	29.2	25.6	22.0	19.3	2.00	13.0	13.78	68.90	100.39	1076	1644	6-9
48 97 54	65.0	57.3	50.8	44.3	38.4	33.7	2.40	13.0	15.16	68.90	100.39	1482	2280	7-10
48 97 55	89.5	83.9	74.2	64.7	56.2	49.2	2.79	13.0	18.50	72.83	100.39	2009	2934	8-30
48 97 56	105.2	99.8	88.3	77.1	66.8	58.7	2.79	13.0	17.72	72.83	100.39	2170	3192	9-30
48 97 57	161.4	149.5	132.6	116.0	100.5	88.1	3.18	13.0	17.72	72.83	100.39	2775	4107	10-40

Selection table OD 40" - 44" Temperatures 1110-1200°F

Pipe clamps, OD 40" [1016mm] (ND 1000/40"), type 44, 48

	permissible load [lbs x 1000]								max	max.	weight	load
type	1110	1130	1148	1166	1184	1200°F	d_3	E	B	insul.	[lbs]	group
44 T0 51	16.4	16.2	14.6	12.8	11.0	9.0	2.00	36.22	11.42	12.60	729	6-9
44 T0 52	25.6	25.0	21.6	19.1	16.4	13.5	2.40	37.40	10.04	12.60	899	7-10
44 T0 53	36.9	35.7	31.0	27.2	22.9	19.1	2.79	37.80	10.04	12.60	1206	8-30
44 T0 54	43.4	42.0	36.4	31.9	27.0	22.5	2.79	38.19	11.93	12.60	1385	8-30
44 T0 55	52.6	50.1	43.4	38.2	32.8	26.8	2.79	38.19	13.39	12.60	1542	9-30
44 T0 56	74.0	73.5	64.7	56.7	48.8	40.5	3.18	38.98	14.37	12.60	2107	10-40
44 T0 57	94.9	94.2	86.6	76.0	65.2	54.0	3.58	39.37	14.57	12.60	2638	20-50

	permissible load [lbs x 1000]									L		weight [lbs]		load
type	1110	1130	1148	1166	1184	1200°F	d_3	d_N	E_R	min	max	min	max	group
48 T0 51	22.5	20.0	17.8	15.3	13.3	11.7	1.81	13.0	11.81	70.87	102.36	851	1321	5-8
48 T0 52	34.8	30.8	27.2	23.8	20.7	18.0	1.81	13.0	12.99	70.87	102.36	1082	1638	5-8
48 T0 53	38.4	35.7	31.7	27.9	24.1	21.1	2.00	13.0	13.78	70.87	102.36	1160	1771	6-9
48 T0 54	67.7	62.9	55.8	48.6	42.0	36.9	2.40	13.0	15.16	70.87	102.36	1622	2481	7-10
48 T0 55	95.8	92.2	81.6	71.7	62.0	54.4	2.79	13.0	18.50	74.80	102.36	2193	3185	8-30
48 T0 56	114.7	109.3	96.9	84.5	73.3	64.3	2.79	13.0	17.72	74.80	102.36	2367	3458	9-30
48 T0 57	172.2	165.2	146.6	128.1	111.1	97.3	3.18	13.0	17.72	74.80	102.36	3186	4587	10-40

Pipe clamps, OD 42" [1067mm] (ND 1050/42"), type 44, 48

	permissible load [lbs x 1000]								max	max.	weight	load
type	1110	1130	1148	1166	1184	1200°F	d_3	E	B	insul.	[lbs]	group
44 T1 51	16.9	16.6	14.4	12.6	10.8	9.0	2.00	37.40	11.61	12.60	775	6-9
44 T1 52	25.6	25.4	21.8	19.1	16.4	13.5	2.40	38.58	10.43	12.60	953	7-10
44 T1 53	36.9	36.0	31.5	27.2	22.9	19.1	2.79	38.78	10.28	12.60	1272	8-30
44 T1 54	44.1	41.6	36.0	31.7	27.0	22.5	2.79	39.37	12.28	12.60	1470	8-30
44 T1 55	53.3	50.4	43.6	38.2	32.4	26.8	2.79	39.37	13.78	12.60	1615	9-30
44 T1 56	76.0	75.3	65.6	57.6	49.5	40.5	3.18	40.16	15.04	12.60	2248	10-40
44 T1 57	96.0	94.6	87.9	77.1	65.2	54.0	3.58	40.55	15.16	12.60	2774	20-50

	permissible load [lbs x 1000]									L		weight [lbs]		load
type	1110	1130	1148	1166	1184	1200°F	d_3	d_N	E_R	min	max	min	max	group
48 T1 51	22.3	19.6	17.3	15.3	13.3	11.5	1.81	13.0	11.81	72.83	104.33	883	1352	5-8
48 T1 52	33.9	31.2	27.7	24.1	20.9	18.2	1.81	13.0	12.99	72.83	104.33	1133	1706	5-8
48 T1 53	36.6	36.2	32.1	28.1	24.3	21.4	2.00	13.0	13.78	72.83	104.33	1218	1834	6-9
48 T1 54	63.4	62.9	55.8	49.0	42.3	37.1	2.40	13.0	15.16	72.83	104.33	1693	2561	7-10
48 T1 55	96.7	91.5	81.2	70.8	61.4	53.7	2.79	13.0	18.50	76.77	104.33	2276	3282	8-30
48 T1 56	116.0	108.8	96.4	84.3	73.1	64.1	2.79	13.0	17.72	76.77	104.33	2462	3573	9-30
48 T1 57	172.2	164.8	146.1	127.2	110.4	96.7	3.18	13.0	17.72	76.77	104.33	3329	4738	10-40

Pipe clamps, OD 44" [1118mm] (ND 1100/44"), type 44, 48

	permissible load [lbs x 1000]								max	max.	weight	load
type	1110	1130	1148	1166	1184	1200°F	d_3	E	B	insul.	[lbs]	group
44 T2 51	17.1	16.4	14.2	12.4	10.8	9.0	2.00	38.58	11.81	12.60	815	6-9
44 T2 52	24.7	24.3	21.4	18.7	16.0	13.5	2.40	39.76	10.43	12.60	1006	7-10
44 T2 53	36.9	35.3	30.6	27.0	22.9	19.1	2.79	39.96	10.55	12.60	1341	8-30
44 T2 54	45.0	40.9	35.5	31.0	26.8	22.5	2.79	40.16	12.52	12.60	1562	8-30
44 T2 55	52.2	49.7	42.9	37.8	32.4	26.8	2.79	40.55	13.98	12.60	1693	9-30
44 T2 56	72.8	72.6	65.6	57.6	49.5	40.5	3.18	41.34	15.43	12.60	2362	10-40
44 T2 57	96.0	94.6	86.6	75.8	65.2	54.0	3.58	41.93	15.35	12.60	2925	20-50

	permissible load [lbs x 1000]									L		weight [lbs]		load
type	1110	1130	1148	1166	1184	1200°F	d_3	d_N ①	E_R	min	max	min	max	group
48 T2 51	22.3	19.6	17.3	15.3	13.0	11.5	1.81	14.75	11.81	74.80	106.30	1085	1461	5-8
48 T2 52	31.9	31.2	27.7	24.1	20.9	18.2	1.81	14.75	12.99	74.80	106.30	1228	1819	5-8
48 T2 53	40.7	36.2	32.1	28.1	24.3	21.4	2.00	14.75	13.78	74.80	106.30	1354	2010	6-9
48 T2 54	62.7	62.7	55.8	49.0	42.5	37.3	2.40	14.75	15.16	74.80	106.30	1821	2767	7-10
48 T2 55	97.3	91.7	81.2	70.8	61.4	54.0	2.79	14.75	18.50	78.74	106.30	2431	3468	8-30
48 T2 56	112.9	109.0	96.7	84.3	73.1	64.1	2.79	14.75	17.72	78.74	106.30	2633	3836	9-30
48 T2 57	172.2	164.3	145.7	127.5	110.6	96.9	3.18	14.75	17.72	78.74	106.30	3476	4974	10-40

type 44

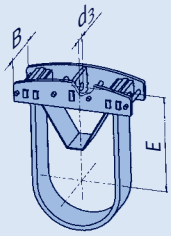

type 48

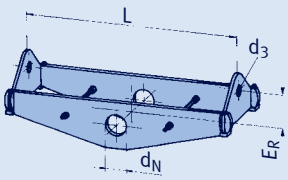

① For trunnion hole diameter 14.25 inch change last digit of type designation to a letter according to the table below. The weights may vary slightly.

change last digit	
from	to
48 T2 51	48 T2 5A
48 T2 52	48 T2 5B
48 T2 53	48 T2 5C
48 T2 54	48 T2 5D
48 T2 55	48 T2 5E
48 T2 56	48 T2 5F
48 T2 57	48 T2 5G

Selection table OD 46" - 48"
Temperatures 1110-1200°F

Pipe clamps, OD 46" [1168mm] (ND 1150/46"), type 44, 48

	permissible load [lbs x 1000]								max	max.	weight	load
type	1110	1130	1148	1166	1184	1200°F	d_3	E	B	insul.	[lbs]	group
44 T3 51	16.4	16.2	14.4	12.6	10.8	9.0	2.00	39.57	12.28	12.60	867	6-9
44 T3 52	27.0	25.2	21.8	19.1	16.4	13.5	2.40	40.35	10.83	12.60	1109	7-10
44 T3 53	36.9	35.1	30.6	26.8	22.9	19.1	2.79	41.14	10.79	12.60	1409	8-30
44 T3 54	44.1	41.4	36.0	31.5	27.0	22.5	2.79	41.14	12.91	12.60	1647	8-30
44 T3 55	54.2	49.0	42.5	37.3	31.9	26.8	2.79	41.73	14.17	12.60	1785	9-30
44 T3 56	73.7	73.3	64.3	56.4	48.3	40.5	3.18	42.32	15.43	12.60	2448	10-40
44 T3 57	96.0	94.6	85.7	75.1	64.5	54.0	3.58	43.11	15.55	12.60	3077	20-50

	permissible load [lbs x 1000]									L		weight [lbs]		load
type	1110	1130	1148	1166	1184	1200°F	d_3	d_N ①	E_R	min	max	min	max	group
48 T3 51	21.1	19.6	17.3	15.3	13.3	11.7	1.81	14.75	11.81	76.77	108.27	1117	1502	5-8
48 T3 52	31.2	31.2	27.7	24.3	20.9	18.4	1.81	14.75	12.99	76.77	108.27	1277	1911	5-8
48 T3 53	38.9	36.2	32.1	28.3	24.5	21.6	2.00	14.75	13.78	76.77	108.27	1413	2086	6-9
48 T3 54	62.7	62.5	55.8	48.6	42.0	36.9	2.40	14.75	15.16	76.77	108.27	1923	2858	7-10
48 T3 55	99.1	91.7	81.2	70.8	61.4	54.0	2.79	14.75	18.50	80.71	108.27	2526	3582	8-30
48 T3 56	114.7	109.3	96.9	84.5	73.3	64.3	2.79	14.75	17.72	80.71	108.27	2794	3971	9-30
48 T3 57	172.2	164.8	146.1	127.7	110.6	96.9	3.18	14.75	17.72	80.71	108.27	3624	5130	10-40

① For trunnion hole diameter 14.25 inch change last digit of type designation to a letter according to the table below. The weights may vary slightly.

type 44

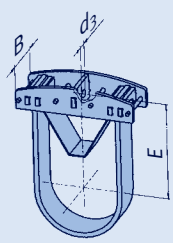

Pipe clamps, OD 48" [1219mm] (ND 1200/48"), type 44, 48

	permissible load [lbs x 1000]								max	max.	weight	load
type	1110	1130	1148	1166	1184	1200°F	d_3	E	B	insul.	[lbs]	group
44 T4 51	17.3	16.6	14.4	12.6	10.8	9.0	2.00	40.75	12.68	12.60	925	6-9
44 T4 52	26.1	25.2	21.8	19.1	16.4	13.5	2.40	41.34	11.02	12.60	1163	7-10
44 T4 53	36.9	35.5	30.8	27.0	22.9	19.1	2.79	42.52	11.18	12.60	1499	8-30
44 T4 54	44.3	41.8	36.2	31.7	27.2	22.5	2.79	42.32	13.19	12.60	1729	8-30
44 T4 55	53.1	49.2	42.7	37.3	32.1	26.8	2.79	42.91	14.57	12.60	1870	9-30
44 T4 56	75.8	73.1	63.2	55.5	47.7	40.5	3.18	43.70	15.94	12.60	2594	10-40
44 T4 57	96.0	94.6	85.7	75.1	64.5	54.0	3.58	44.29	15.94	12.60	3217	20-50

	permissible load [lbs x 1000]									L		weight [lbs]		load
type	1110	1130	1148	1166	1184	1200°F	d_3	d_N ②	E_R	min	max	min	max	group
48 T4 51	20.2	19.8	17.5	15.5	13.3	11.7	1.81	14.75	11.81	78.74	110.24	1150	1550	5-8
48 T4 52	31.2	31.2	27.7	24.3	20.9	18.4	1.81	14.75	12.99	78.74	110.24	1353	1969	5-8
48 T4 53	37.1	36.2	32.1	28.1	24.3	21.4	2.00	14.75	13.78	78.74	110.24	1466	2165	6-9
48 T4 54	63.4	62.9	55.8	48.6	42.3	36.9	2.40	14.75	15.16	78.74	110.24	2051	2998	7-10
48 T4 55	100.3	91.5	81.2	71.0	61.6	54.0	2.79	14.75	18.50	82.68	110.24	2641	3685	8-30
48 T4 56	117.6	109.0	96.7	84.3	73.1	64.1	2.79	14.75	17.72	82.68	110.24	2897	4095	9-30
48 T4 57	166.4	164.8	145.9	127.7	110.6	97.1	3.18	14.75	17.72	82.68	110.24	3761	5289	10-40

② For trunnion hole diameter 16.25 inch change last digit of type designation to a letter according to the table below. The weights may vary slightly.

type 48

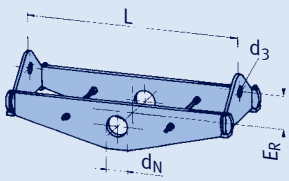

change last digit

from	to
48 T. 51	48 T. 5A
48 T. 52	48 T. 5B
48 T. 53	48 T. 5C
48 T. 54	48 T. 5D
48 T. 55	48 T. 5E
48 T. 56	48 T. 5F
48 T. 57	48 T. 5G

e.g. 48 T3 51 => 48 T3 5A

U-bolts
Type 40

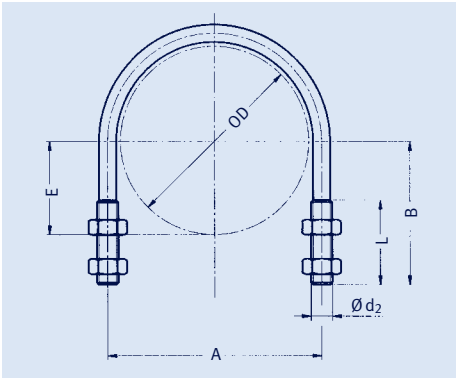

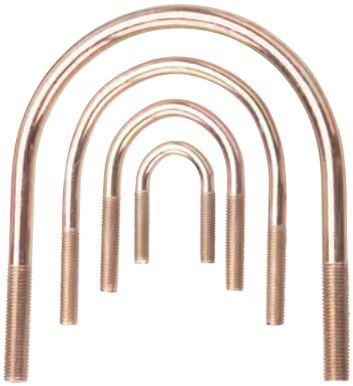

U-bolts
type 40 01 .8 to 40 91 .8

Type 40 mainly serves to fasten pipe systems to existing steel structures.

type	OD	A	B	d_2 x L	E	weight [lbs]
40 01 .8	0.84	1.19	2.75	1/4" UNC x 2.5	0.42	0.12
40 02 .8	1.06	1.38	2.75	1/4" UNC x 2.5	0.53	0.13
40 03 .8	1.33	1.63	2.75	1/4" UNC x 2.375	0.67	0.13
40 04 .8	1.67	2.06	2.88	3/8" UNC x 2.375	0.84	0.35
40 05 .8	1.90	2.38	3.00	3/8" UNC x 2.5	0.95	0.37
40 06 .8	2.37	2.81	3.25	3/8" UNC x 2.5	1.19	0.40
40 07 .8	2.87	3.44	3.75	1/2" UNC x 3	1.44	0.85
40 08 .8	3.00	3.56	3.75	1/2" UNC x 3	1.50	0.89
40 09 .8	3.50	4.06	4.00	1/2" UNC x 3	1.75	0.92
40 10 .8	4.25	4.88	4.50	1/2" UNC x 3	2.13	1.00
40 11 .8	4.50	5.06	4.50	1/2" UNC x 3	2.25	1.03
40 14 .8	5.50	6.13	5.00	1/2" UNC x 3	2.75	1.15
40 17 .8	6.63	7.38	6.13	5/8" UNC x 3.75	3.32	2.18
40 22 .8	8.63	9.38	7.13	5/8" UNC x 3.75	4.32	2.54
40 27 .8	10.75	11.63	8.38	3/4" UNC x 4	5.38	4.44
40 32 .8	12.75	13.75	9.63	7/8" UNC x 4.25	6.38	5.05
40 36 .8	14.00	15.00	10.25	7/8" UNC x 4.25	7.00	5.38
40 41 .8	16.00	17.00	11.25	7/8" UNC x 4.25	8.00	5.91
40 46 .8	18.00	19.13	12.63	1" UNC x 4.75	9.00	12.10
40 51 .8	20.00	21.13	13.63	1" UNC x 4.75	10.00	13.10
41 56 .8	22.00	23.13	14.63	1" UNC x 4.75	11.00	14.60
40 61 .8	24.00	25.13	15.63	1" UNC x 4.75	12.00	15.00
41 66 .8	26.00	27.13	16.63	1" UNC x 4.75	13.00	16.88
40 71 .8	28.00	29.13	17.63	1" UNC x 4.75	14.00	16.90
40 76 .8	30.00	31.13	18.63	1" UNC x 4.75	15.00	17.90
40 81 .8	32.00	33.13	19.63	1" UNC x 4.75	16.00	20.30
40 86 .8	34.00	35.13	20.63	1" UNC x 4.75	17.00	20.50
40 91 .8	36.00	37.13	21.63	1" UNC x 4.75	18.00	20.70

→ 5th digit: 2 = carbon steel
4 = stainless steel

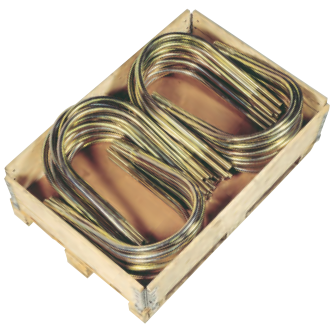

Order details:
U-bolt
type 40 .. .8

Scope of delivery:
incl. 4 nuts

Weld-on lugs for pipes Type 41

Weld-on lugs for pipes type 41 D9 11 to 41 79 12

① Permissible load at 176°F [80°C] = normal operating conditions (load case H / level A/B) of the corresponding load group (3rd digit in the type designation, see "Max. permissible load for static components", page 0.6).

Existing stress in the specified weld seam <7.25 ksi [<50 N/mm²] at 4° load angle.

Material: carbon steel

type 41 .. 11 s_{max} = 0.39 inch
type 41 .. 12 s_{max} = 3.94 inch

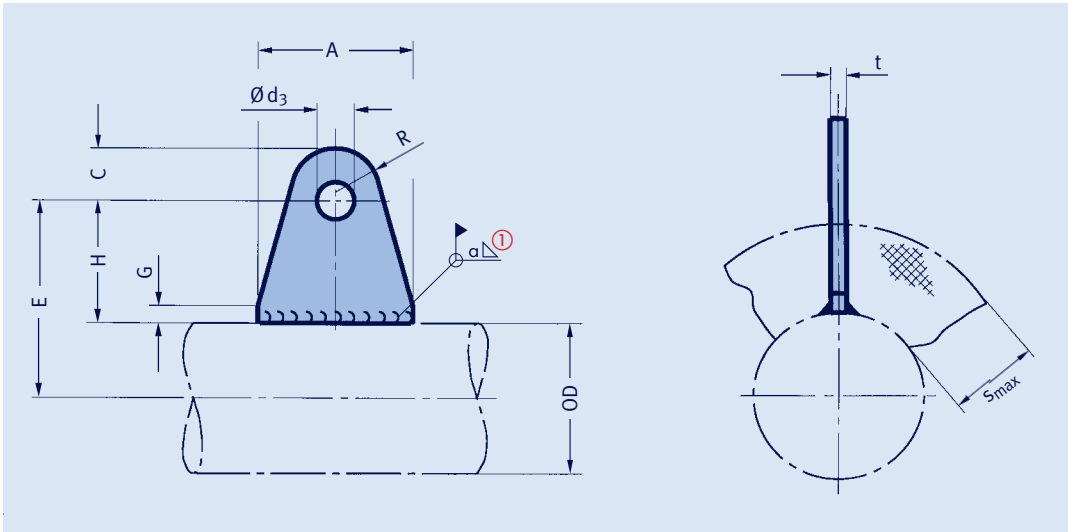

type	A	Ø d_3	H	R	C	G	t	a ① (leg length)	weight [lbs]
41 D9 11	1.18	0.41	0.98	0.59	0.59	0.39	5/16	3/16	0.14
41 D9 12	1.18	0.41	4.53	0.59	0.59	0.39	5/16	3/16	0.50
41 29 11	1.38	0.50	0.98	0.69	0.87	0.39	3/8	3/16	0.24
41 29 12	2.56	0.50	4.53	0.69	0.87	0.39	3/8	3/16	1.08
41 39 11	1.77	0.65	1.18	0.89	1.10	0.39	1/2	1/4	0.46
41 39 12	2.76	0.65	4.72	0.89	1.10	0.39	1/2	1/4	1.66
41 49 11	3.15	0.81	1.57	1.18	1.46	0.39	5/8	1/4	1.16
41 49 12	4.72	0.81	4.92	1.18	1.46	0.39	5/8	1/4	3.52
41 59 11	3.35	1.00	1.57	1.28	1.57	0.39	3/4	5/16	1.66
41 59 12	5.12	1.00	5.12	1.28	1.57	0.39	3/4	5/16	5.10
41 69 11	4.72	1.34	1.97	1.57	1.97	0.39	1	3/8	3.52
41 69 12	6.50	1.34	5.51	1.57	1.97	0.39	1	3/8	9.10
41 79 11	6.69	1.60	2.36	1.97	2.56	0.39	1 1/4	3/8	7.10
41 79 12	9.06	1.60	5.91	1.97	2.56	0.39	1 1/4	3/8	16.10

Reduction factors of permissible load at increased temperatures:

T	F perm. (T)
480°F [250°C]	0.7 F perm. (176°F)
660°F [350°C]	0.5 F perm. (176°F)

Order details:
weld-on lug for pipes
type 41 .9 1.

Weld-on lugs for pipe elbows Type 41

S_{max} = 0.39inch [10mm] type	E	a (leg length)	weight [lbs]	S_{max} = 3.94inch [100mm] type	E	a (leg length)	weight [lbs]	OD	load group ①	C	R_1	t	d_3
41 06 13	1.38	3/16	0.26	41 06 15	5.31	3/16	0.92	2.37	C-2	0.87	0.69	5/16	0.50
41 07 13	1.18	3/16	0.24	41 07 15	5.31	3/16	0.90	2.87	C-2	0.87	0.69	5/16	0.50
41 08 13	1.38	3/16	0.24	41 08 15	5.31	3/16	0.90	3.00	C-2	0.87	0.69	5/16	0.50
41 09 13	1.18	3/16	0.24	41 09 15	5.31	3/16	0.90	3.50	C-2	0.87	0.69	5/16	0.50
41 09 14	1.38	3/16	0.46	41 09 16	5.51	1/4	1.46	3.50	2-3	1.10	0.89	3/8	0.65
41 10 13	1.18	3/16	0.24	41 10 15	5.31	3/16	0.94	4.25	C-2	0.87	0.69	5/16	0.50
41 10 14	1.38	3/16	0.46	41 10 16	5.51	1/4	1.52	4.25	2-3	1.10	0.89	3/8	0.65
41 11 13	1.18	3/16	0.24	41 11 15	5.31	3/16	0.92	4.50	C-2	0.87	0.69	5/16	0.50
41 11 14	1.38	3/16	0.46	41 11 16	5.51	1/4	1.46	4.50	2-3	1.10	0.89	3/8	0.65
41 13 13	0.98	3/16	0.24	41 13 15	5.31	3/16	0.98	5.25	C-2	0.87	0.69	5/16	0.50
41 13 14	1.18	3/16	0.46	41 13 16	5.51	1/4	1.52	5.25	2-3	1.10	0.89	3/8	0.65
41 14 13	0.98	3/16	0.24	41 14 15	5.31	3/16	0.94	5.50	C-2	0.87	0.69	5/16	0.50
41 14 14	1.57	1/4	1.24	41 14 16	5.71	1/4	3.60	5.50	3-4	1.46	1.18	5/8	0.81
41 16 13	0.98	3/16	0.24	41 16 15	5.31	3/16	0.98	6.25	C-2	0.87	0.69	5/16	0.50
41 16 14	1.57	1/4	1.26	41 16 16	5.71	1/4	3.80	6.25	3-4	1.46	1.18	5/8	0.81
41 17 13	0.98	3/16	0.44	41 17 15	5.51	1/4	1.50	6.63	2-3	1.10	0.89	3/8	0.65
41 17 14	1.57	5/16	1.72	41 17 16	5.91	5/16	4.60	6.63	4-5	1.57	1.28	3/4	0.97
41 19 13	0.79	3/16	0.46	41 19 15	5.31	1/4	1.54	7.63	2-3	1.10	0.89	3/8	0.65
41 19 14	1.38	5/16	1.74	41 19 16	5.71	5/16	4.80	7.63	4-5	1.57	1.28	3/4	0.97
41 22 13	0.79	3/16	0.44	41 22 15	5.31	1/4	1.52	8.63	2-3	1.10	0.89	3/8	0.65
41 22 14	1.38	5/16	1.70	41 22 16	5.71	5/16	4.80	8.63	4-5	1.57	1.28	3/4	0.97
41 24 13	0.59	3/16	0.44	41 24 15	5.12	1/4	1.56	9.63	2-3	1.10	0.89	3/8	0.65
41 24 14	1.18	5/16	1.72	41 24 16	5.71	5/16	4.80	9.63	4-5	1.57	1.28	3/4	0.97
41 26 13	0.39	3/16	0.46	41 26 15	4.92	1/4	1.56	10.50	2-3	1.10	0.89	3/8	0.65
41 26 14	0.98	5/16	1.72	41 26 16	5.51	5/16	4.80	10.50	4-5	1.57	1.28	3/4	0.97
41 27 13	0.59	3/16	0.44	41 27 15	5.12	1/4	1.54	10.75	2-3	1.10	0.89	3/8	0.65
41 27 14	0.98	5/16	1.68	41 27 16	5.71	5/16	4.80	10.75	4-5	1.57	1.28	3/4	0.97
41 32 13	0.59	1/4	1.20	41 32 15	5.12	1/4	3.60	12.75	3-4	1.46	1.18	5/8	0.81
41 32 14	0.98	3/8	2.60	41 32 16	5.71	3/8	7.20	12.75	5-6	1.97	1.57	3/4	1.34
41 36 13	-0.39	1/4	1.22	41 36 15	4.53	1/4	3.80	14.00	3-4	1.46	1.18	5/8	0.81
41 36 14	0.20	3/8	2.60	41 36 16	4.92	3/8	7.20	14.00	5-6	1.97	1.57	3/4	1.34
41 37 13	0.00	1/4	1.22	41 37 15	4.72	1/4	3.80	14.50	3-4	1.46	1.18	5/8	0.81
41 37 14	0.59	3/8	2.60	41 37 16	5.12	3/8	7.20	14.50	5-6	1.97	1.57	3/4	1.34
41 41 13	-0.59	1/4	1.22	41 41 15	4.13	1/4	3.80	16.00	3-4	1.46	1.18	5/8	0.81
41 41 14	-0.20	3/8	2.60	41 41 16	4.53	3/8	7.20	16.00	5-6	1.97	1.57	3/4	1.34
41 42 13	-0.39	1/4	1.22	41 42 15	4.53	1/4	3.80	16.50	3-4	1.46	1.18	5/8	0.81
41 42 14	0.20	3/8	2.60	41 42 16	4.92	3/8	7.20	16.50	5-6	1.97	1.57	3/4	1.34
41 46 13	-0.79	5/16	1.70	41 46 15	3.94	5/16	4.80	18.00	4-5	1.57	1.28	3/4	0.97
41 46 14	0.00	3/8	6.80	41 46 16	4.72	3/8	14.80	18.00	6-7	2.56	1.97	1	1.62
41 51 13	-1.18	5/16	1.70	41 51 15	3.74	5/16	5.00	20.00	4-5	1.57	1.28	3/4	0.97
41 51 14	-0.39	3/8	6.80	41 51 16	4.33	3/8	14.80	20.00	6-7	2.56	1.97	1	1.62
41 56 13	-1.57	5/16	1.68	41 56 15	3.35	5/16	5.00	22.00	4-5	1.57	1.28	3/4	0.97
41 56 14	-0.79	3/8	6.60	41 56 16	4.13	3/8	14.80	22.00	6-7	2.56	1.97	1	1.62
41 61 13	-1.77	5/16	1.68	41 61 15	3.15	5/16	5.00	24.00	4-5	1.57	1.28	3/4	0.97
41 61 14	-1.18	3/8	6.60	41 61 16	3.74	3/8	14.60	24.00	6-7	2.56	1.97	1	1.62
41 66 13	-2.17	5/16	1.68	41 66 15	2.76	5/16	5.00	26.00	4-5	1.57	1.28	3/4	0.97
41 66 14	-1.38	3/8	6.60	41 66 16	3.35	3/8	14.60	26.00	6-7	2.56	1.97	1	1.62
41 71 13	-2.56	5/16	1.68	41 71 15	2.36	5/16	5.00	28.00	4-5	1.57	1.28	3/4	0.97
41 71 14	-1.77	3/8	6.40	41 71 16	3.15	3/8	14.60	28.00	6-7	2.56	1.97	1	1.62
41 76 13	-2.95	5/16	1.68	41 76 15	1.97	5/16	5.00	30.00	4-5	1.57	1.28	3/4	0.97
41 76 14	-2.17	3/8	6.40	41 76 16	2.76	3/8	14.60	30.00	6-7	2.56	1.97	1	1.62

① Permissible loads at 176°F [80°C] = normal operating conditions (load case H / level A/B) of the specifie load group in each case (see "Max. permissible load for static components", page 0.6).

Stress existing in the specified weld seam <7.25 ksi [<50 N/mm²] at 4° load angle.

Weld-on lugs for pipe elbows (R = 1.5NPS) type 41 06 13 to 41 76 16

Material: carbon steel

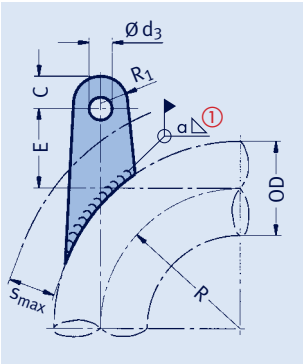

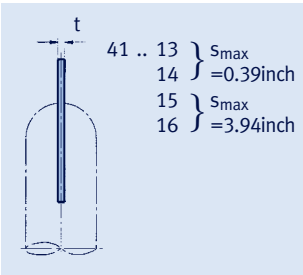

Reduction factors of permissible load at increased temperatures:

T	F perm. (T)
480°F [250°C]	0.7 F perm. (176°F)
660°F [350°C]	0.5 F perm. (176°F)

Order details:
weld-on lug for pipe elbows R = 1.5NPS type 41 .. 1.

Connection plates Type 77

Connection plates for coupling pipe clamps type 43

type 77 09 39 to 77 19 39

By coupling 2 pipe clamps with type 77 the loads can be doubled.

Order details:
connection plate
type 77.. 39

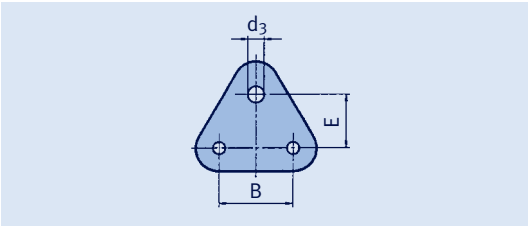

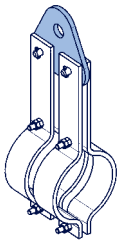

type	for clamps	load group	d_3	E	B	weight [lbs]
77 09 39	43 01 19 up to 43 09 59	D-5	1.00	2.56	3.54	1.8
77 17 39	43 10 19 up to 43 17 59	3-6	1.34	2.76	3.54	2.6
77 19 39	43 19 19 up to 43 19 59	4-7	1.81	3.54	4.13	5.3

Connection plates for coupling pipe clamp type 44 up to 1110°F [600°C]

type 77 22 .. to 77 T4 ..

Type designation of the connection plates: the figures 44 of the clamps to be coupled must be replaced by the figures 77.

Example:
connection plate for
type 44 66 38 → 77 66 38.

① The load group for the upper connection (type 60) must be stated when ordering.

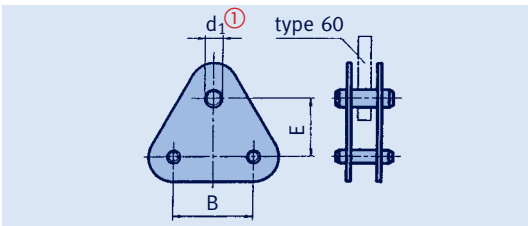

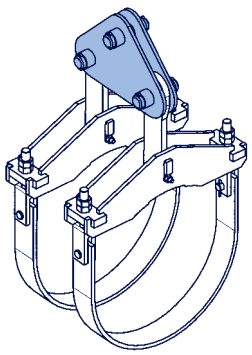

type	load group ①	d_1 ① min	d_1 ① max	E	Bmax	weight [lbs]
77 22 .. up to 77 27 ..	5-10	1.30	2.37	5.31	7.09	22-51
77 32 .. up to 77 37 ..	5-30	1.30	2.76	5.51	8.86	27-70
77 41 .. up to 77 46 ..	6-30	1.58	2.76	5.51	10.63	35-115
77 51 .. up to 77 56 ..	7-50	1.78	3.55	7.87	11.81	66-165
77 61 .. up to 77 91 ..	7-50	1.78	3.55	7.48	12.80	68-172
77 97 .. up to 77 T4 ..	7-50	1.78	3.55	7.48	15.34	103-178

Order details:
connection plate
type 77.. ..
load group ...

Lift-off restraints for clamp bases Type 49

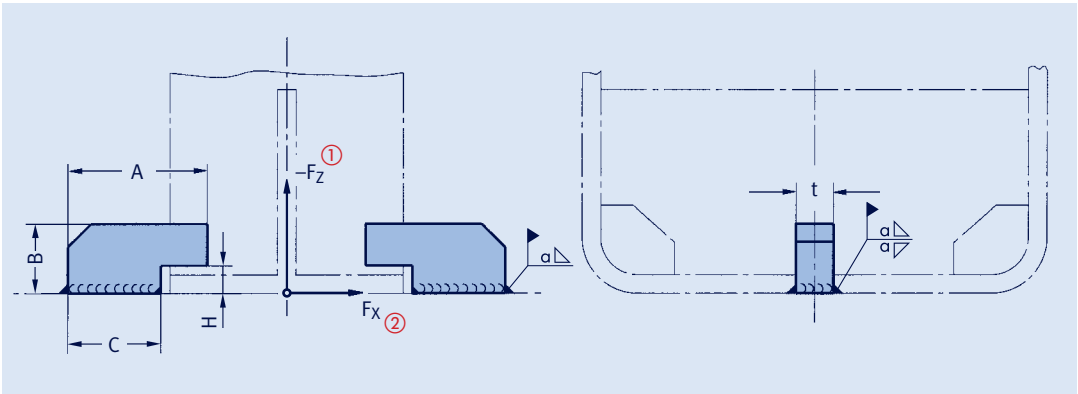

Lift-off restraints for clamp base type 49 type 49 00 01 to 49 00 05

Material: carbon steel

type	for clamp bases	A	B	C	H	t	max. load F_X [lbs] ②	a (leg length)	wt./pair [lbs]
49 00 01	49 01 11 up to 49 17 11	1.38	0.59	0.91	0.31	5/16	1349	3/16	0.2
49 00 01	49 01 12 up to 49 14 12	1.38	0.59	0.91	0.31	5/16	1349	3/16	0.2
49 00 01	49 01 25 up to 49 11 25	1.38	0.59	0.91	0.31	5/16	1349	3/16	0.2
49 00 01	49 01 35 up to 49 06 35	1.38	0.59	0.91	0.31	5/16	1349	3/16	0.2
49 00 01	49 01 45 up to 49 11 45	1.38	0.59	0.91	0.31	5/16	1349	3/16	0.2
49 00 01	49 01 55 up to 49 09 55	1.38	0.59	0.91	0.31	5/16	1349	3/16	0.2
49 00 02	49 19 13 up to 49 32 13	2.17	1.26	1.38	0.67	1/2	2698	1/4	0.7
49 00 02	49 16 14 up to 49 32 14	2.17	1.26	1.38	0.67	1/2	2698	1/4	0.7
49 00 02	49 13 25 up to 49 32 25	2.17	1.26	1.38	0.67	1/2	2698	1/4	0.7
49 00 02	49 07 35 up to 49 32 35	2.17	1.26	1.38	0.67	1/2	2698	1/4	0.7
49 00 02	49 13 45 up to 49 32 45	2.17	1.26	1.38	0.67	1/2	2698	1/4	0.7
49 00 03	49 36 13 up to 49 51 45	3.15	1.77	2.17	0.87	5/8	5620	5/16	1.5
49 00 04	49 56 13 up to 49 91 45	4.33	1.97	3.15	0.87	1	11240	7/16	4.0
49 00 05	49 97 13 up to 49 T4 45	4.53	1.97	3.35	0.87	1 1/4	13489	1/2	5.4

① The following short duration lift-off loads are permissible for the clamp bases:
type 49 01 .. to 49 76 .. 10%
type 49 81 .. to 49 T4 .. 7%
of the catalog load.

② When used as a guide it must be ensured that the pipe supports are secured against rotation about the pipe axis. F_X is the max. lateral load at a weld seam stress of 7.25 ksi [50 N/mm²] in the load case H (level A/B). Simultaneous lift-off loads are taken into consideration.

On request special lift-off restraints for type 49 .. .. -SP can be delivered.

Order details:
lift-off restraint
type 49 00 ..

Installation and operating instructions Type 42, 43, 44, 45, 46, 48

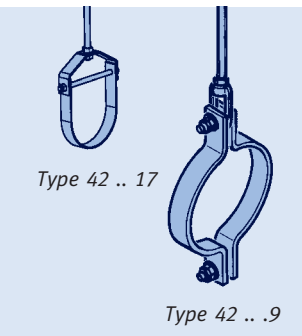

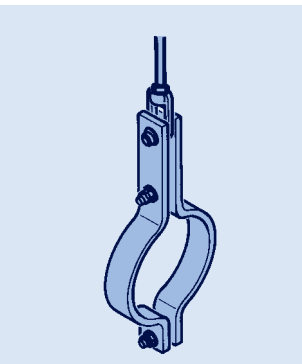

Type 43

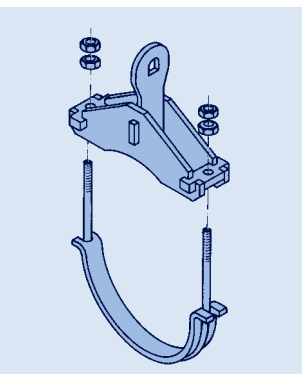

Type 44 U-bolt design

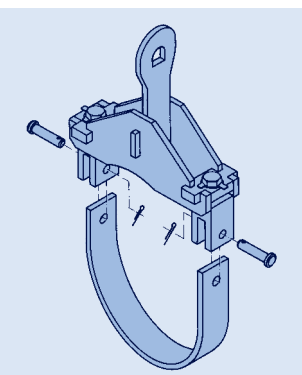

Type 44 strap design

1 Transport and storage

Care must be taken during transport that none of the clamp components are damaged. When stored in the open the clamps must be protected from dirt and water.

2 Delivery condition

LISEGA pipe clamps are delivered ready for installation, with all the necessary bolts. For reason of more optimize dispatch clamps can be supplied partially assembled.

3 Installation

3.1 Horizontal clamp

Type 42

This clamp is used as a horizontal clamp in connection with threaded eye nut type 60. When tightening the bolts, care must be taken that the clamp halves are parallel to each other. The bolts are to be secured with lock nuts.

Type 43

Connection is made with this horizontal clamp via a separate connection pin with a threaded eye nut type 60. The pins must be secured with the cotter pins provided; otherwise proceed as with type 42.

Type 44 U-bolt/ strap for temperatures up to 1110°F [600°C]

These clamps consist of an upper section with a connecting lug and, depending on load and temperature range, a U-bolt with an inlay plate or a flat steel strap as lower section. For installation, remove the pre-assembled lower part by loosening the locking nuts or removing the connection pins. The upper section is seated on the piping and the lower one inserted and held by bolting the U-bolt or gib the flat steel strap. After alignment of the clamp the bolts are to be firmly tightened. The U-bolts are secured with lock nuts and the flat steel straps with tab washers under the hexagon nuts.

Type 44 for temperatures over 1110°F [600°C]

These clamps consist of an upper section with a connection lug and restrainer and a flat steel strap as lower part.

For installation the restraint and strap must be taken off by removing the outer threaded rods and the connection pins. After attaching the upper section to the hanging part the restraint and strap can be reconnected.

Afterwards they are pinned and the threaded rods are fitted. All parts must then be firml secured.

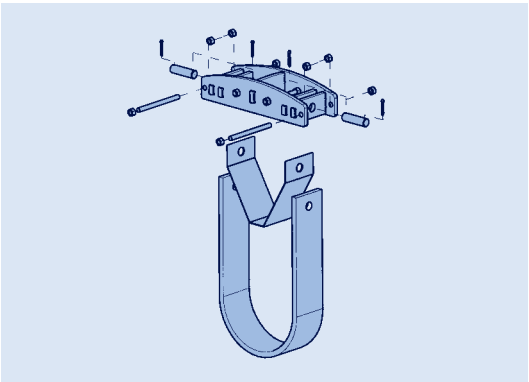

Installation of type 44 for temperatures over 1110°F [600°C]

3.2 Riser clamps

Type 45

When installing these clamps care must be taken to place the spacers supplied onto the bolts between the clamp halves. The bolts are then tightened and locked. The clamp is hung up via the outer support pins, which are secured with washers and cotter pins. The specified height of the clamp is set by tightening the suspended parts and creating a force-and form-fitting connection with the shear lugs.

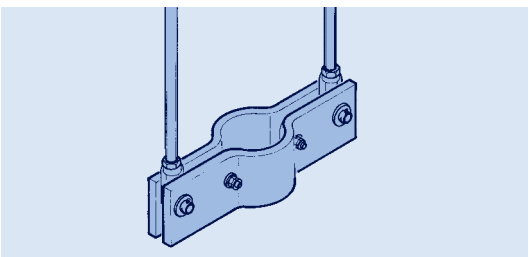

Riser clamp type 45 with connection components

Type 46
This riser clamp is supplied in single parts sealed in plastic shrink wrap.

For installation it is best to first fit the fron plates ① into the suspended parts. These parts should be tightened at the lowest level, then both side plates ② can be attached one after another. In the case of large clamps, the opposite side must hereby be temporarily propped up.

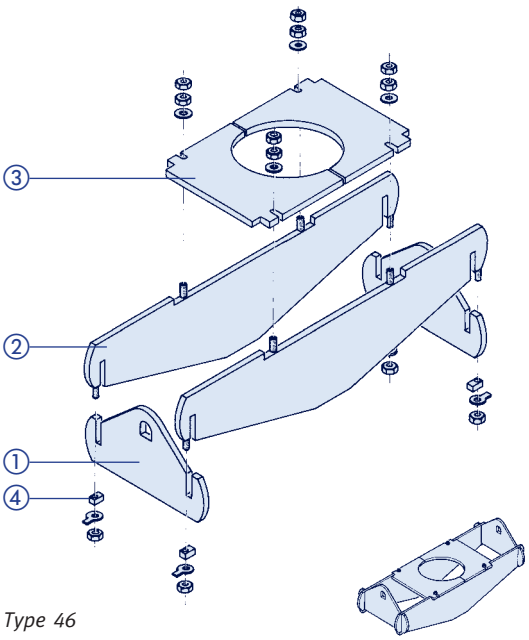

Type 46

After that, the top plates ③ for the shear lugs are inserted and bolted on. The connection points between front and side plates are secured by aligning and firmly tightening the pre-assembled locking plates ④.

The specified height is set by tightening the suspended parts, creating a force- and form-fitting connection with the shear lugs.

Type 48
This riser clamp is supplied in single parts sealed in shrink wrap. First of all, a side plate ⑤ should be prepared by attaching the threaded rods ⑦.

For installation, both side plates are seated on the trunnions and connected with the threaded rods. The nuts should be only loosely tightened here. For large clamps the components should be temporarily propped up.

The front plates ⑥ can now be pushed from below into the intake slots and connected to the suspended parts. The connection points between front and side plates are made by aligning and firmly tightening the pre-assembled locking plates ⑧. The specified height of the clamp is set by tightening the suspended parts, creating a force- and form-fittin connection with the trunnions.

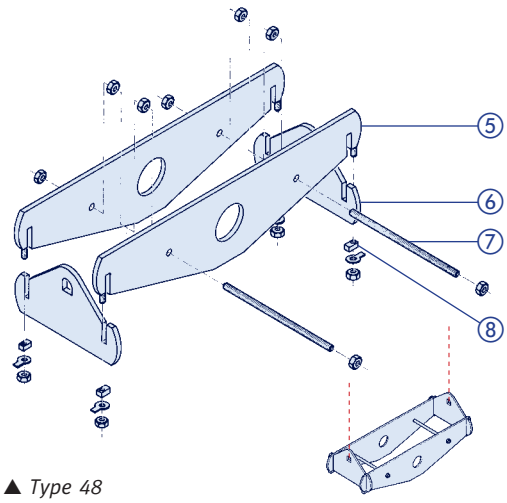

▲ *Type 48*

4 Inspection and maintenance

The horizontal clamp functions flawlessly in any operating condition if the secured boltings are free of any play. Under normal operating conditions maintenance is not required.

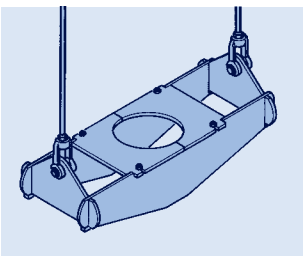

Riser clamp type 46 with connection components

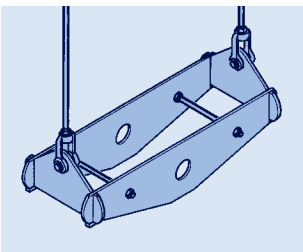

Riser clamp type 48 with connection components

Installation and operating instructions Type 49

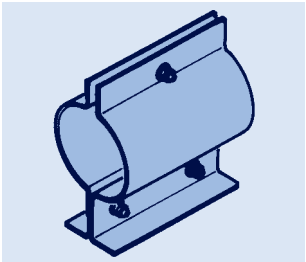

Clamp bases for smaller pipe diameters type 49 .. .1, 49 .. .2 up to ND6" [150]

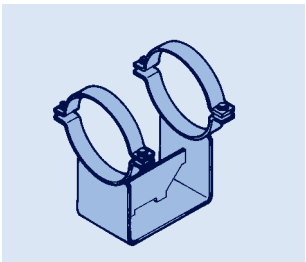

Clamp bases for medium and high temperatures type 49 .. .3, 49 .. .4, 49 .. .5

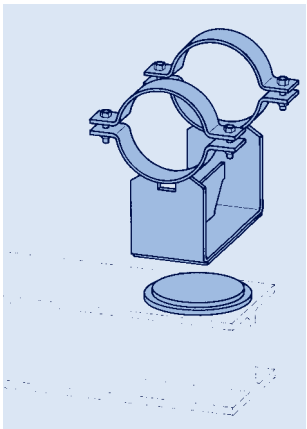

Clamp base type 49 with slide plate

1 Transport and storage

Care must be taken during transport that no clamp base components are damaged. When stored in the open, the clamp bases must be protected from dirt and water.

2 Delivery condition

If not agreed otherwise, LISEGA clamp bases are delivered pre-assembled and ready for installation. For reasons of efficient dispatch clamp bases can be delivered partially assembled. In any event the clamp base is supplied with all the necessary bolts.

3 Installation

Type 49

LISEGA clamp bases are slidable supports that are fastened to pipe systems by clamping tension. On installation it is essential that the whole clamp base bottom lies flush and can slide unobstructed over the given stretches.

If required, the lower parts can be welded to the supporting surface.

Different designs are used depending on the height of the support, the pipe diameter, the support load and the operating temperature. The following points are hereby to be observed:

Type 49 .. .1 and 49 .. .2

This clamp base design is made up of two halves to be fitted to each side of the pipe. The cornered surfaces form the base. In this lower part the clamp base halves are firmly bolted to each other. The upper bolting serves for clamping tension in the piping against slipping.

Type 49 .. .3, 49 .. .4 and 49 .. .5

The base part of the clamp base forms a firm support for the pipe to be laid in. The upper half provides clamping tension and is to be firmly bolted

4 Inspection and maintenance

Under normal circumstances no maintenance is required.

Type 49 .. .1 and 49 .. .2

Type 49 .. .3 and 49 .. .4

Type 49 .. .3, 49 .. .4 and 49 .. .5

Roller bearings, pipe saddles, cryogenic clamp bases

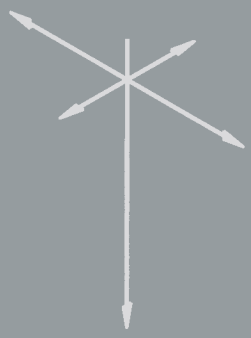

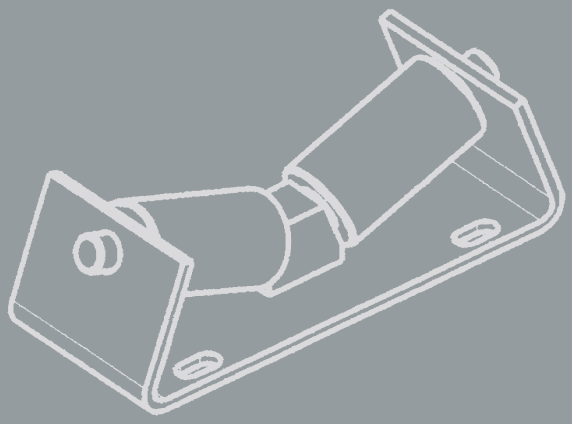

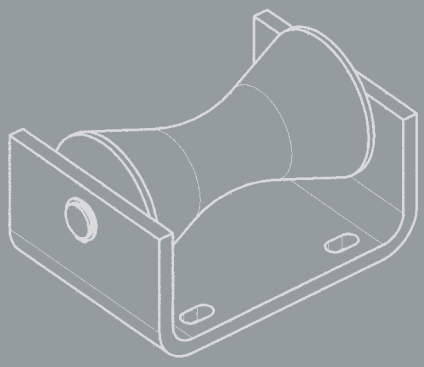

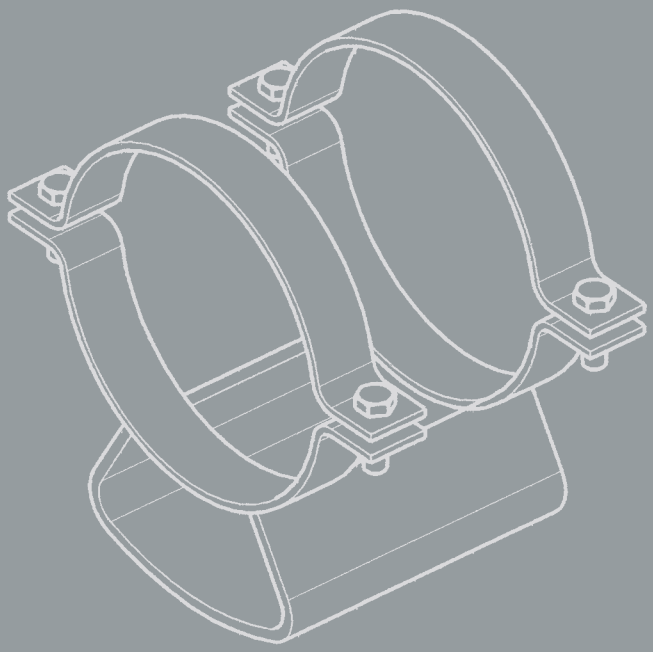

LISEGA

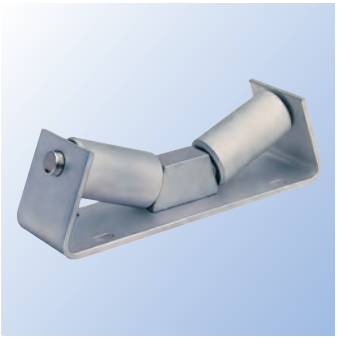

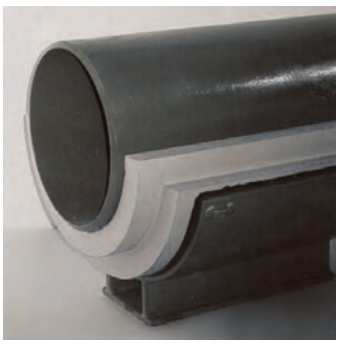

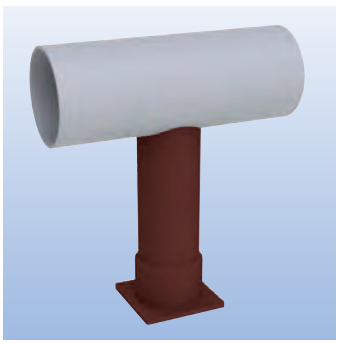

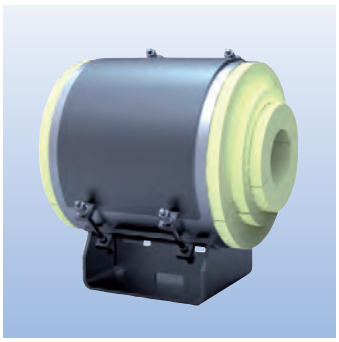

Roller bearings, pipe saddles, cryogenic clamp bases

Contents **Page**

Roller bearings and pipe saddles **5.1**

Selection tables. **5.3**

Cylinder roller bearings type 51 . . . . . **5.3**

Double taper roller bearings type 52 . . . . . **5.3**

Double cylinder roller bearings type 53 . . . . . **5.4**

Weld-on pipe saddles type 54 . . . . . **5.5**

Pipe saddles with clamps type 54 . . . . . **5.5**

Pipe trays with clamps type 54 . . . . . **5.6**

Lift-off restraints type 55 . . . . . **5.6**

Cryogenic pipe supports HIPAC® type 56, 57 . . . . . **5.7**

Selection tables. **5.11**

Weld-on pipe shoes type 57 . . . . . **5.11**

Stanchions **5.12**

Stanchions for horizontal pipes type 58 . . . . . **5.12**

Stanchions for short radius elbows (R = NPS) type 58 . . . . . **5.13**

Stanchions for long radius elbows (R = 1.5NPS) type 58 . . . . . **5.14**

Roller bearings and pipe saddles Type 51, 52, 53, 54, 55

Pipe systems arranged horizontally over longer stretches are supported by movable support bearings and fixed points. To ensure thermal expansion displacement with little friction, the bearing points are designed to be rolling or sliding.

For pipe systems of larger diameters and especially where high loads are caused by fluids and insulation weights, the optimum solution is provided by roller bearings of high load-bearing capacity, great reliability and extremely low friction resistance.

LISEGA standard roller bearings and pipe saddles

These components offer a suitable standard solution for a wide range of applications within product group 5.

For use outside the standard range specially modified designs can be supplied.

Design features and execution

In the development of standard roller bearings, the particular practical requirements that had to be met, were taken into account.

The design of the roller bearing enables optimum corrosion protection through hot dip galvanization.

The bearing axles are made of austenitic material with polished surfaces. As bearings for the rollers, bushings made of a sintered teflon / bronze composite material are fitted. They are maintenance-free and guarantee smooth dry run characteristics. A formed collar on the bushings minimizes starting friction on lateral loading.

The bearing axles are permanently fixed in the middle section of the base body of the double cylinder roller bearings. Special securing devices on the side bracket are not required.

The rollers are of high-tensile carbon steel. The running surfaces are machined.

To balance lateral offset in anchor bolts on site, the intake holes of the base body are slotted. The installation height (E dimensions) within a load group range are the same for rigid and laterally movable roller bearings.

Data on material quality, norms, calculations and welding can be found in the **technical specifications**, pages 0.9 and 0.10.

Manufacture and storage

Standardization of the products permits efficient series production and storage for most components. For individual manufacture or fabrication in small batches, modern order logistics ensures rapid production and delivery.

Technical data for roller bearings:

- **rolling resistance of the rollers max. 4%**
- **rolling resistance on lateral displacement max. 4%**
- **temperature range for nominal load −22°F to 176°F [−30°C to +80°C]**
- **permissible lateral loading 35% of nominal load**
- **permissible lift-off load 10% of nominal load**

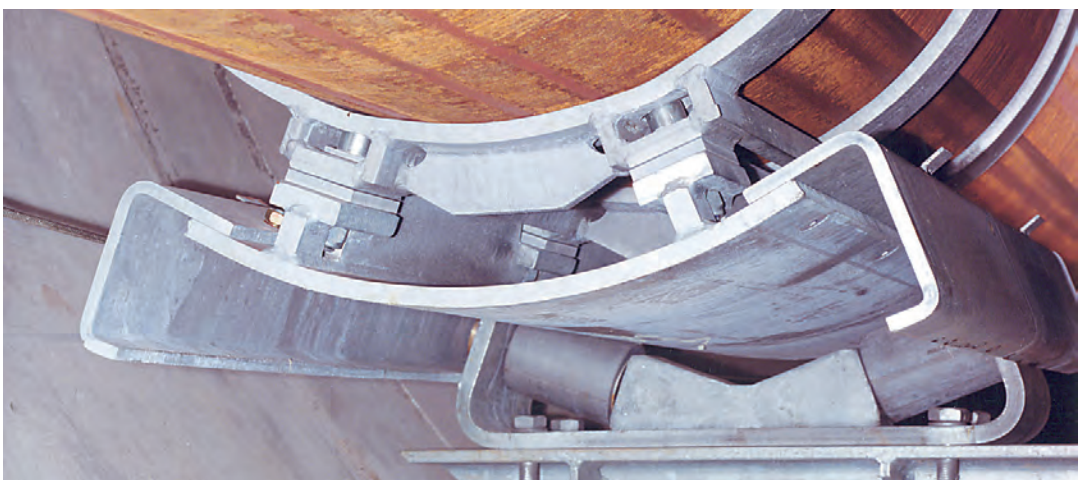

Special pipe saddle type 54 with double cylinder roller bearing type 53 and lift-off restraints type 55

Roller bearings

The roller bearings can be fastened with simple bolted connections or welded to the supporting surface. In all cases the whole base plate must lie flush on the surface.

On slight lateral offset of existing anchor bolts the roller bearings can be easily aligned using the existing slot holes.

Pipe saddles

Pipe saddles for welding are supplied with a weldable primer as corrosion protection (see technical specifications, pages 0.10 and 0.11).

Clamp-fastened pipe saddles are supplied ready-to-install. Close attention must be paid to true-to-size seating and sufficient pre-stressing.

Lift-off restraints

When installing lift-off restraints, normal displacement over the whole range must be ensured to allow sufficient play between rollers and lift-off restraints.

Their special design and their manufacturing quality offer the following benefits in application:

- **maintenance of minimum rolling resistance (max. 4%)**
- **absorption of realistic lateral loading for double taper and double cylinder roller bearings (35% of the support load)**
- **for double cylinder roller bearings the whole support load can be carried by a single roller**
- **absorption of lateral displacement possible by laterally movable designs**
- **safe and simple design of lift-off restraints**
- **pipe saddles facilitate load transmission into the pipe walls**
- **pipe saddle design minimizes heat transmission**
- **hot dip galvanized corrosion protection for all roller bearings**
- **maintenance-free operation**
- **roller axle made of non-rusting steel**
- **teflon-bronze composite bushings**
- **wide range of support diameters (OD 2.37inch – OD 53.15inch) [OD 60mm – OD 1350mm]**
- **high load capacity (max. support load 27kips [120kN])**
- **low installation heights (see selection table for ‘E’ dimensions)**

Roller bearings
Type 51, 52

Cylinder roller bearings
type 51 08 19 to 51 35 19

Surface:
hot dip galvanized

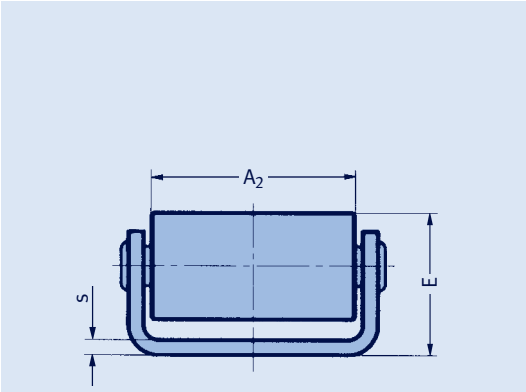

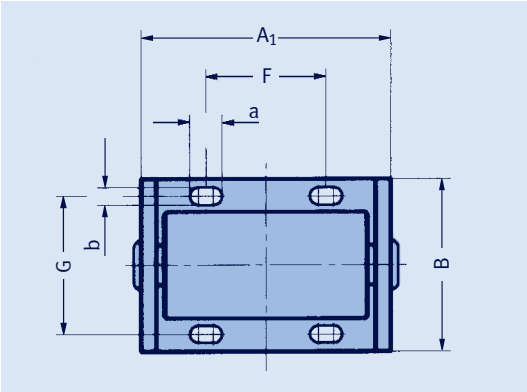

Order details:
cylinder roller bearing
type 51 .. 19

type	load F_N [lbs x 1000]	A_1	A_2	B	E	F	G	a	b	s	weight [lbs]
51 08 19	1.8	3.54	2.76	3.15	1.97	1.38	2.36	0.79	0.39	0.20	2.6
51 16 19	3.6	4.72	3.94	3.94	2.36	2.17	2.95	0.94	0.47	0.24	5.2
51 35 19	7.9	5.71	4.72	5.12	3.35	2.36	3.74	1.02	0.55	0.39	12.2

Double taper roller bearings
type 52 04 19 to 52 35 19

Surface:
hot dip galvanized

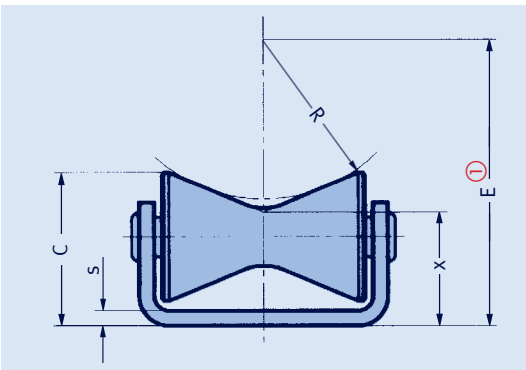

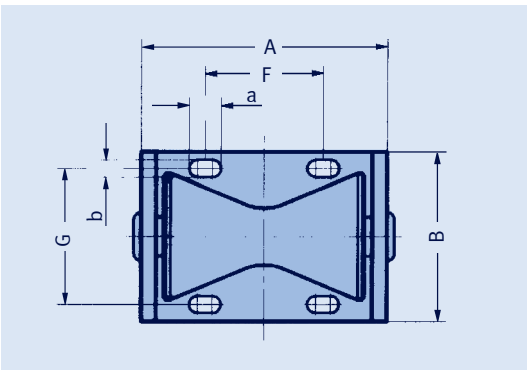

① E = 1.064 x R + x

Order details:
double taper roller bearing
type 52 .. 19

type	load F_N [lbs x 1000]	R	A	B	C	E ① min.	E ① max.	F	G	a	b	s	x	weight [lbs]
52 04 19	0.9	1.06 – 3.94	4.13	3.54	2.76	3.27	6.30	2.17	2.76	0.79	0.39	0.16	2.13	4.0
52 08 19	1.8	3.31 – 5.12	5.31	3.94	3.35	6.02	7.95	2.95	2.95	0.79	0.39	0.24	2.52	7.2
52 16 19	3.6	4.33 – 6.50	6.50	4.72	3.94	7.52	9.84	3.54	3.54	0.94	0.47	0.31	2.91	12.0
52 35 19	7.9	5.35 – 9.06	9.06	6.30	5.31	9.72	13.66	5.12	4.72	1.02	0.55	0.47	4.02	30.8

Double taper roller bearings
(laterally movable)
type 52 04 29 to 52 35 29

Surface:
hot dip galvanized

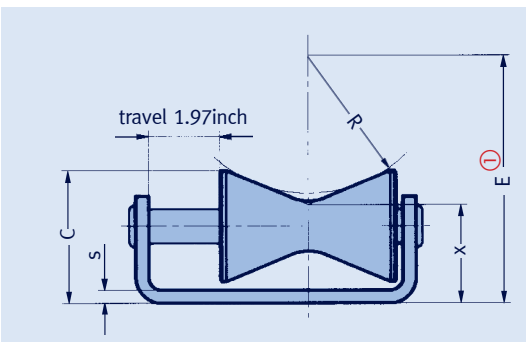

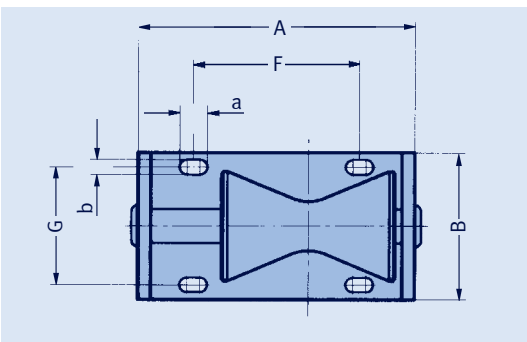

① E = 1.064 x R + x

Order details:
double taper roller bearing
(laterally movable)
type 52 .. 29

type	load F_N [lbs x 1000]	R	A	B	C	E ① min.	E ① max.	F	G	a	b	s	x	weight [lbs]
52 04 29	0.9	1.06 – 3.94	6.10	3.54	2.76	3.27	6.30	4.13	2.76	0.79	0.39	0.16	2.13	4.4
52 08 29	1.8	3.31 – 5.12	7.28	3.94	3.35	6.02	7.95	4.72	2.95	0.79	0.39	0.24	2.52	8.0
52 16 29	3.6	4.33 – 6.50	8.46	4.72	3.94	7.52	9.84	5.51	3.54	0.94	0.47	0.31	2.91	13.2
52 35 29	7.9	5.35 – 9.06	11.02	6.30	5.31	9.72	13.66	7.09	4.72	1.02	0.55	0.47	4.02	34.2

Double cylinder roller bearings Type 53

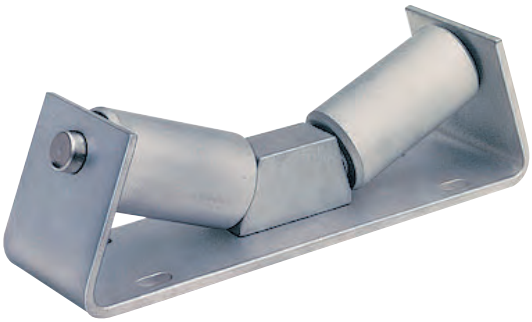

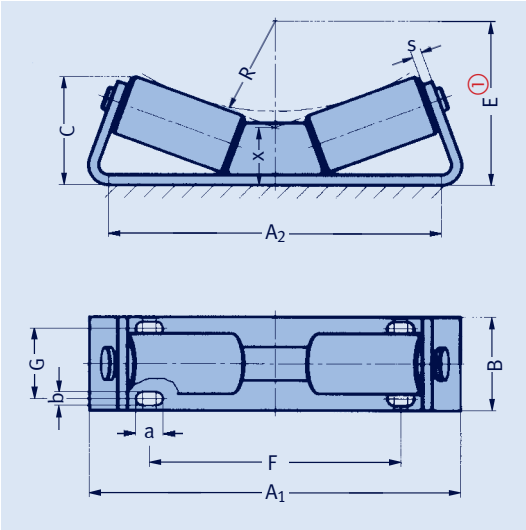

Double cylinder rollers bearing type 53 08 19 to 53 12 19

Surface:
hot dip galvanized

type	load F_N [lbs x 1000]	R	A_1	A_2	B	C	E ① min.	E ① max.	F	G	a	b	s	x	weight [lbs]
53 08 19	1.8	1.18 – 7.48	8.27	7.48	3.15	2.56	2.83	9.53	5.51	2.36	0.79	0.39	0.20	1.57	5.6
53 16 19	3.6	3.35 – 12.20	12.20	11.22	3.94	3.54	5.31	14.76	9.06	2.95	0.94	0.47	0.24	1.77	12.2
53 35 19	7.9	6.89 – 17.32	16.54	14.57	5.12	4.33	9.45	20.47	12.60	3.54	1.02	0.55	0.39	2.09	30.8
53 60 19	13.5	9.84 – 20.47	19.29	16.93	5.91	5.31	12.95	24.21	14.57	3.94	1.22	0.71	0.47	2.48	50.8
53 12 19	27.0	15.75 – 26.57	24.41	20.67	7.09	6.50	19.49	30.91	18.11	4.53	1.22	0.87	0.71	2.76	105.8

① E = 1.064 x R + x

Order details:
double cylinder roller bearing
type 53 .. 19

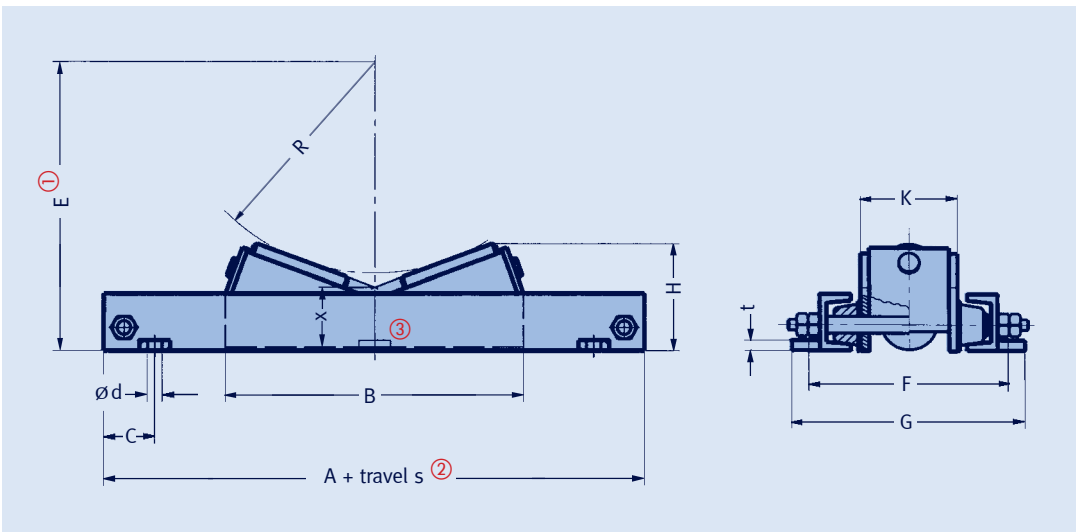

Double cylinder roller bearings (laterally movable) type 53 08 29 to 53 12 29

travel s = lateral pipe movement

Surface:
hot dip galvanized

type	load F_N [lbs x 1000]	R	A	B	C	ød	E ① min.	E ① max.	F	G	H	K	t	x	weight [lbs] for s = 3.94inch	weight [lbs] + per 3.94inch
53 08 29	1.8	1.80 – 7.48	10.24	8.27	1.97	0.39	2.83	9.53	5.71	6.50	2.56	2.36	0.20	1.57	13.2	1.3
53 16 29	3.6	3.35 – 12.20	13.78	11.81	1.97	0.47	5.31	14.76	6.30	7.28	3.54	2.95	0.20	1.77	22.0	1.3
53 35 29	7.9	6.89 – 17.32	18.70	16.14	2.36	0.55	9.45	20.47	8.46	9.65	4.33	3.94	0.24	2.09	50.8	2.2
53 60 29	13.5	9.84 – 20.47	20.87	18.31	2.76	0.71	12.95	24.21	9.84	11.42	5.12	4.72	0.31	2.48	77.2	2.2
53 12 29	27.0	15.75 – 27.56	27.56	25.00	3.15	0.91	19.49	30.91	12.40	14.17	6.30	5.71	0.39	2.76	154.0	3.8

① E = 1.064 x R + x

② Travel s = 3.94...23.62inch [100...600mm].

③ Middle fixed point from travel s = 11.81inch [300mm].

Order details:
double cylinder roller bearing (laterally movable)
type 53 .. 29
with s = ...inch

Weld-on pipe saddles Type 54
Pipe saddles with clamps Type 54

Weld-on pipe saddles type 54 06 19 to 54 81 19

Material:
carbon steel

Surface:
weldable primer

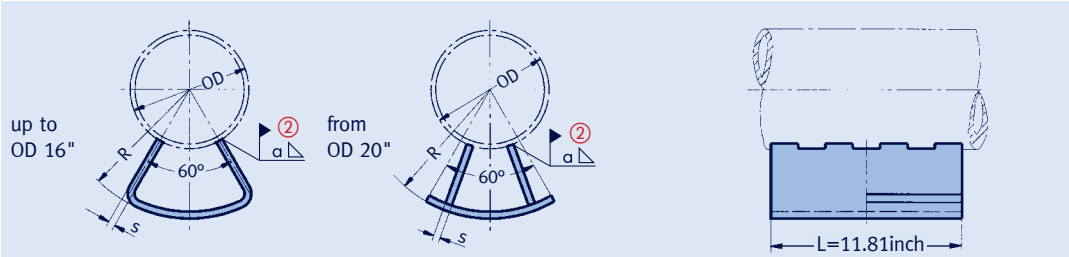

① Load at pipe temperature ≤ 302°F [≤150°C]

② Minimum weld seam

type	load F_N ① [lbs x 1000]	OD	R	a ② leg length	s	weight [lbs]
54 06 19	0.3	2.37	3.15 – 7.09	3/16	0.12	3.0 – 7.8
54 08 19	0.3	3.00	3.54 – 7.48	3/16	0.12	3.4 – 8.2
54 09 19	0.3	3.50	3.74 – 7.68	3/16	0.12	3.4 – 8.4
54 11 19	0.4	4.50	4.33 – 8.27	3/16	0.12	3.4 – 8.8
54 14 19	0.9	5.50	4.72 – 8.66	3/16	0.16	4.4 – 11.0
54 17 19	0.9	6.63	5.31 – 9.25	3/16	0.20	6.6 – 14.4
54 19 19	1.1	7.63	5.91 – 9.84	3/16	0.20	6.6 – 15.0
54 22 19	1.8	8.63	6.30 – 10.24	1/4	0.24	8.8 – 17.6
54 27 19	2.7	10.75	7.48 – 11.42	1/4	0.39	14.8 – 29.8
54 32 19	4.5	12.75	8.46 – 12.40	1/4	0.47	21.2 – 39.6
54 36 19	4.5	14.00	9.06 – 12.99	1/4	0.47	22.0 – 39.6
54 41 19	8.5	16.00	10.04 – 13.98	5/16	0.59	28.6 – 55.2
54 51 19	11.2	20.00	12.80 – 16.34	5/16	0.39	22.0 – 35.2
54 61 19	14.6	24.00	14.76 – 18.31	5/16	0.47	26.4 – 46.2
54 71 19	22.5	28.00	16.93 – 20.47	3/8	0.59	35.2 – 57.4
54 81 19	27.0	32.00	18.90 – 22.44	3/8	0.79	41.8 – 72.8

Order details:
weld-on pipe saddle
type 54 .. 19
R = ...inch

Pipe saddles with clamps type 54 06 29 to 54 81 29

Surface:
hot dip galvanized

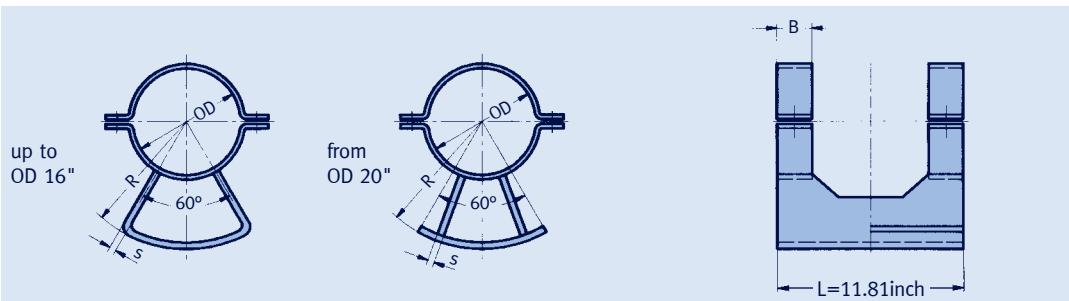

① Load at pipe temperature ≤ 302°F [≤150°C]

type	load F_N ① [lbs x 1000]	OD	R	B	s	weight [lbs]
54 06 29	0.3	2.37	3.15 – 7.09	1.57	0.12	5.6 – 10.6
54 08 29	0.3	3.00	3.54 – 7.48	1.57	0.12	6.2 – 12.8
54 09 29	0.3	3.50	3.74 – 7.68	1.57	0.12	6.8 – 13.2
54 11 29	0.4	4.50	4.33 – 8.27	1.97	0.12	11.0 – 15.4
54 14 29	0.9	5.50	4.72 – 8.66	1.97	0.16	13.2 – 19.8
54 17 29	0.9	6.63	5.31 – 9.25	1.97	0.20	15.4 – 26.4
54 19 29	1.1	7.63	5.91 – 9.84	1.97	0.20	17.6 – 28.6
54 22 29	1.8	8.63	6.30 – 10.24	1.97	0.24	19.8 – 33.0
54 27 29	2.7	10.75	7.48 – 11.42	2.36	0.39	33.0 – 44.0
54 32 29	4.5	12.75	8.46 – 12.40	2.36	0.47	41.8 – 57.4
54 36 29	4.5	14.00	9.06 – 12.99	2.36	0.47	46.2 – 66.2
54 41 29	8.5	16.00	10.04 – 13.98	2.76	0.59	66.2 – 88.2
54 51 29	11.2	20.00	12.80 – 16.34	2.76	0.39	70.6 – 83.8
54 61 29	14.6	24.00	14.76 – 18.31	3.54	0.47	139.0 – 159.0
54 71 29	22.5	28.00	16.93 – 20.47	3.54	0.59	165.0 – 190.0
54 81 29	27.0	32.00	18.90 – 22.44	3.54	0.79	185.0 – 216.0

Order details:
pipe saddle with clamps
type 54 .. 29
R = ...inch

Pipe trays with clamps Type 54
Lift-off restraints Type 55

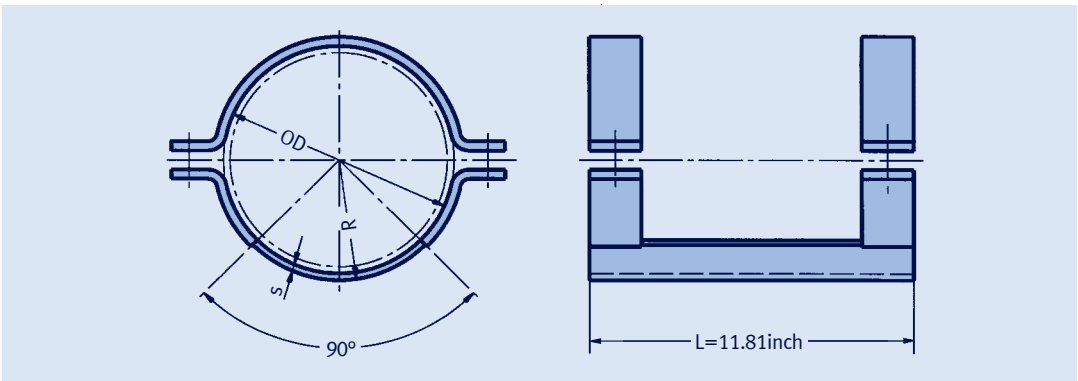

Pipe trays with clamps type 54 06 39 to 54 81 39

Surface:
hot dip galvanized

type	load F_N [lbs x 1000]	OD	R	s	weight [lbs]
54 06 39	0.2	2.37	1.34	0.12	3.5
54 08 39	0.2	3.00	1.61	0.12	4.5
54 09 39	0.3	3.50	1.89	0.20	5.5
54 11 39	0.4	4.50	2.44	0.20	10.5
54 14 39	0.9	5.50	2.95	0.20	12.0
54 17 39	0.9	6.63	3.54	0.20	13.0
54 19 39	1.2	7.63	4.02	0.20	14.5
54 22 39	1.8	8.63	4.57	0.24	16.5
54 27 39	2.3	10.75	5.63	0.24	24.5
54 32 39	3.4	12.75	6.69	0.31	31.0
54 36 39	4.5	14.00	7.40	0.39	35.5
54 41 39	7.9	16.00	8.43	0.39	53.0
54 51 39	9.0	20.00	10.39	0.39	61.5
54 61 39	13.5	24.00	12.48	0.47	123.0
54 71 39	18.0	28.00	14.57	0.59	150.0
54 81 39	22.5	32.00	16.57	0.59	165.0

Order details:
pipe tray with clamps
type 54 .. 39

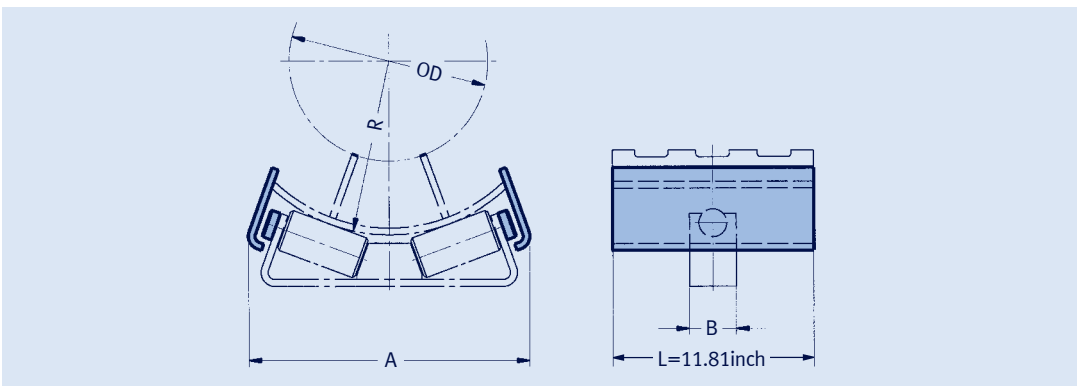

Lift-off restraints type 55 08 19 to 55 12 19

Surface:
hot dip galvanized

type	compatible with roller bearing. type	A	B	R
55 08 19	53 08 19	8.90	3.15	1.18 – 7.48
55 16 19	53 16 19	13.19	3.94	3.35 – 12.20
55 35 19	53 35 19	17.91	5.12	6.89 – 17.32
55 60 19	53 60 19	22.05	5.91	9.84 – 20.47
55 12 19	53 12 19	27.56	7.09	15.75 – 26.57

Order details:
lift-off restraint
type 55 .. 19
for special pipe saddles
type 54 .. .9
R = ...inch

Cryogenic pipe supports HIPAC® Type 56, 57

Warehouse for moulded insulations

Preassembled insulated supports

Special design for ø 64inch [ø 1625.6mm]

Supports for cold and cryogenic applications

LISEGA offers a complete product program of insulated pipe supports for all kinds of low temperature pipe systems. These products are normally used in industrial processes for the production, transport and distribution of liquefied gases. These can be propane and butane (LPG), methane (LNG), ethylene, nitrogen, ammonia etc..

LISEGA insulated pipe supports are standardized and designed according to recognized international technical codes and standards. They cover pipe sizes ranging from OD 0.84inch [21.3mm] to OD 38inch [965.2mm], with insulation thicknesses from 0.98inch [25mm] to 9.84inch [250mm]. The supports are made from materials suitable for the specified loads and temperatures (temperature of medium as low as –321°F [–196°C]).

Insulating material

The material of the insulated standard pipe supports is made from fire-retarding polyurethane foam of high density (HD-PUF) and forms an integral part of the piping insulation.

Production of HD-PUF insulation

The HD-PUF insulation is molded in heavy duty molds under carefully controlled conditions in respect of temperature and air humidity. This process ensures dimensional stability as well as clean sharp edges that fit neatly with the adjacent line insulation material on site.

To guarantee form stability, the molds are stored for a fixed period of time in order to cure. For insulations of higher thicknesses stepped joints are provided to match the layering of the adjoining line insulation. This method, also known as "shiplapping", provides a reliable interlocking connection to each layer and prevents a direct heat path from the surface of the insulation through to the surface of the piping.

The stepped joints are 0.98inch [25mm] long but can be supplied in 1.97inch [50mm] steps on request. Insulation foam with thicknesses up to 1.97inch [50mm] are single-layer designs without stepping.

insulation thickness [inch]	insulation level thickness [inch]
3.15	1.57 / 1.57
3.94	1.97 / 1.97
5.12	1.97 / 1.57 / 1.57
5.91	1.97 / 1.97 / 1.97
7.09	1.97 / 3.15 / 1.97
7.87	1.97 / 3.94 / 1.97
9.84	2.95 / 3.94 / 2.95

Insulation foam with thicknesses of 3.15inch [80mm] to 3.94inch [100mm] are single layer with an extended step at either side. For type 56, insulation foam thicknesses of 5.12inch [130mm] and higher are supplied as double-layer with two steps. To achieve load transmission for axial stop type 57, the HD-PUF insulation is designed as single-layers.

Both single-layer and double-layer HD-PUF insulation have stepped longitudinal joints. The size of these joints must be adjusted during installation to a specified gap dimension to ensure a clamping force from the insulated pipe support on the piping. Once installed the longitudinal gaps are then filled with a flexible insulating foam. The clamping force, which is applied by means of disc spring bolting, prevents relative movement between pipe support and piping.

A laminated aluminum/polyester vapor barrier is factory-bonded to the outer surface of the HD-PUF insulation. The vapor barrier overlaps the longitudinal joints and is sealed at site with a special vapor barrier adhesive tape. Directly after installation of the insulated pipe support, all exposed HD-PUF surfaces must be protected from moisture. For this purpose a cryogenic, elastomeric coating is applied as vapor barrier.

For the HD-PUF insulation three standard color-coded densities for various load requirements are available.

10lbs/ft³ [160kg/m³] – yellow
14lbs/ft³ [224kg/m³] – red
20lbs/ft³ [320kg/m³] – green

Special advantages of HIPAC® insulated pipe supports

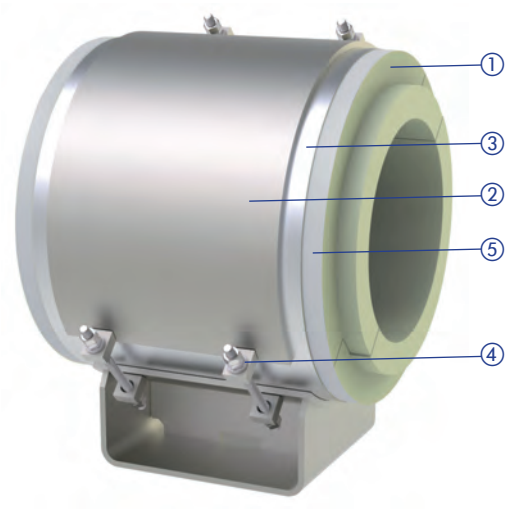

① HD-PUF insulation with stepped longitudinal joints and stepped front ends
② steel cradle
③ metal protective shield
④ disc spring bolting
⑤ vapor barrier

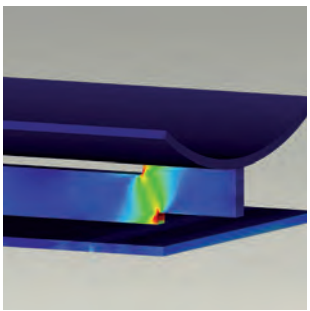

Finite element analysis of a special design

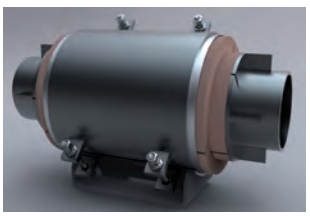

Insulated standard pipe support type 57

Insulated pipe support base

LISEGA standardized insulated pipe supports are designed to be clamped mechanically to the piping by means of disc spring bolting. The pipe support steel cradle, which houses the HD-PUF insulation, is made of carbon steel and hot-dip galvanized as standard.

Material grades, welding and surface treatment comply with the LISEGA standard specifications. The integrated LISEGA quality assurance system applies to both the manufacture and preassembly of the pipe supports. Inspection and testing procedures guarantee compliance with the required specifications.

LISEGA insulated standard pipe supports are supplied with detailed installation instructions. Every support is clearly marked according to the LISEGA type designation system. The flexible gap filler insulation foam, as well as the special vapor barrier sealing tape are part of the scope of supply. Additional site installation materials such as cryogenic adhesives and mastics can be supplied on request.

LISEGA insulated pipe supports are completely preassembled and supplied in appropriate packaging to protect them from surface damage and humidity during transport and storage.

Preassembled insulated pipe supports

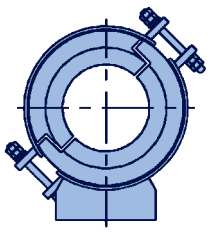

Type 56 .. ..

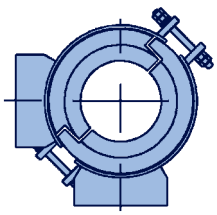

Type 56 .. .. G2A

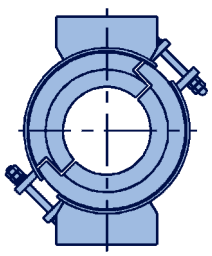

Type 56 .. .. G2P

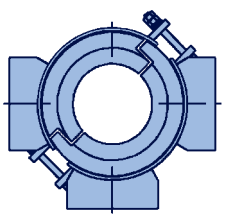

Type 56 .. .. G3

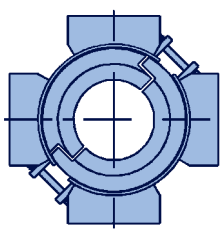

Type 56 .. .. G4

Design

Type 56 is a conventional insulated pipe support and functions as a slide or guide support. Type 57 is similar to type 56 but serves as an axial stop that absorbs increased axial loads by means of thrust rings. The thrust rings on the piping consist of two half-rings which are welded together at site to form a single ring. The rings, which are movable on the piping, are fixed by means of shear lugs welded onto the pipe.

This patented design offers the advantage of fixing the insulated pipe support to the piping after final positioning. There is no need to disassemble the existing or already installed steelwork. The thrust rings and shear lugs are made of stainless steel and form part of the scope of supply.

Double and multiple clamp base pipe supports

For high vertical loads or high lateral loads, double clamp bases or guided supports are required. For this purpose, LISEGA's insulated pipe supports can be extended as required. Each variant is given a suffix after the 6th digit which describes the type of guide used. The pipe support can be ordered in the following designs:

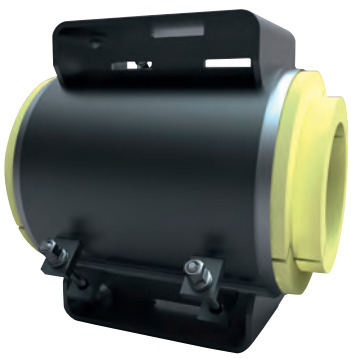

Insulated double clamp base type 56 .. .. G2P

G2A: Angulated clamp base pipe support (laterally guided)
G2P: Double clamp base pipe support (parallely guided)
G3: Triple clamp base pipe support
G4: Quadruple clamp base pipe support

Type 56 as well as type 57 can be ordered with these guide options. A type 57 can be used e.g. as a quadruple pipe support in a vertical pipe.

Special design

LISEGA takes pride in offering solutions to their clients and will gladly assist in any special inquiry.

- **Special pipe sizes can be accommodated.**
- **For large axial movements, special lengths can be supplied.**
- **The use of an insulated pipe support as a hanger (e.g. in combination with spring or constant hangers) is possible. In this case the shoe of the clamp base is replaced by a special pipe clamp type 43. The clamp is then designed for the particular conditions existing in each case.**

- **Deviations from the standard HD-PUF densities can be supplied, e.g. a density of 30lbs/ft³ [500kg/m³] for high loads.**
- **The use of the pipe support on sliding components is possible. For this purpose a stainless steel plate is fixed to the underside of the shoe.**
- **For special applications when increased loads have to be absorbed, laminated wooden blocks can be utilized.**
- **The installation dimension 'E' can be adjusted but it must be considered that changes in the 'E' dimension can influence the design and the permissible loads. The actual operating loads must therefore be specified when ordering.**

All details required for product selection can be found in the special HIPAC® catalog.

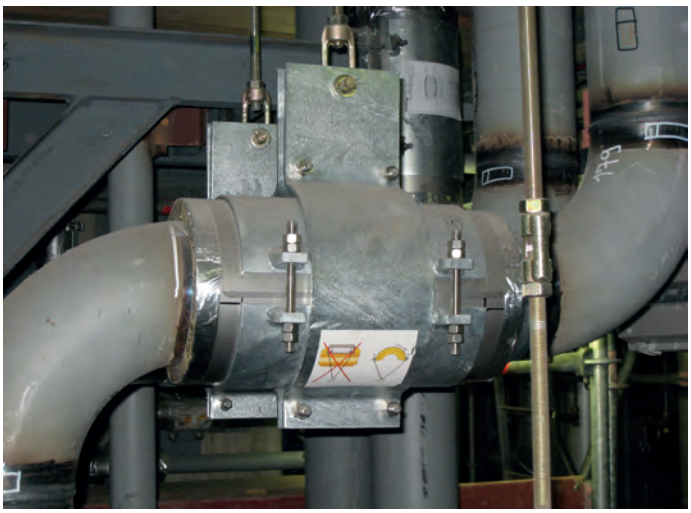

Suspension with cryogenic pipe clamps

Cryogenic clamp base type 56

Pipes held in position with cryogenic supports

Final inspection of cryogenic clamp bases

Weld-on pipe shoes Type 57

Weld-on pipe shoes made from T/U profiles type 57 .. 11 and 57 .. 12

For use at low pipe loads and temperatures ≤ 176°F [≤ 80°C].

Material: carbon steel

Surface: weldable primer

Type designation:
57 .. 11 (T–Shoe)
57 .. 12 (U–Shoe)

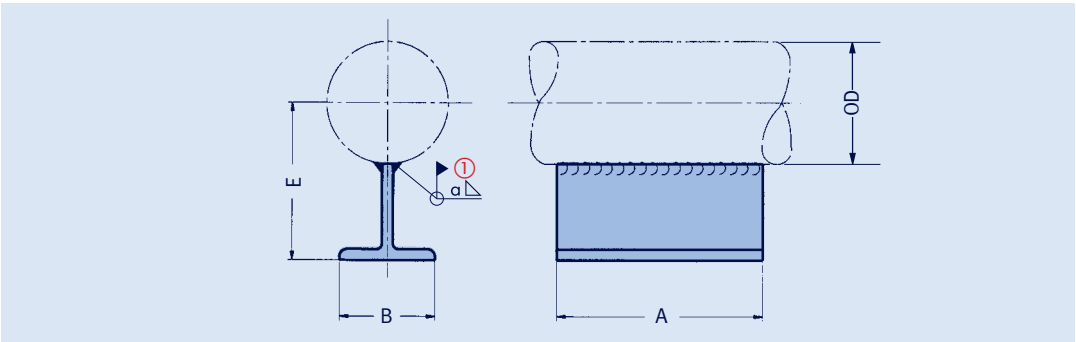

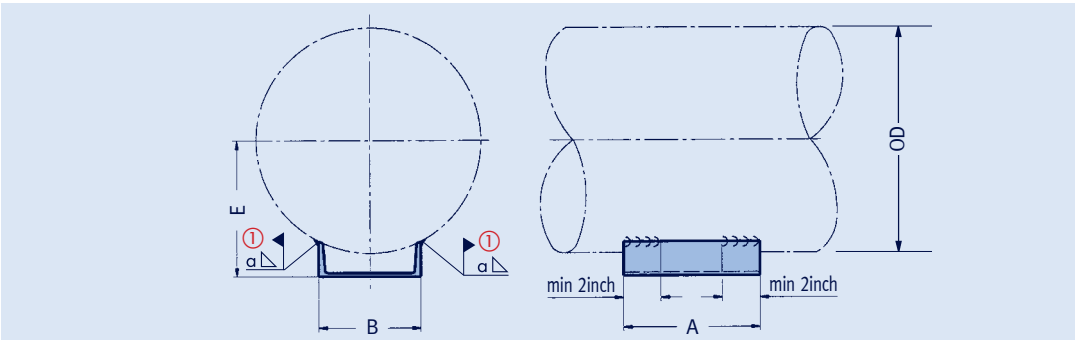

① Weld seam on site – for specified weld seam thickness and permissible load, the weld seam stress is smaller than 7.25ksi [50N/mm²].

type	load F [lbs x 1000] at 176°F	OD	A	B	E	a ① leg length	weight [lbs]
57 03 11	0.22	0.84	3.94	2.76	3.19	3/16	1.5
57 03 11	0.22	1.06	3.94	2.76	3.27	3/16	1.5
57 03 11	0.22	1.33	3.94	2.76	3.43	3/16	1.5
57 03 11	0.22	1.67	3.94	2.76	3.58	3/16	1.5
57 03 11	0.22	1.90	3.94	2.76	3.70	3/16	1.5
57 07 11	0.34	2.37	5.91	2.76	3.94	3/16	2.3
57 07 11	0.34	2.87	5.91	2.76	4.21	3/16	2.3
57 07 11	0.34	3.00	5.91	2.76	4.25	3/16	2.3
57 07 11	0.34	3.50	5.91	2.76	4.53	3/16	2.3
57 13 11	0.45	4.25	5.91	3.94	6.06	3/16	7.5
57 13 11	0.45	4.50	5.91	3.94	6.18	3/16	7.5
57 13 11	0.45	5.25	5.91	3.94	6.57	3/16	7.5
57 13 11	0.45	5.50	5.91	3.94	6.69	3/16	7.5
57 13 11	0.45	6.25	5.91	3.94	7.09	3/16	7.5
57 13 11	0.45	6.63	5.91	3.94	7.24	3/16	7.5
57 24 12	1.35	7.63	9.84	3.94	5.31	1/4	6.0
57 24 12	1.35	8.63	9.84	3.94	5.91	1/4	6.0
57 24 12	1.35	9.63	9.84	3.94	6.42	1/4	6.0
57 24 12	1.35	10.50	9.84	3.94	6.89	1/4	6.0
57 24 12	1.35	10.75	9.84	3.94	7.01	1/4	6.0
57 36 12	1.80	12.75	9.84	6.30	8.27	1/4	10.0
57 36 12	2.25	14.00	9.84	6.30	8.90	1/4	10.0
57 36 12	2.25	14.50	9.84	6.30	9.17	1/4	10.0
57 42 12	2.25	16.00	9.84	7.87	10.04	1/4	15.6
57 42 12	2.70	16.50	9.84	7.87	10.31	1/4	15.6
57 42 12	2.70	18.00	9.84	7.87	11.14	1/4	15.6
57 51 12	3.37	20.00	9.84	9.45	12.28	1/4	18.3
57 51 12	3.37	22.00	9.84	9.45	13.39	1/4	18.3
57 61 12	4.50	24.00	9.84	11.81	14.57	1/4	25.8
57 61 12	4.50	26.00	9.84	11.81	15.75	1/4	25.8

Order details:
weld-on pipe shoe type 57 .. 1.

Stanchions for horizontal pipes Type 58

type ③	OD	D x s	stanchions type	a ② leg length	N	E_{min}	E_{max}
58 05 .1	1.90	1 sch 80	a	3/16	0.95	9.84	39.37
58 06 .1	2.37	1 sch 80	a	3/16	1.19	9.84	39.37
58 06 .2	2.37	1.5 sch 80	b	3/16	1.19	9.84	43.31
58 07 .1	2.87	1 sch 80	a	3/16	1.44	9.84	39.37
58 07 .2	2.87	1.5 sch 80	b	3/16	1.44	9.84	43.31
58 08 .1	3.00	1 sch 80	a	3/16	1.50	9.84	39.37
58 08 .2	3.00	1.5 sch 80	b	3/16	1.50	9.84	43.31
58 09 .1	3.50	1 sch 80	a	3/16	1.75	9.84	39.37
58 09 .2	3.50	1.5 sch 80	b	3/16	1.75	9.84	43.31
58 10 .1	4.25	1.5 sch 80	b	3/16	2.13	11.81	45.28
58 10 .2	4.25	2.5 sch 80	c	3/16	2.13	11.81	45.28
58 11 .1	4.50	1.5 sch 80	b	3/16	2.25	11.81	45.28
58 11 .2	4.50	2.5 sch 80	c	3/16	2.25	11.81	45.28
58 13 .1	5.25	1.5 sch 80	b	3/16	2.63	11.81	45.28
58 13 .2	5.25	2.5 sch 80	c	3/16	2.63	11.81	45.28
58 14 .1	5.50	2.5 sch 80	c	3/16	2.75	11.81	45.28
58 14 .2	5.50	3 sch 40	d	3/16	2.75	11.81	45.28
58 16 .1	6.25	2.5 sch 80	c	3/16	3.13	11.81	45.28
58 16 .2	6.25	3 sch 40	d	3/16	3.13	11.81	45.28
58 17 .1	6.63	2.5 sch 80	c	3/16	3.32	11.81	45.28
58 17 .2	6.63	3 sch 40	d	3/16	3.32	11.81	45.28
58 19 .1	7.63	3 sch 40	d	3/16	3.82	13.78	45.28
58 19 .2	7.63	4 sch 80	e	1/4	3.82	13.78	45.28
58 22 .1	8.63	3 sch 40	d	3/16	4.32	13.78	47.24
58 22 .2	8.63	4 sch 80	e	1/4	4.32	13.78	47.24
58 24 .1	9.63	3 sch 40	d	3/16	4.82	13.78	47.24
58 24 .2	9.63	4 sch 80	e	1/4	4.82	13.78	47.24
58 26 .1	10.50	4 sch 80	e	1/4	5.25	13.78	47.24
58 26 .2	10.50	5 sch 80	f	3/8	5.25	13.78	47.24
58 27 .1	10.75	4 sch 80	e	1/4	5.38	13.78	47.24
58 27 .2	10.75	5 sch 80	f	3/8	5.38	13.78	47.24
58 32 .1	12.75	5 sch 80	f	3/8	6.38	15.75	49.21
58 32 .2	12.75	8 sch 40	g	1/4	6.38	15.75	49.21
58 36 .1	14.00	5 sch 80	f	3/8	7.00	15.75	49.21
58 36 .2	14.00	8 sch 40	g	1/4	7.00	15.75	49.21
58 37 .1	14.50	5 sch 80	f	3/8	7.25	15.75	49.21
58 37 .2	14.50	8 sch 40	g	1/4	7.25	15.75	49.21
58 41 .1	16.00	5 sch 80	f	3/8	8.00	17.72	51.18
58 41 .2	16.00	8 sch 40	g	1/4	8.00	17.72	51.18
58 42 .1	16.50	5 sch 80	f	3/8	8.25	17.72	51.18
58 42 .2	16.50	8 sch 40	g	1/4	8.25	17.72	51.18
58 46 .1	18.00	8 sch 40	g	1/4	9.00	19.69	51.18
58 46 .2	18.00	12 sch 40	h	3/8	9.00	19.69	51.18
58 51 .1	20.00	8 sch 40	g	1/4	10.00	19.69	53.15
58 51 .2	20.00	12 sch 40	h	3/8	10.00	19.69	53.15
58 56 .1	22.00	8 sch 40	g	1/4	11.00	21.65	53.15
58 56 .2	22.00	12 sch 40	h	3/8	11.00	21.65	53.15
58 61 .1	24.00	12 sch 40	h	3/8	12.00	21.65	55.12
58 66 .1	26.00	12 sch 40	h	3/8	13.00	23.62	55.12
58 71 .1	28.00	12 sch 40	h	3/8	14.00	23.62	57.09
58 76 .1	30.00	12 sch 40	h	3/8	15.00	25.59	57.09
58 81 .1	32.00	12 sch 40	h	3/8	16.00	25.59	59.06
58 91 .1	36.00	12 sch 40	h	3/8	18.00	27.56	61.02

For the selection of stanchions consult the table and diagram on page 5.15.

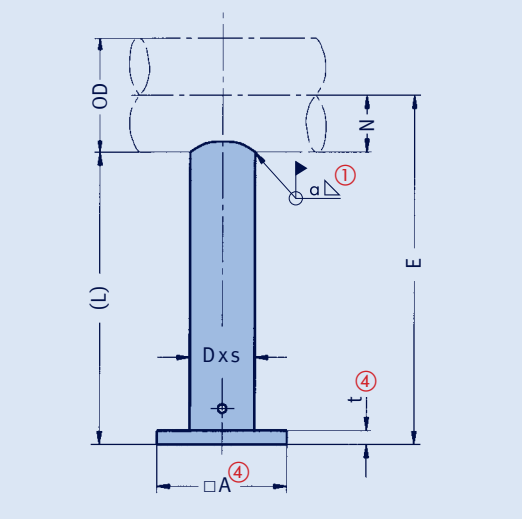

Type 58 .. 11
Type 58 .. 12

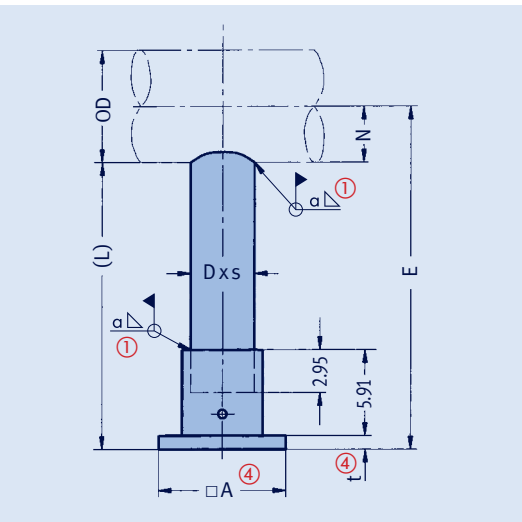

Type 58 .. 21
Type 58 .. 22

①...④ See page 5.15.

Example: Telescopic stanchion for pipe OD = 9.625inch [244.5mm], E = 31.50inch [800mm] (as sliding shoe). The stanchion length amounts to: L = E-N (see data in selection table)
L = 31.50inch – 4.80inch = 26.70inch
[L = 800mm – 122mm = 678mm].

For stanchion D = 3.50inch [88.9mm] (designation 'd').
Permissible load = 0.36 x 2470lbs.
(see table and diagram on page 5.15) = 890lbs.

Order details:
stanchion for horizontal pipes type 58 .. .., E = ...inch

Stanchions for short radius elbows (R = NPS) Type 58

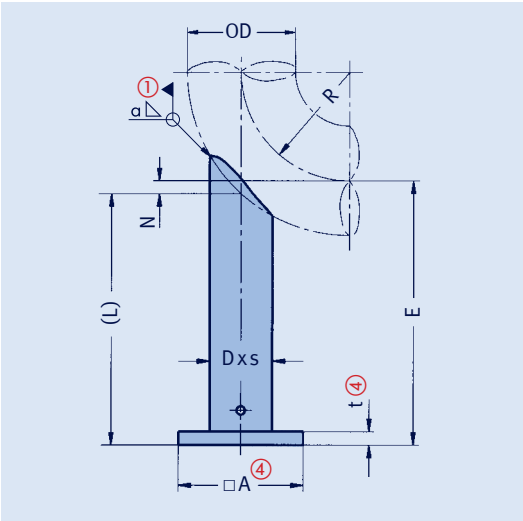

Type 58 .. 13
Type 58 .. 14

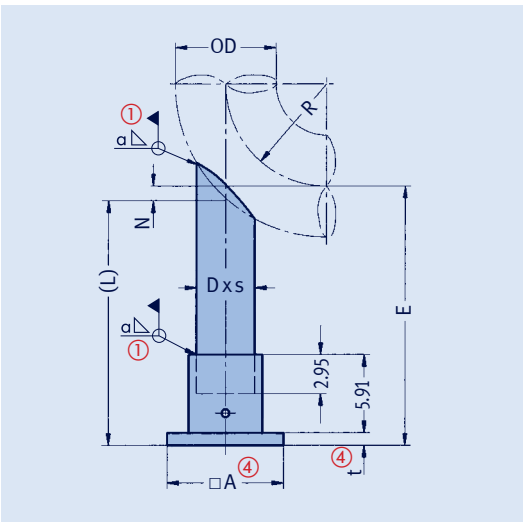

Type 58 .. 23
Type 58 .. 24

①...④ See page. 5.15.

Example: Stanchion for short radius elbow radius R = NPS, OD = 16.50inch [419mm], E = 29.53inch [750mm] (as anchor). Stanchion length: L = E-N (see data in selection table)
L = 29.53inch – 1.97inch = 27.56inch
[L = 750mm – 50mm = 700mm].

For stanchion D = 5.50inch [139.7mm] (designation 'f').
Permissible load = 0.41 x 5050lbs (see table and diagram on page 5.15) = 2070lbs.

Order details:
stanchion for short radius elbows R = NPS
type 58 .. .., E = ...inch

type ③	OD	D x s	stanchions type	a ② leg length	N	E_{min}	E_{max}
58 05 .3	1.90	1 sch 80	a	3/16	0.50	10	42
58 06 .3	2.37	1 sch 80	a	3/16	0.50	10	42
58 06 .4	2.37	1.5 sch 80	b	3/16	0.50	10	42
58 07 .3	2.87	1 sch 80	a	3/16	0.50	10	42
58 07 .4	2.87	1.5 sch 80	b	3/16	0.50	10	42
58 08 .3	3.00	1 sch 80	a	3/16	0.63	10	42
58 08 .4	3.00	1.5 sch 80	b	3/16	0.63	10	42
58 09 .3	3.50	1 sch 80	a	3/16	0.63	10	42
58 09 .4	3.50	1.5 sch 80	b	3/16	0.63	10	42
58 10 .3	4.25	1.5 sch 80	b	3/16	0.63	10	42
58 10 .4	4.25	2.5 sch 80	c	3/16	0.63	10	42
58 11 .3	4.50	1.5 sch 80	b	3/16	0.75	10	44
58 11 .4	4.50	2.5 sch 80	c	3/16	0.75	10	44
58 13 .3	5.25	1.5 sch 80	b	3/16	0.75	10	44
58 13 .4	5.25	2.5 sch 80	c	3/16	0.75	10	44
58 14 .3	5.50	2.5 sch 80	c	3/16	0.88	10	44
58 14 .4	5.50	3 sch 40	d	3/16	0.88	10	44
58 16 .3	6.25	2.5 sch 80	c	3/16	0.88	12	44
58 16 .4	6.25	3 sch 40	d	3/16	0.88	12	44
58 17 .3	6.63	2.5 sch 80	c	3/16	1.13	12	44
58 17 .4	6.63	3 sch 40	d	3/16	1.13	12	44
58 19 .3	7.63	3 sch 40	d	3/16	1.25	12	44
58 19 .4	7.63	4 sch 80	e	1/4	1.25	12	44
58 22 .3	8.63	3 sch 40	d	3/16	1.38	12	44
58 22 .4	8.63	4 sch 80	e	1/4	1.38	12	44
58 24 .3	9.63	3 sch 40	d	3/16	1.38	12	44
58 24 .4	9.63	4 sch 80	e	1/4	1.38	12	44
58 26 .3	10.50	4 sch 80	e	1/4	1.63	12	44
58 26 .4	10.50	5 sch 80	f	3/8	1.63	12	44
58 27 .3	10.75	4 sch 80	e	1/4	1.63	12	44
58 27 .4	10.75	5 sch 80	f	3/8	1.63	12	44
58 32 .3	12.75	5 sch 80	f	3/8	1.88	14	44
58 32 .4	12.75	8 sch 40	g	1/4	1.88	14	44
58 36 .3	14.00	5 sch 80	f	3/8	1.63	14	44
58 36 .4	14.00	8 sch 40	g	1/4	1.63	14	44
58 37 .3	14.50	5 sch 80	f	3/8	1.75	14	44
58 37 .4	14.50	8 sch 40	g	1/4	1.75	14	44
58 41 .3	16.00	5 sch 80	f	3/8	1.88	14	44
58 41 .4	16.00	8 sch 40	g	1/4	1.88	14	44
58 42 .3	16.50	5 sch 80	f	3/8	2.00	14	44
58 42 .4	16.50	8 sch 40	g	1/4	2.00	14	44
58 46 .3	18.00	8 sch 40	g	1/4	2.13	16	44
58 46 .4	18.00	12 sch 40	h	3/8	2.13	16	44
58 51 .3	20.00	8 sch 40	g	1/4	2.38	16	44
58 51 .4	20.00	12 sch 40	h	3/8	2.38	16	44
58 56 .3	22.00	8 sch 40	g	1/4	2.63	16	44
58 56 .4	22.00	12 sch 40	h	3/8	2.63	16	44
58 61 .3	24.00	12 sch 40	h	3/8	2.88	18	46
58 66 .3	26.00	12 sch 40	h	3/8	3.13	18	46
58 71 .3	28.00	12 sch 40	h	3/8	3.25	18	46
58 76 .3	30.00	12 sch 40	h	3/8	3.50	18	46
58 81 .3	32.00	12 sch 40	h	3/8	3.75	18	46
58 91 .3	36.00	12 sch 40	h	3/8	4.25	20	46

For the selection of stanchions consult the table and diagram on page 5.15.

Stanchions for long radius elbows (R = 1.5NPS) Type 58

type ③	OD	D x s	stanchions type	a ② leg length	N	E_{min}	E_{max}
58 05 .5	1.90	1 sch 80	a	3/16	0	8	42
58 06 .5	2.37	1 sch 80	a	3/16	0.13	10	42
58 06 .6	2.37	1.5 sch 80	b	3/16	0.13	10	42
58 07 .5	2.87	1 sch 80	a	3/16	0.13	10	42
58 07 .6	2.87	1.5 sch 80	b	3/16	0.13	10	42
58 08 .5	3.00	1 sch 80	a	3/16	0.13	10	42
58 08 .6	3.00	1.5 sch 80	b	3/16	0.13	10	42
58 09 .5	3.50	1 sch 80	a	3/16	0.13	10	42
58 09 .6	3.50	1.5 sch 80	b	3/16	0.13	10	42
58 10 .5	4.25	1.5 sch 80	b	3/16	0.25	10	42
58 10 .6	4.25	2.5 sch 80	c	3/16	0.25	10	42
58 11 .5	4.50	1.5 sch 80	b	3/16	0.38	10	42
58 11 .6	4.50	2.5 sch 80	c	3/16	0.38	10	42
58 13 .5	5.25	1.5 sch 80	b	3/16	0.50	10	42
58 13 .6	5.25	2.5 sch 80	c	3/16	0.50	10	42
58 14 .5	5.50	2.5 sch 80	c	3/16	0.50	10	42
58 14 .6	5.50	3 sch 40	d	3/16	0.50	10	42
58 16 .5	6.25	2.5 sch 80	c	3/16	0.63	10	42
58 16 .6	6.25	3 sch 40	d	3/16	0.63	10	42
58 17 .5	6.63	2.5 sch 80	c	3/16	0.63	10	42
58 17 .6	6.63	3 sch 40	d	3/16	0.63	10	42
58 19 .5	7.63	3 sch 40	d	3/16	0.88	10	42
58 19 .6	7.63	4 sch 80	e	1/4	0.88	10	42
58 22 .5	8.63	3 sch 40	d	3/16	1.00	10	42
58 22 .6	8.63	4 sch 80	e	1/4	1.00	10	42
58 24 .5	9.63	3 sch 40	d	3/16	1.00	10	42
58 24 .6	9.63	4 sch 80	e	1/4	1.00	10	42
58 26 .5	10.50	4 sch 80	e	1/4	1.13	10	42
58 26 .6	10.50	5 sch 80	f	3/8	1.13	10	42
58 27 .5	10.75	4 sch 80	e	1/4	1.25	10	42
58 27 .6	10.75	5 sch 80	f	3/8	1.25	10	42
58 32 .5	12.75	5 sch 80	f	3/8	1.50	12	40
58 32 .6	12.75	8 sch 40	g	1/4	1.50	12	40
58 36 .5	14.00	5 sch 80	f	3/8	2.50	10	40
58 36 .6	14.00	8 sch 40	g	1/4	2.50	10	40
58 37 .5	14.50	5 sch 80	f	3/8	2.63	10	40
58 37 .6	14.50	8 sch 40	g	1/4	2.63	10	40
58 41 .5	16.00	5 sch 80	f	3/8	2.88	10	40
58 41 .6	16.00	8 sch 40	g	1/4	2.88	10	40
58 42 .5	16.50	5 sch 80	f	3/8	2.88	12	40
58 42 .6	16.50	8 sch 40	g	1/4	2.88	12	40
58 46 .5	18.00	8 sch 40	g	1/4	3.25	12	40
58 46 .6	18.00	12 sch 40	h	3/8	3.25	12	40
58 51 .5	20.00	8 sch 40	g	1/4	3.50	12	38
58 51 .6	20.00	12 sch 40	h	3/8	3.50	12	38
58 56 .5	22.00	8 sch 40	g	1/4	3.88	14	38
58 56 .6	22.00	12 sch 40	h	3/8	3.88	14	38
58 61 .5	24.00	12 sch 40	h	3/8	4.25	14	38
58 66 .5	26.00	12 sch 40	h	3/8	4.63	16	38
58 71 .5	28.00	12 sch 40	h	3/8	5.00	16	36
58 76 .5	30.00	12 sch 40	h	3/8	5.38	18	36
58 81 .5	32.00	12 sch 40	h	3/8	5.63	18	36
58 91 .5	36.00	12 sch 40	h	3/8	6.38	20	36

For the selection of stanchions consult the table and diagram on page 5.15.

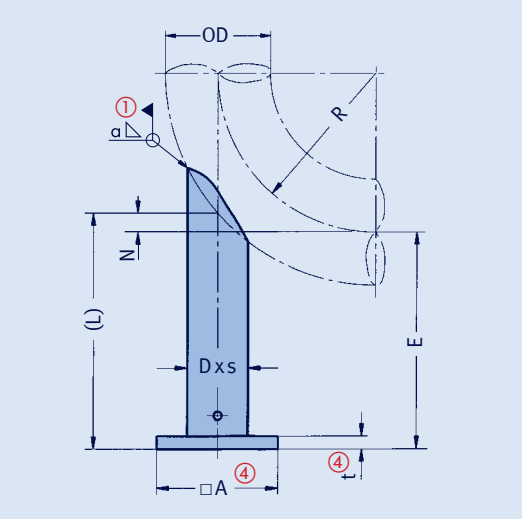

Type 58 .. 15
Type 58 .. 16

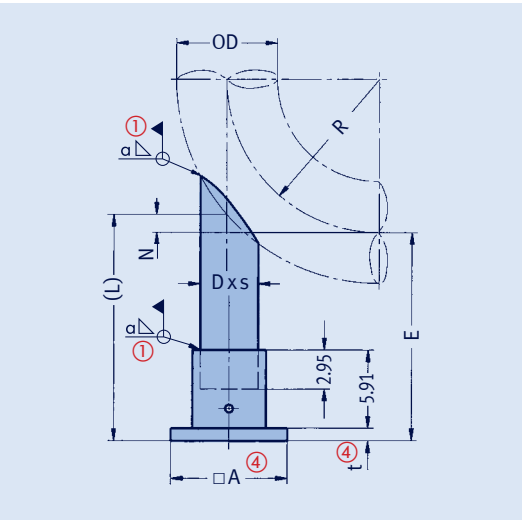

Type 58 .. 25
Type 58 .. 26

①...④ See page 5.15.

Example: Stanchion for long radius elbow radius R = 1.5NPS, OD = 16.50inch [419mm], E = 29.53inch [750mm] (as anchor). Stanchion length: L = E+N (see data in selection table)
L = 29.53inch + 2.95inch = 32.48inch
[L = 750mm +75mm = 825mm].

For stanchion D = 5.50inch [139.7mm] (designation 'f').
Permissible load = 0.37 x 5050lbs (see table on page 5.15) = 1870lbs.

Order details:
stanchion for long radius elbows
R = 1.5NPS
type 58 .. .., E = ...lbs

Stanchions Type 58

① Field weld

② The weld seam stress amounts to max. 7.25ksi [50N/mm²] for the specified weld seam thickness and permissible loads.

③ Type designation:
58 .. 1. stanchion
58 .. 2. telescopic stanchion

④ Table data A x t.

⑤ The permissible loading of the stanchion in dependence on length can be found in the diagram.

⑥ Max. lateral loading of stanchion = 100% of specified vertical load.

For welding designs of this type, the load transmission to the piping, and observing the allowable stress of the pipes must be guaranteed by the user.

Materials:
carbon steel

Surface protection:
weldable primer

pipe type	D x s	④ A x t	maximum permissible load at 176°F vertical load only [lbs]	⑤ sliding [lbs]	⑥ fixed anchor [lbs]	weight [lbs] for L = 8inch 58 .. 1.	58 .. 2.	+ per inch
a	1 sch 80	3.50 x 3/8	2130	420	240	2.9	4.0	0.18
b	1.5 sch 80	4.50 x 3/8	4940	830	510	4.6	8.8	0.30
c	2.5 sch 80	5.00 x 3/8	7640	1770	1120	7.7	9.7	0.64
d	3 sch 40	6.00 x 3/8	8990	2470	1590	8.8	14.6	0.63
e	4 sch 80	7.50 x 1/2	17530	5620	3590	17.0	23.8	1.25
f	5 sch 80	8.50 x 5/8	21580	7860	5050	25.8	34.8	1.73
g	8 sch 40	12.00 x 3/4	33720	15510	9770	48.7	59.1	2.38
h	12 sch 40	16.00 x 1	74180	41580	25400	101.0	119.3	4.46

Permissible load in dependence on length of stanchion for slide bearing or fixed point

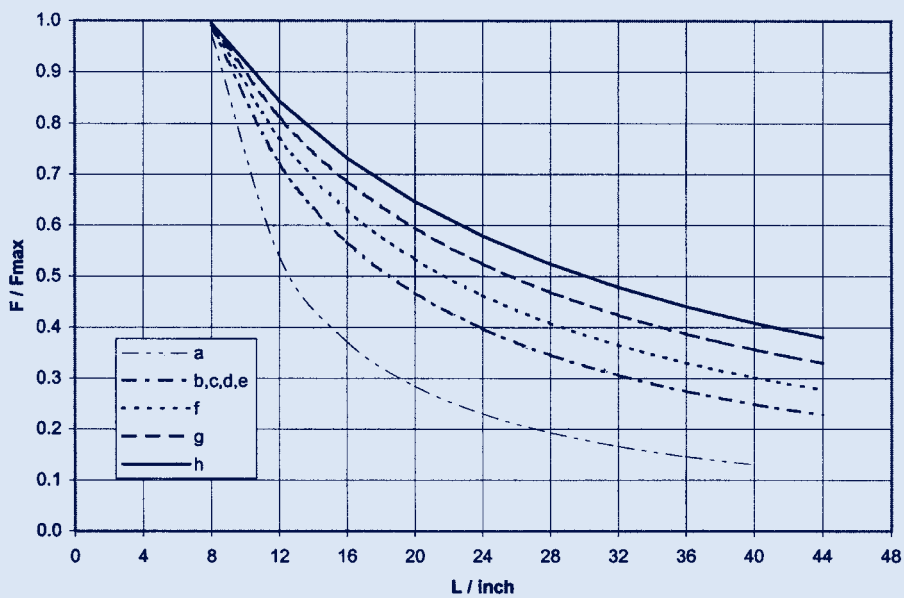

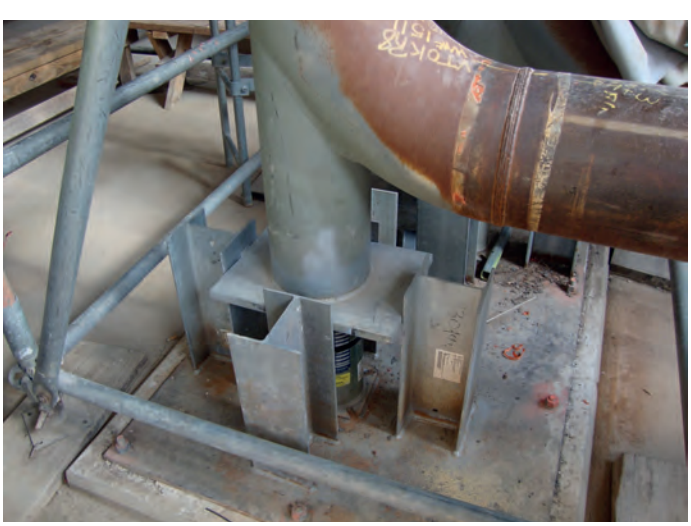

Type 58 stanchion for pipe elbows as stop free of moments in X-Y direction with type 29 spring support

Type 58 stanchions as guides for horizontally running pipe system with type 29 spring support

Threaded connecting elements

6

THREADED CONNECTING ELEMENTS

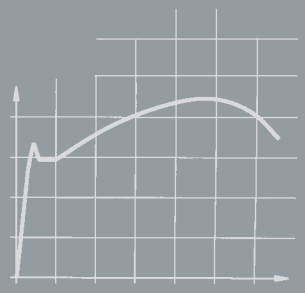

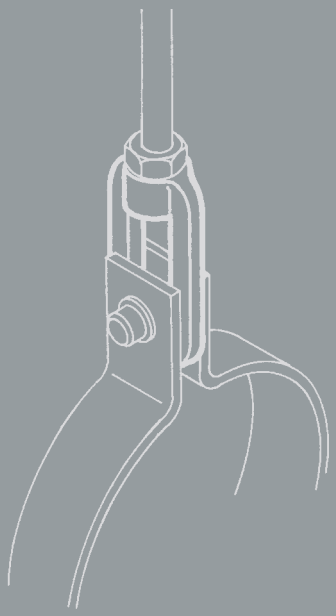

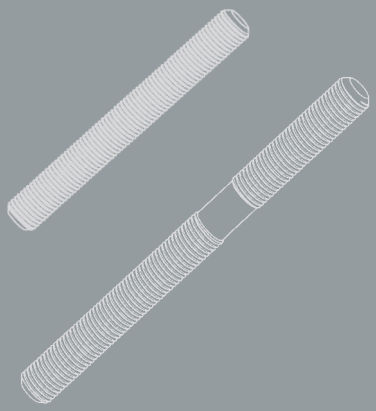

PRODUCT GROUP 6

LISEGA

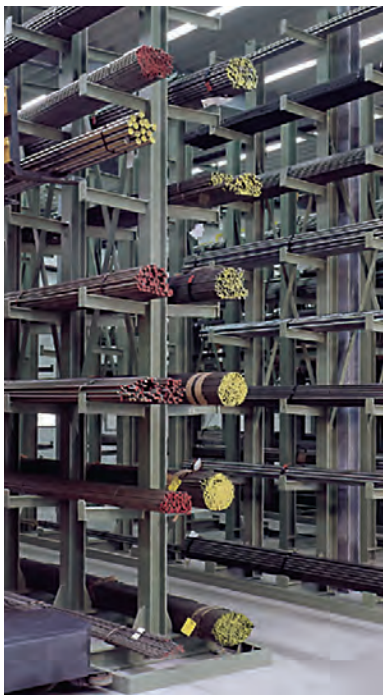
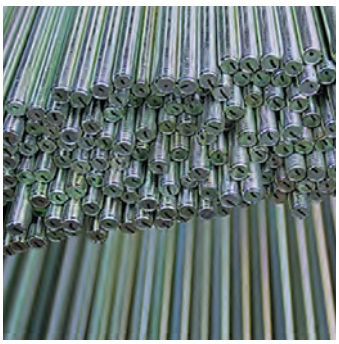

Thread connecting elements

Contents **Page**

Threaded connections type 60 to 64 . . . . . **6.1**

Selection tables **6.2**

Eye nuts type 60 . . . . . **6.2**

Threaded clevises with pin type 61 . . . . . **6.2**

Turnbuckles type 62 . . . . . **6.3**

Rod couplings type 64 . . . . . **6.3**

Connecting rods **6.4**

Selection tables **6.5**

Tie rods L/R type 65 . . . . . **6.5**

Hexagon nuts type 63 . . . . . **6.5**

Stud bolts type 67 . . . . . **6.5**

Tie rods type 66 . . . . . **6.6**

Threaded rods type 67 . . . . . **6.6**

Threaded connections Type 60 to 64

Precision-fit threads, reliable material properties and design with sufficient load reserves are prerequisites for the reliability of the whole load chain.

Eye nut type 60

Threaded clevis with pin type 61

Turnbuckle type 62

Rod coupling type 64

The connections in product group 6 are specially shaped bolting components to attach the connecting rods to other support components. They connect components in the load chains with their counterparts, such as lugs, clevis or eye plates.

The connections in product group 6 form an independent group within the modular system and were specially designed for optimum use as pipe support components.

They are largely drop forged and, except for turnbuckle type 62, so designed that they enable a little length regulation despite low installation heights.

The permissible loads correspond to the load tables for statically determined components on page 0.6 of the **technical specifications**.

Eye nut type 60 is used as a transition from a rod to a pin connection; threaded clevis with pin type 61 joins a rod to a lug connection.

Turnbuckle type 62 is fitted with a right-hand thread on one side and a left-hand thread on the other. It is used in combination with tie rod type 65 for length regulation and the pre-stressing of load chains.

If required, rod coupling type 64 is used to form rod lengths longer than 12 foot [3.66m].

All threads (except in turnbuckle type 62) are right-hand and available in both UNC and metric versions.

For corrosion protection the components are electro galvanized as standard, coating thickness approximately 0.47 – 0.59 mil [12-15µm]. For use in particularly aggressive atmospheres hot dip galvanized components can be supplied.

If required, the components can be supplied with material certificates.

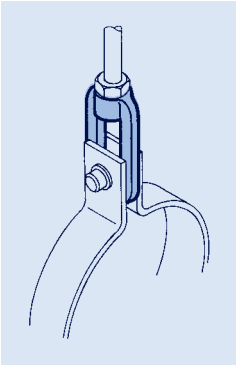

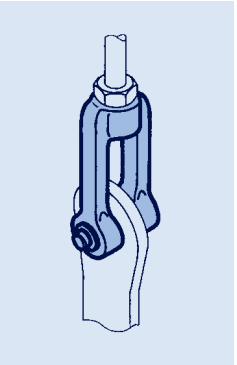

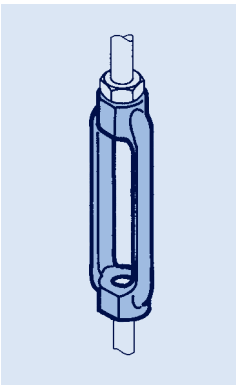

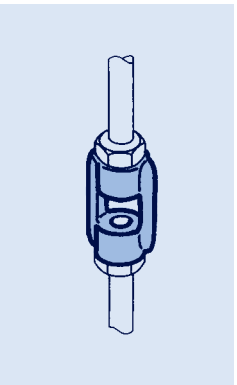

The LISEGA connections offer special benefits:

- **universal application possibilities**
- **load and connection compatibility with the LISEGA modular system**
- **drop forged and heat-treated**
- **electro galvanized as standard, hot-dip galvanized if required**
- **approval through special type tests**

Eye nuts Type 60
Threaded clevises with pin Type 61

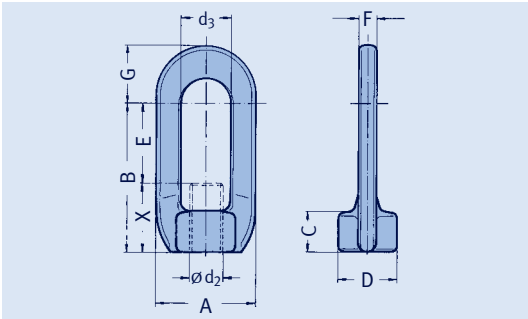

Eye nuts
type 60 D9 29 to 60 50 22

Material: carbon steel
drop forged.

From load group 40
welded design
material: carbon steel.

type	A	B	C	D	ø d_2	d_3	E	F	G	X	weight [lbs]
60 D9 29	0.94	1.57	0.43	0.67	3/8 UNC	0.51	0.98	0.20	0.59	0.59	0.1
60 29 22	1.30	2.36	0.59	0.94	1/2 UNC	0.66	1.57	0.24	0.75	0.79	0.2
60 39 22	1.73	2.95	0.79	1.18	5/8 UNC	0.98	1.77	0.39	1.02	1.18	0.4
60 49 22	2.32	3.54	0.98	1.38	3/4 UNC	1.14	2.17	0.39	1.38	1.38	0.9
60 59 22	2.83	4.33	1.18	1.73	1 UNC	1.37	2.56	0.59	1.73	1.77	1.8
60 69 22	3.46	5.00	1.46	1.97	1 1/4 UNC	1.65	2.95	0.67	2.13	2.05	2.6
60 79 22	3.94	5.51	1.77	2.36	1 1/2 UNC	1.85	2.95	0.79	2.44	2.56	4.4
60 89 22	4.33	6.18	2.05	2.76	1 3/4 UNC	2.04	3.35	0.98	2.83	2.83	6.4
60 99 22	4.72	7.09	2.36	3.15	2 UNC	2.44	3.35	1.18	3.07	3.74	10.4
60 10 22	5.31	7.87	2.56	3.74	2 1/4 UNC	2.44	4.13	1.57	3.15	3.74	17.0
60 20 22	5.91	9.06	2.76	4.13	2 1/2 UNC	2.83	5.12	1.57	3.35	3.94	19.4
60 30 22	6.30	9.06	2.76	4.33	2 3/4 UNC	2.83	5.12	1.57	3.54	3.94	20.5
60 40 22	8.66	9.84	4.72	4.92	3 UNC	3.22	3.94	1.97	4.33	5.91	60.0
60 50 22	9.84	11.02	5.51	5.51	3 1/4 UNC	3.62	4.72	2.36	4.92	6.30	99.0

Order details:
eye nut
type 60..2.

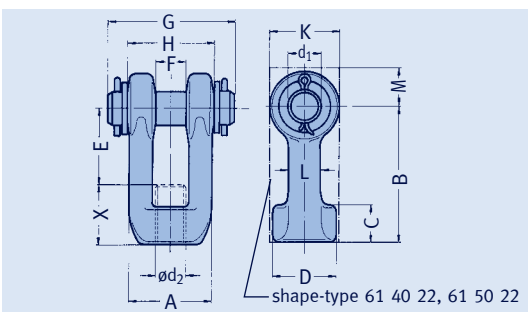

Threaded clevises with pin
type 61 D9 29 to 61 50 22

Material: carbon steel
drop forged.

From load group 40 and
further flame cut design

type	A	B	C	D	ø d_1	ø d_2	E	F	G	H	K	L	M	X	weight [lbs]
61 D9 29	0.91	1.97	0.43	0.67	0.40	3/8 UNC	1.38	0.43	1.97	0.98	0.83	0.20 x 0.35	–	0.59	0.2
61 29 22	1.30	2.76	0.59	0.98	0.48	1/2 UNC	1.97	0.47	2.36	1.34	0.94	0.31 x 0.47	–	0.79	0.4
61 39 22	1.65	3.15	0.79	1.30	0.63	5/8 UNC	1.97	0.67	2.76	1.73	1.26	0.43 x 0.59	–	1.18	0.9
61 49 22	2.17	3.54	0.98	1.57	0.79	3/4 UNC	2.17	0.79	3.54	2.24	1.81	0.63 x 0.83	–	1.38	2.2
61 59 22	2.56	4.33	1.18	1.81	0.95	1 UNC	2.56	0.87	4.13	2.68	2.09	0.75 x 0.98	–	1.77	3.5
61 69 22	2.83	5.12	1.38	2.01	1.30	1 1/4 UNC	3.15	1.06	4.92	3.15	2.52	0.75 x 1.14	–	1.97	6.0
61 79 22	3.35	5.91	1.57	2.40	1.58	1 1/2 UNC	3.54	1.26	5.51	3.66	3.15	0.87 x 1.42	–	2.36	9.7
61 89 22	3.94	6.69	1.97	2.83	1.78	1 3/4 UNC	3.94	1.46	6.50	4.33	3.54	1.06 x 1.57	–	2.76	15.9
61 99 22	4.72	7.09	2.36	3.27	1.97	2 UNC	3.74	1.65	7.28	5.12	3.94	1.30 x 1.73	–	3.35	22.9
61 10 22	5.12	8.46	2.56	3.54	2.37	2 1/4 UNC	4.72	1.97	8.27	5.91	4.72	1.18 x 1.77	–	3.74	32.6
61 20 22	6.10	9.06	2.76	4.33	2.76	2 1/2 UNC	5.12	2.36	9.65	6.89	5.91	1.38 x 2.17	–	3.94	53.8
61 30 22	6.10	9.06	2.76	4.33	2.76	2 3/4 UNC	4.92	2.36	9.65	6.89	5.91	1.38 x 2.17	–	4.13	53.8
61 40 22	5.91	9.45	3.15	–	3.15	3 UNC	5.12	2.20	9.06	5.91	5.91	–	3.54	4.33	93.0
61 50 22	6.50	10.24	3.54	–	3.55	3 1/4 UNC	5.51	2.52	9.45	6.50	7.09	–	4.33	4.72	132.0

Order details:
threaded clevis with pin
type 61..2.

Turnbuckles Type 62
Rod couplings Type 64

Turnbuckles
type 62 D9 29 to 62 50 25

Material: carbon steel drop forged.

From load group 10 flame cut design material: carbon steel.

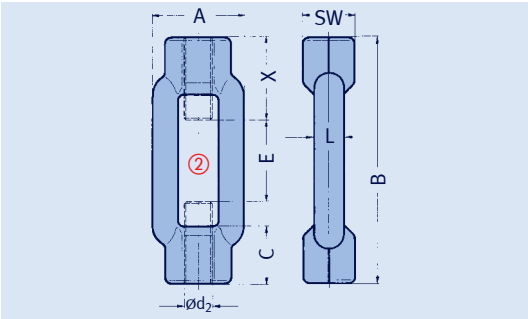

① One side right-hand, other side left-hand thread.

② The ends of the threaded rods must not come into contact.

type	A	B	C	SW	ø d_2 ①	E	L	X	weight [lbs]
62 D9 29	1.18	4.92	0.71	0.63	3/8 UNC	1.38	0.35 x 0.31	1.77	0.3
62 29 22	1.34	4.92	0.83	0.71	1/2 UNC	1.38	0.43 x 0.35	1.77	0.4
62 39 29	1.65	5.91	1.06	0.95	5/8 UNC	1.97	0.55 x 0.43	1.97	0.9
62 49 29	2.05	6.69	1.30	1.19	3/4 UNC	2.36	0.67 x 0.55	2.17	1.5
62 59 29	2.44	9.45	1.54	1.42	1 UNC	3.15	0.87 x 0.67	3.15	2.6
62 69 22	2.91	10.04	1.77	1.82	1 1/4 UNC	3.35	0.91 x 0.79	3.35	4.0
62 79 22	3.39	11.61	2.17	2.17	1 1/2 UNC	3.74	1.10 x 0.91	3.94	6.6
62 89 22	4.09	12.99	2.48	2.56	1 3/4 UNC	3.94	1.26 x 1.06	4.53	10.6
62 99 22	5.12	13.98	2.95	2.96	2 UNC	4.13	1.57 x 1.38	4.92	17.2
62 10 25	4.33	11.81	2.36	3.15	2 1/4 UNC	3.15	3.15 x 0.91	4.33	22.0
62 20 25	5.12	12.60	2.76	3.55	2 1/2 UNC	3.15	3.54 x 1.10	4.72	34.0
62 30 25	5.51	12.99	2.95	3.94	2 3/4 UNC	3.15	3.94 x 1.18	4.92	40.0
62 40 25	5.91	15.35	3.15	3.94	3 UNC	3.54	3.94 x 1.30	5.91	48.0
62 50 25	6.50	16.14	3.54	4.73	3 1/4 UNC	3.54	4.72 x 1.46	6.30	70.0

Order details:
turnbuckle
type 62..2.

Rod couplings
type 64 D9 29 to 64 50 25

Material: carbon steel drop forged.

From load group 10 flame cut design material: carbon steel.

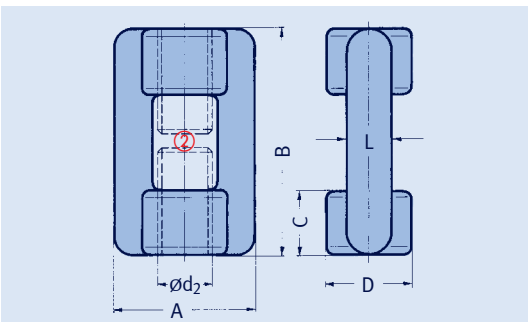

type	A	B	C	D	ø d_2	L	weight [lbs]
64 D9 29	1.34	1.77	0.59	0.83	3/8 UNC	0.43 x 0.35	0.2
64 29 28	1.34	1.77	0.59	0.83	1/2 UNC	0.43 x 0.35	0.2
64 39 28	1.65	2.36	0.79	1.06	5/8 UNC	0.55 x 0.43	0.4
64 49 28	2.05	2.95	0.98	1.26	3/4 UNC	0.67 x 0.55	1.1
64 59 28	2.44	3.54	1.18	1.54	1 UNC	0.87 x 0.67	1.5
64 69 28	2.91	4.13	1.38	1.77	1 1/4 UNC	0.91 x 0.79	2.6
64 79 28	3.39	4.72	1.57	2.17	1 1/2 UNC	1.10 x 0.91	3.5
64 89 28	4.09	5.91	1.97	2.48	1 3/4 UNC	1.26 x 1.06	5.7
64 99 28	5.12	7.09	2.36	2.95	2 UNC	1.57 x 1.38	11.2
64 10 25	4.33	7.48	2.36	3.15	2 1/4 UNC	3.15 x 0.91	16.0
64 20 25	5.12	8.66	2.76	3.54	2 1/2 UNC	3.54 x 1.10	24.0
64 30 25	5.51	9.45	2.95	3.94	2 3/4 UNC	3.94 x 1.18	30.0
64 40 25	5.91	9.84	3.15	3.94	3 UNC	3.94 x 1.30	34.0
64 50 25	6.50	11.02	3.54	4.72	3 1/4 UNC	4.72 x 1.46	50.0

Order details:
rod coupling
type 64 .. 2.

Connecting rods Type 63, 65, 66, 67

Application
Threaded and tie rods connect the support components to each other in order to bridge installation heights. They can be used as rigid supports with the connection components and in elastic load chains with spring and constant hangers.

Materials and loads
Only materials with guaranteed mechanical properties regarding good homogeneity and sufficient charpy-test values (ductility) are used. The permissible loads correspond to the load table for statically determined components in the technical specifications on page 0.6.

Rolled threads
All threads are manufactured in a rolling process. By rolling the threads are not cut. Through the rolling process the material is made to flow and is plastically formed. In this way the surface is given additional notch-free high-quality strength.

Friction resistance is thereby reduced; this has a favorable effect on any adjustment of the rods under load. On top of that, safety reserves exceeding the demands of the design specifications are created.

Designs
Threaded rods type 67 with continuous threading up to 2" UNC and tie rods type 66 (from 3/4" UNC) are available in fixed 2 feet [609.6mm] length increments in the length range from 2 feet up to 12 feet [0.61m up to 3.66m]. The tie rods have thread lengths of 12 inch [305mm] on one side and 24 inch [610mm] on the other. The short thread is for length adjustment, e.g. as a connection for spring and constant hangers. The long thread is for the fitted length. This can be shortened as required according to the installation height on site.

Standard lengths
Larger tolerances in the building structure have led to increasing problems with fitted lengths instead of easier installation, especially when the connection threads are too short. The use of standardized fixed lengths is therefore more and more common because of their greater flexibility. Fitting can be easily carried out with hanging rods already mounted at the upper end.

Laborious measurement with the risk of error is thereby avoided. Structural tolerances can be compensated for.

Length adjustment
Tie rods type 65 with right-hand / left-hand threads are always used in combination with turnbuckle type 62 and fitted with standard lengths. They are designed for length adjustment and force-fit prestressing of load chains.

All other bolted connections are exclusively right-hand threads and on installation must be locked with a hexagon nut type 63.

Corrosion protection
For corrosion protection all rod types are electro galvanized, layer thickness approx. 0.47– 0.59 mil [12-15µm]. If required, hot-dip galvanization is available.

Hot dip galvanized threaded rods 3/4" UNC / 1/2" UNC are available in lengths up to 4 ft [1219mm]. Longer length can be prepared by rod couplings.

Certification
If required, all components can be supplied with certificates.

Special properties:

- **materials with proven characteristics**
- **rolled threads**
- **notch-free surfaces**
- **electro galvanized surfaces**
- **standard lengths**
- **in-house manufacture**

The pipe systems are embedded in load chains, where the connecting rods are important elements. When selecting them great attention must be paid to quality so that these seemingly simple components do not form the weakest link in the chain. The decisive factors for their load-bearing capacity are, beside adequate dimensioning, material quality and design conforming to standards.

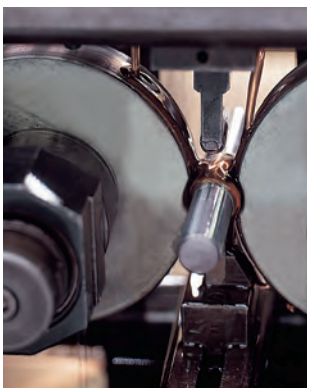

Manufacture of threaded components

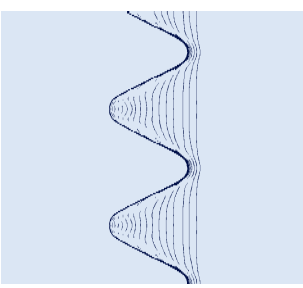

Fiber flow of rolled thread

Tie rods L/R Type 65
Hexagon nuts Type 63
Stud bolts Type 67

Tie rods left-hand/right-hand type 65 D1 29 to 65 50 23

Material:
3/8 UNC to 2 UNC: A36
2 1/4 UNC to 3 1/4 UNC: A675Gr.70

LISEGA threaded rods should only be replaced in kind.

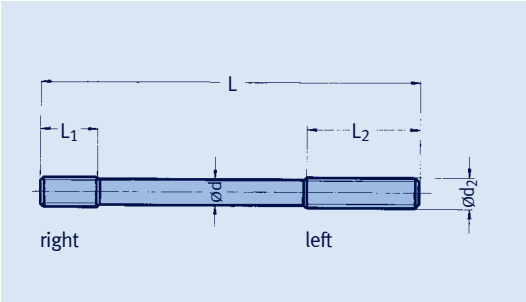

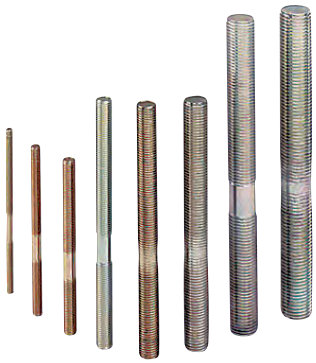

type	ø d	ø d_2	L	L_1 right	L_2 left	weight [lbs]
65 D1 29	0.33	3/8 UNC	9.84	3.15	5.12	0.25
65 21 23	0.45	1/2 UNC	9.84	3.15	5.12	0.45
65 31 23	0.56	5/8 UNC	9.84	3.15	5.12	0.70
65 41 23	0.68	3/4 UNC	9.84	3.15	5.12	1.05
65 51 23	0.91	1 UNC	13.78	4.72	7.48	2.60
65 61 23	1.15	1 1/4 UNC	13.78	4.72	7.48	4.15
65 71 23	1.39	1 1/2 UNC	13.78	4.72	7.48	6.00
65 81 23	1.62	1 3/4 UNC	17.72	6.30	8.66	10.50
65 91 23	1.85	2 UNC	17.72	6.30	8.66	13.70
65 10 23	2.10	2 1/4 UNC	21.65	7.87	10.63	21.70
65 20 23	2.33	2 1/2 UNC	21.65	7.87	10.63	26.70
65 30 23	2.58	2 3/4 UNC	21.65	7.87	10.63	32.70
65 40 23	2.83	3 UNC	23.62	8.66	11.81	42.90
65 50 23	3.08	3 1/4 UNC	23.62	8.66	11.81	50.90

Order details:
tie rod L/R
type 65..2.

Hexagon nuts type 63 D9 19 to 63 50 18

Material: carbon steel
Hexagon nuts as counter nuts for tie rods and threaded rods 3/8 UNC to 3 1/4 UNC.

type	size	weight [lbs]
63 D9 19	3/8 UNC	0.03
63 29 18	1/2 UNC	0.07
63 39 18	5/8 UNC	0.12
63 49 18	3/4 UNC	0.20
63 59 18	1 UNC	0.45
63 69 18	1 1/4 UNC	0.83
63 79 18	1 1/2 UNC	1.40
63 89 18	1 3/4 UNC	2.15
63 99 18	2 UNC	3.20
63 10 18	2 1/4 UNC	4.40
63 20 18	2 1/2 UNC	6.00
63 30 18	2 3/4 UNC	7.90
63 40 18	3 UNC	10.10
63 50 18	3 1/4 UNC	12.70

Order details:
hexagon nut
type 63..1.

Stud bolts type 67 D1 29 to 67 91 23

Material: A36

LISEGA threaded rods should only be replaced in kind.

type	L	ø d_2	weight [lbs]
67 D1 29	1.18	3/8 UNC	0.03
67 21 23	1.38	1/2 UNC	0.06
67 31 23	1.97	5/8 UNC	0.14
67 41 23	2.36	3/4 UNC	0.25
67 51 23	2.95	1 UNC	0.56
67 61 23	3.54	1 1/4 UNC	1.05
67 71 23	4.33	1 1/2 UNC	1.90
67 81 23	4.92	1 3/4 UNC	2.85
67 91 23	5.71	2 UNC	4.40

Order details:
stud bolt
type 67..1.

Tie rods Type 66
Threaded rods Type 67

threaded rod type 67

tie rod type 66

Threaded rods / tie rods type 67 D2 29 to 67 50 23 / type 66 46 23 to 66 50 23

Material:
3/8 UNC to 2 UNC: A36
2 1/4 UNC to 3 1/4 UNC: A675Gr.70

LISEGA threaded rods should only be replaced in kind.

Standard lengths avoid problems caused when installation lengths are too short. They can be flexibly adapted by shortening to suit the installation situation on site.

ød2	type designation at L= (in feet) 2	4	6	8	10	12	weight per foot [lbs]
3/8 UNC	67 D2 29	67 D3 29	67 D4 29	67 D5 29	67 D6 29	67 D7 29	0.30
1/2 UNC	67 22 23	67 23 23	67 24 23	67 25 23	67 26 23	67 27 23	0.53
5/8 UNC	67 32 23	67 33 23	67 34 23	67 35 23	67 36 23	67 37 23	0.85
3/4 UNC	67 42 23	67 43 23	67 44 23	67 45 23	67 46 23 ①	67 47 23 ①	1.25
1 UNC	67 52 23	67 53 23	67 54 23	67 55 23	67 56 23 ①	67 57 23 ①	2.25
1 1/4 UNC	67 62 23	67 63 23	67 64 23	67 65 23	67 67 23 ①	67 67 23 ①	3.55
1 1/2 UNC	67 72 23	67 73 23	67 74 23	67 75 23	67 76 23 ①	67 77 23 ①	5.15
1 3/4 UNC	67 82 23	67 83 23	67 84 23	67 85 23	67 86 23 ①	67 87 23 ①	7.00
2 UNC	67 92 23	67 93 23	67 94 23	67 95 23	67 96 23 ①	67 97 23 ①	9.20

① On request, these types can supplied as tie rods type 66.

Order details:
threaded rod / tie rod
type 6. .. ..

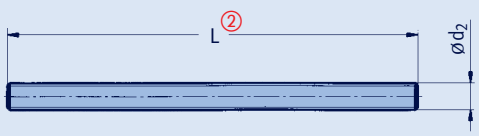

threaded rod type 67

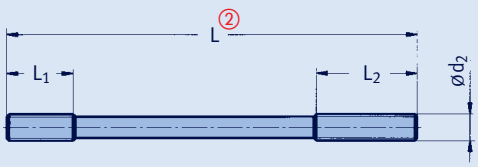

tie rod type 66

② L=max. 236inch, longer lengths on request

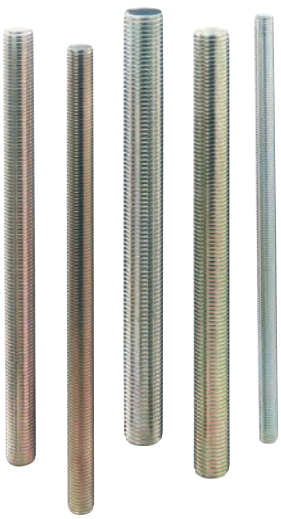

Connecting rods from 2 1/4" UNC upwards can be supplied as threaded rods type 67 or as tie rods type 66 with individual rolled thread lengths.

Ød2	type designation (L / L1 / L2 please note at order)		weight per foot [lbs]
2 1/4 UNC	66 10 23	67 10 23	11.8
2 1/2 UNC	66 20 23	67 20 23	14.6
2 3/4 UNC	66 30 23	67 30 23	17.9
3 UNC	66 40 23	67 40 23	21.5
3 1/4 UNC	66 50 23	67 50 23	25.4

Order details at 2 1/4 UNC:
threaded rod / tie rod
type 6. .. ..
L = ...inch
L_1 = ...inch
L_2 = ...inch

Structural attachments, trapezes, clamps, slide plates

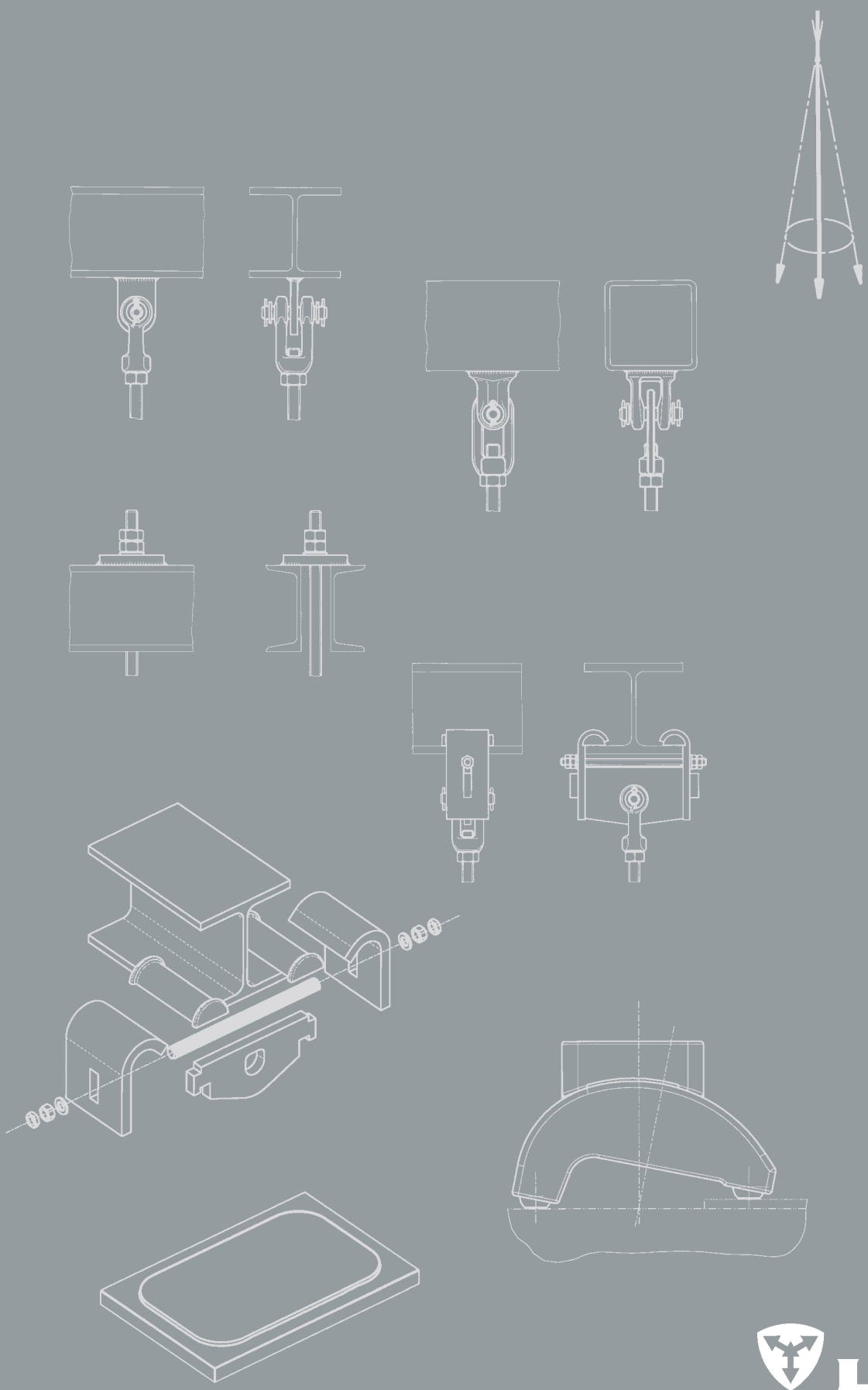

LISEGA

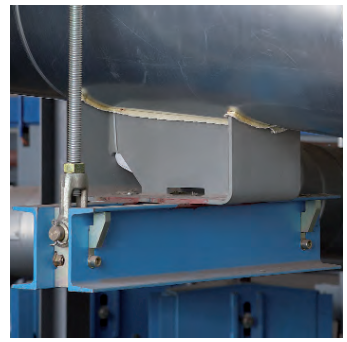

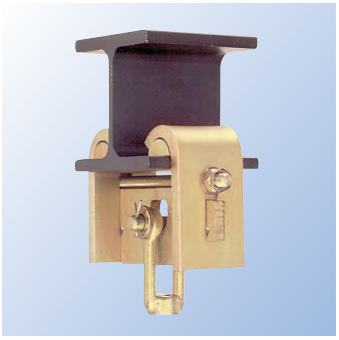

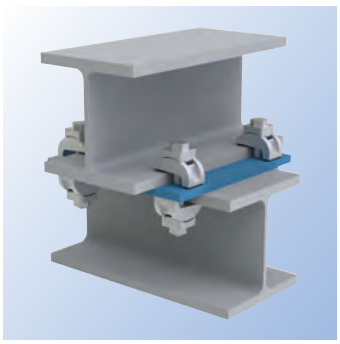

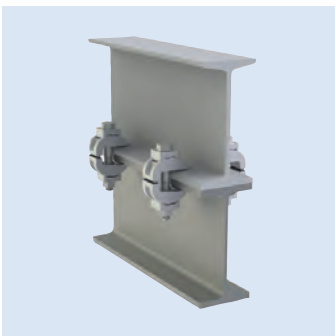

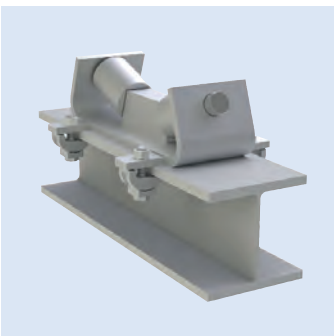

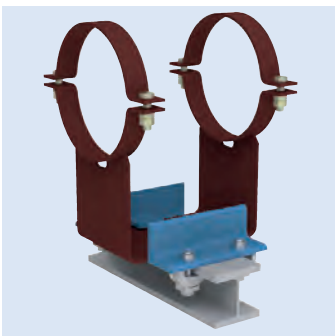

Structural attachments, trapezes, clamps, slide plates

Contents **Page**

Structural attachments, trapezes **7.1**

Weld-on clevises type 73 . . . . . **7.2**

Weld-on eye plates type 75 . . . . . **7.2**

Weld-on plates with spherical washer type 74 . . . . . **7.3**

Clamps and trapezes **7.4**

Beam clamps type 78 . . . . . **7.4**

Trapezes type 79 . . . . . **7.4**

Beam adapters type 76 . . . . . **7.6**

Guides with beam adapters type 76 for clamp bases type 49 . . . . . **7.8**

Cantilevers with beam adapters type 76 . . . . . **7.8**

Slide plates **7.10**

Instructions on assembly and installation **7.12**

Slide plates to weld-on type 70 . . . . . **7.13**

Slide plates for bolting type 70 . . . . . **7.15**

Structural attachments, trapezes, clamps, slide plates

Special components for welding or clamping are available for connecting the pipe supports to the supporting structure. In order to fulfill safety requirements the connections must be suitable.

Product group 7

Connecting components for the direct attachment to the structure and trapezes form part of product group 7.

The permissible loads for the components correspond to the load table for statically determined components in the 'technical specifications', page 0.6.

For weld-on clevises type 73 – well suited for connection to hollow sections - and weld-on eye plates type 75 the specified minimum weld seam thicknesses must be taken into account. These are calculated not to exceed a maximum weld seam stress of 10.9 ksi [75N/mm²] (load case H / level A/B). An angulation of up to 6° was considered in the basis of the load calculation.

The weld-on plates type 74 enable use of the maximum pendulum length in restricted spaces by means of a plug connection. Here too, an angulation of up to 6° was considered in the basis of the load calculation.

The hot dip galvanized beam adapters type 76 allow clamp connections instead of welded connections, for example at extensions of piping systems or steel structures in existing plants.

Beam clamps type 78 are designed for **weld-free** connection on site. They are suitable for all beam widths and flange slopes. When ordering, please state beam widths and flange thicknesses.

For protection against corrosion the components are given a weldable primer coating (1.18 mil [30µm]) or are electro galvanized (layer thickness 0.47 – 0.59 mil [12–15µm]).

Trapezes type 79 are for the attachment of clamp bases type 49 and type 56 and can be used for rigid suspension as well as for connection with spring and constant hangers.

The trapeze profiles are protected against corrosion according to LISEGA standard color coating (see page 0.10).

All components can on request be supplied with material certifications.

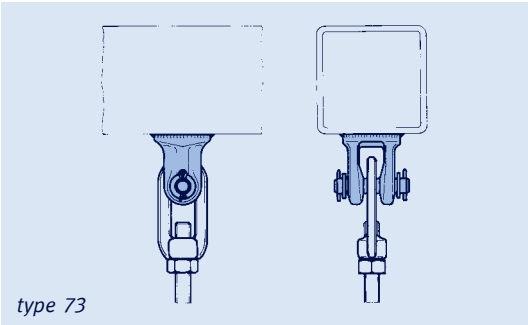

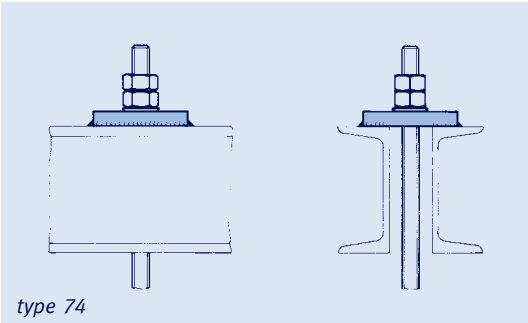

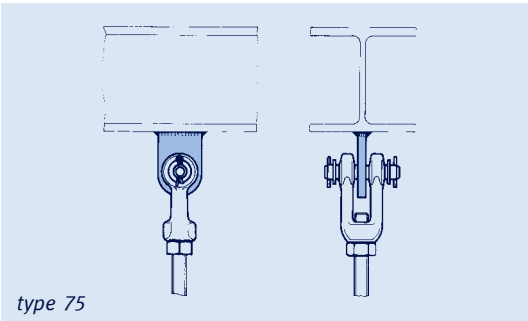

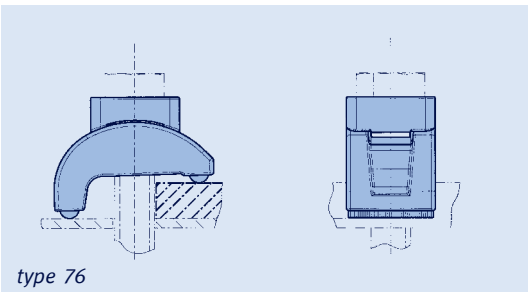

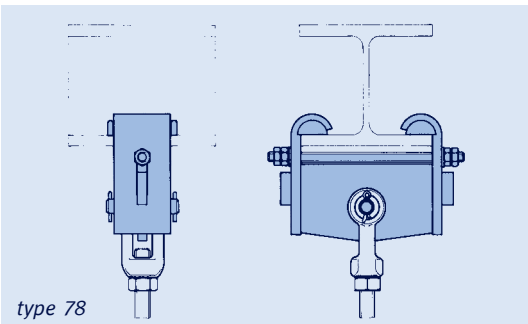

Standardized connection possibilities

Weld-on clevises Type 73
Weld-on eye plates Type 75

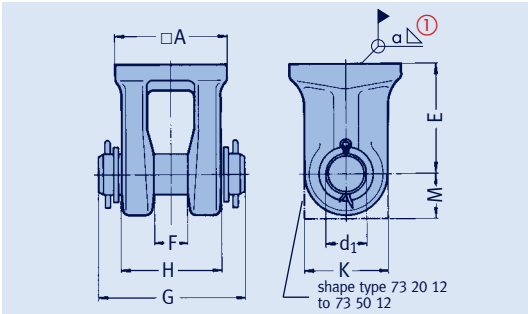

Weld-on clevises
type 73 29 13 to 73 50 12

Material:
carbon steel drop forged.

From load group 20:
flame cut design.

type	□A	ød_1	E	F	G	H	K	M	min. weld seam (leg length) ①	weight [lbs]
73 29 13	1.57	0.48	1.38	0.47	2.36	1.34	0.94	–	3/16	0.7
73 39 13	1.97	0.63	1.57	0.67	2.76	1.73	1.26	–	3/16	0.9
73 49 13	2.56	0.79	1.97	0.79	3.54	2.24	1.81	–	3/16	2.4
73 59 13	2.95	0.95	2.36	0.87	4.13	2.68	2.09	–	3/16	4.6
73 69 12	3.74	1.30	3.54	1.06	4.92	3.15	2.52	–	1/4	8.4
73 79 12	4.72	1.58	4.33	1.26	5.51	3.66	3.15	–	1/4	15.0
73 89 12	4.72	1.78	4.72	1.46	6.50	4.33	3.54	–	5/16	20.3
73 99 12	4.72	1.97	5.12	1.65	7.28	4.72	3.94	–	7/16	24.5
73 10 12	5.91	2.37	5.51	1.97	8.27	5.91	4.72	–	1/2	40.8
73 20 12	6.69x6.89	2.76	5.91	2.36	9.65	6.50	6.69	2.95	9/16	82.0
73 30 12	6.69x6.89	2.76	5.91	2.36	9.65	6.50	6.69	2.95	5/8	82.0
73 40 12	5.91x7.48	3.15	6.69	2.20	9.06	5.91	5.91	3.54	3/4	84.0
73 50 12	7.09x8.66	3.55	7.68	2.52	9.45	6.50	7.09	4.33	13/16	128.0

① Calculation of the weld seams was based on a permissible stress of 10.9 ksi [75N/mm²] in load case H (level A/B).

Order details:
weld-on clevis 73 .. 1.

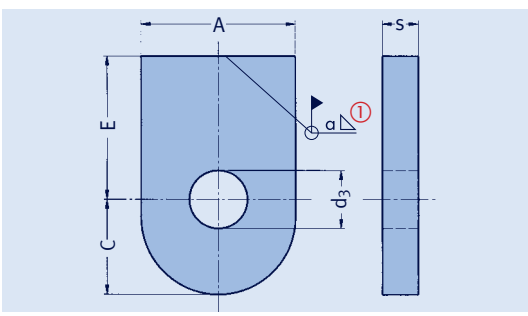

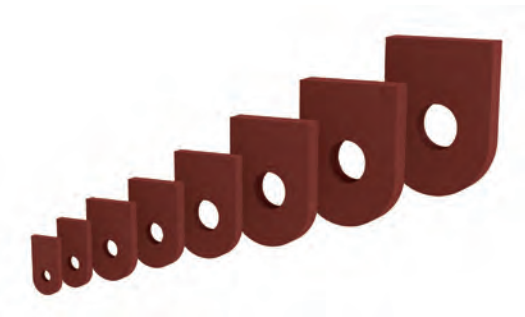

Weld-on eye plates
type 75 D1 19 to 75 50 12

Material: carbon steel.

type	A	ød_3	E	C	s	min. weld seam (leg length) ①	weight [lbs]
75 D1 19	1.18	0.41	1.57	0.71	0.24	3/16	0.22
75 21 12	1.38	0.49	1.77	0.87	0.31	1/4	0.28
75 31 12	1.77	0.64	1.97	1.10	0.39	5/16	0.52
75 41 12	2.36	0.80	2.17	1.46	0.47	3/8	1.00
75 51 12	2.56	0.96	2.36	1.57	0.59	7/16	1.44
75 61 12	3.15	1.33	2.76	1.97	0.79	1/2	2.76
75 71 12	3.94	1.61	3.15	2.56	0.98	9/16	5.18
75 81 12	4.72	1.81	3.54	2.95	1.18	5/8	8.60
75 91 12	5.12	2.00	3.94	3.15	1.18	13/16	10.20
75 10 12	5.91	2.40	4.33	3.54	1.57	7/8	17.00
75 20 12	6.69	2.79	4.72	3.94	1.77	1 1/16	23.40
75 30 12	7.09	2.79	5.12	4.33	1.77	1 3/16	27.80
75 40 12	8.66	3.18	5.51	4.72	1.97	1 1/16	40.80
75 50 12	9.84	3.58	5.91	5.31	2.36	1 1/8	60.60

① Calculation of the weld seams was based on a permissible stress of 10.9 ksi [75 N/mm²] in load case H (level A/B).

Order details:
weld-on eye plate
type 75 .. 1.

Weld-on plates with spherical washer Type 74

Weld-on plates with spherical washer type 74 D1 19 to 74 50 13

Material carbon steel

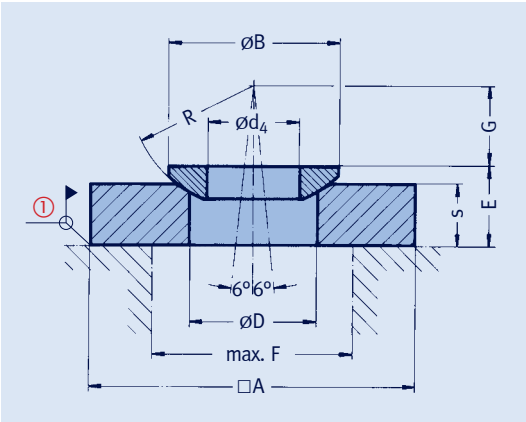

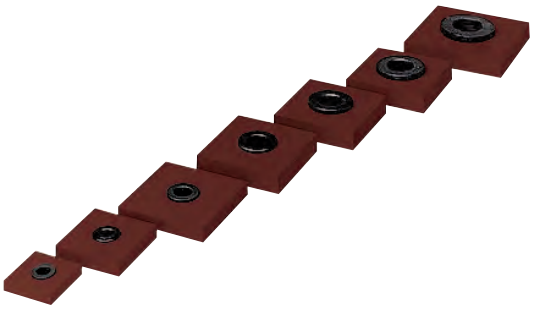

① LISEGA recommends tack welding of the weld-on plate for fixing positions or welding all round as specified.

type	for rod	□A	øB	øD	ød4	E	max. F	G	R	s	weight [lbs]
74 D1 19	3/8 UNC	2.36	0.83	0.59	0.41	0.47	1.38	0.39	0.59	0.39	0.6
74 21 13	1/2 UNC	2.76	0.94	0.71	0.51	0.67	1.57	0.43	0.67	0.59	1.4
74 31 13	5/8 UNC	2.76	1.18	0.98	0.67	0.67	1.77	0.59	0.87	0.59	1.4
74 32 13	5/8 UNC	3.74	1.18	0.98	0.67	0.87	1.77	0.59	0.87	0.79	3.0
74 33 13	5/8 UNC	5.12	1.18	0.98	0.67	0.87	1.77	0.59	0.87	0.79	6.0
74 41 13	3/4 UNC	2.76	1.42	1.18	0.83	0.71	1.97	0.71	1.06	0.59	1.4
74 42 13	3/4 UNC	3.74	1.42	1.18	0.83	0.91	1.97	0.71	1.06	0.79	3.0
74 43 13	3/4 UNC	5.12	1.42	1.18	0.83	0.91	1.97	0.71	1.06	0.79	6.0
74 51 13	1 UNC	3.74	1.73	1.38	0.98	0.94	2.17	0.83	1.26	0.79	3.0
74 52 13	1 UNC	5.12	1.73	1.38	0.98	0.94	2.17	0.83	1.26	0.79	6.0
74 61 13	1 1/4 UNC	5.12	2.20	1.77	1.22	1.38	2.36	1.06	1.61	1.18	8.8
74 62 13	1 1/4 UNC	6.69	2.20	1.77	1.22	1.38	2.36	1.06	1.61	1.18	15.0
74 71 13	1 1/2 UNC	5.12	2.68	1.97	1.46	1.46	2.76	1.26	1.97	1.18	8.8
74 72 13	1 1/2 UNC	6.69	2.68	1.97	1.46	1.46	2.76	1.26	1.97	1.18	15.0
74 81 13	1 3/4 UNC	5.12	3.07	2.32	1.69	1.54	3.54	1.46	2.28	1.18	8.8
74 82 13	1 3/4 UNC	6.69	3.07	2.32	1.69	1.54	3.54	1.46	2.28	1.18	15.0
74 91 13	2 UNC	5.12	3.62	2.60	1.97	1.81	4.72	1.61	2.64	1.38	10.0
74 92 13	2 UNC	6.69	3.62	2.60	1.97	1.61	4.72	1.61	2.64	1.18	15.0
74 10 13	2 1/4 UNC	8.86	4.06	2.99	2.28	1.85	5.51	1.97	3.11	1.38	30.6
74 20 13	2 1/2 UNC	9.84	4.72	3.50	2.60	2.13	5.91	2.32	3.66	1.57	43.2
74 30 13	2 3/4 UNC	9.84	5.04	3.74	2.76	2.40	6.30	2.52	3.94	1.77	48.6
74 40 13	3 UNC	11.81	5.35	3.86	2.95	2.40	6.30	2.76	4.21	1.77	70.2
74 50 13	3 1/4 UNC	13.78	5.98	4.33	3.27	2.52	7.09	3.07	4.72	1.77	95.4

Order details:
weld-on plate with spherical washer type 74 .. 1.

Beam clamps Type 78
Trapezes Type 79

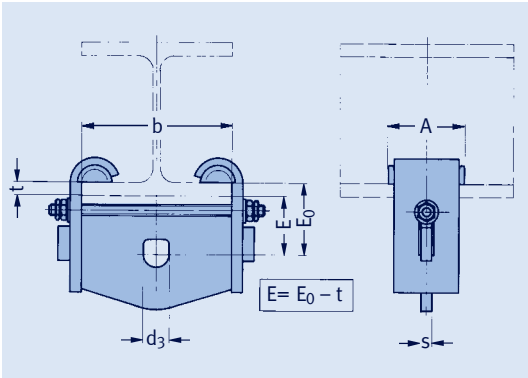

Trägerklammern
Typ 78 21 11 bis 78 71 11

Surface: electro galvanized

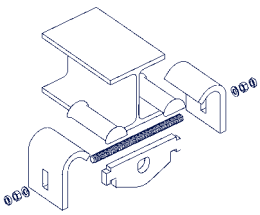

type	d_3	A	E_0 up to beam with b = 1.81	3.23	3.94	4.92	5.51	7.09	8.66	10.24	11.81	s	t_{max} ②	weight [lbs]
78 21 11	0.65	3.15	2.17	2.17	2.56	2.56	2.56	2.95	3.35	3.74	3.74	0.31	0.59	1.8 – 4.0
78 31 11	0.81	3.15	–	2.76	2.76	2.76	2.76	3.15	3.54	3.94	4.33	0.39	0.79	4.4 – 8.0
78 41 11	1.00	4.92	–	–	–	3.35	3.54	3.54	3.94	4.13	4.53	0.59	0.98	14.8 – 19.6
78 51 11	1.34	4.92	–	–	–	3.74	3.74	4.13	4.53	5.12	5.51	0.59	0.98	15.0 – 21.0
78 61 11	1.60	7.09	–	–	–	–	–	3.94	3.94	4.33	4.33	0.79	1.18	39.0 – 43.6
78 71 11 ①	2.00	7.09	–	–	–	–	–	4.53	4.53	4.92	5.12	0.79	1.18	40.2 – 45.8

① Load sizes 8 + 9 can also be connected. The permissible load amounts to 22481 lbs [100kN] in load case H (level A/B).

② Larger 't' dimension possible on request – E_0 increases correspondingly. When ordering please state beam width 'b' and flange thickness 't'.

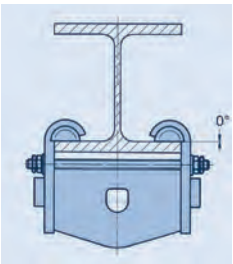

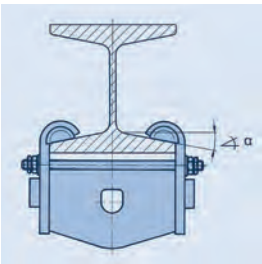

Order details:
beam clamp
type 78 .1 11
beam width b = ...inch
flange thickness t = ...inch

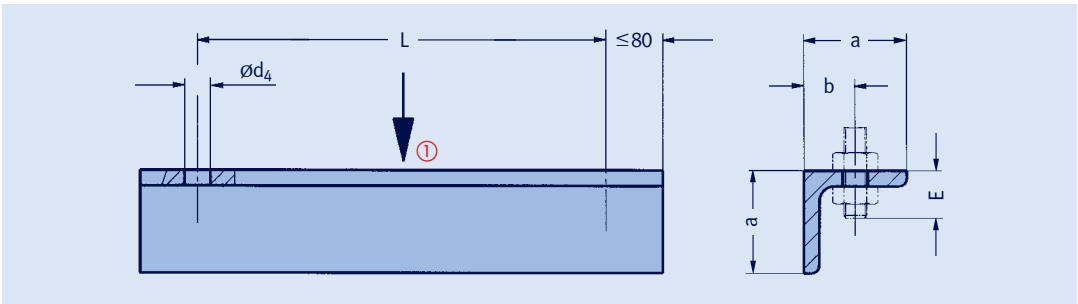

Trapezes for the use of lower loads at temperatures ≤176°F [80°C] type 79 C2 37 to 79 42 37

① The permissible center load is to be taken from the respective trapeze load group (3rd digit in the type designation).

type	L_{max}	E	a	b	ød_4	weight [lbs] for L = 20inch	± per inch
79 C2 37	40	0.98	1.57	0.87	0.43	4.3	0.20
79 D2 37	40	0.98	2.36	0.98	0.43	7.9	0.34
79 12 37	24	0.98	2.36	0.98	0.43	7.9	0.34
79 12 37	40	0.98	2.76	1.10	0.43	9.8	0.41
79 22 37	24	1.18	2.76	1.10	0.55	9.8	0.41
79 22 37	44	1.18	3.15	1.26	0.55	14.4	0.60
79 32 37	24	1.18	3.15	1.26	0.55	14.4	0.60
79 32 37	48	1.18	3.94	1.38	0.55	20.6	0.82
79 42 37	24	1.57	3.94	1.50	0.71	20.6	0.82
79 42 37	48	1.57	5.12	1.65	0.71	36.1	1.35

Order details:
trapeze
type 79 .2 37, L = ...inch

Trapezes
Type 79

Trapezes
type 79 22 34 to 79 20 34

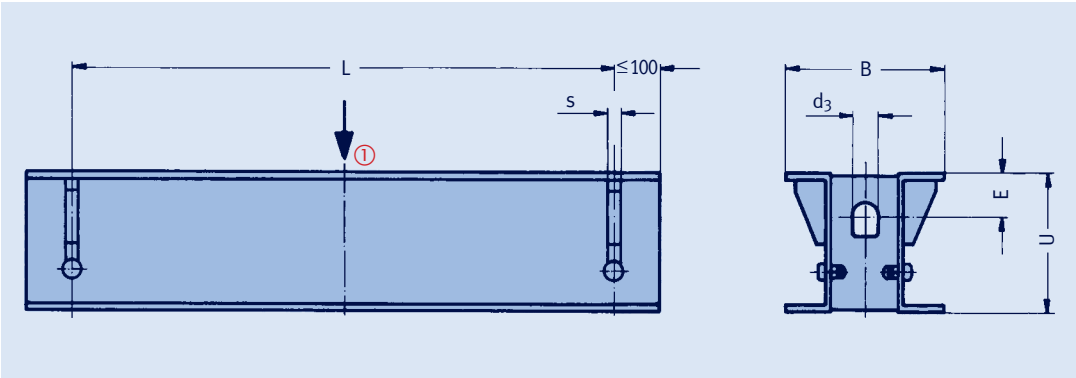

① The permissible center load is to be taken from the respective trapeze load group (3rd digit or 3rd and 4th digits in the type designation).

② The L_{max} dimensions can be lengthened up to 94.49 inch [2400mm] on load reduction of 5% per 3.94 inch [100mm] extension.

③ Connection possible for the specified load groups.

type	load ③ group	d_3 ≥	s ≤	L_{max} ②	E	U	B	weight [lbs] for L = 3 feet	± per inch
79 22 34	D – 4	0.81	3/8	67.00	0.75	4	5.50	50	1.20
79 32 34	D – 4	0.81	3/8	67.00	0.75	4	5.50	50	1.20
79 42 34	3 – 4	0.81	1/2	35.50 70.75	0.75 1.63	4 6	5.50 7.50	50 76	1.20 1.74
79 52 34	4 – 5	1.00	3/4	55.00 70.75	1.63 1.63	6 6	7.50 7.50	76 92	1.74 2.00
79 62 34	5 – 6	1.34	13/16	49.25 70.75	1.63 2.13	6 8	8.13 8.13	92 144	2.00 3.12
79 72 34	6 – 7	1.60	1	55.00 70.75	2.38 2.50	8 8	9.50 9.87	144 152	3.12 3.12
79 82 34	6 – 8	1.80	1	49.25 94.50	2.75 3.13	8 10 1/4	9.87 13.00	152 240	3.12 4.74
79 92 34	7 – 9	2.00	1 1/4	70.75 94.50	3.38 3.50	10 1/4 12	13.00 13.75	240 286	4.74 5.15
79 10 34	8 – 10	2.40	1 1/4	78.75	3.75	12	13.75	286	5.15
79 20 34	9 – 10	2.40	1 1/4	70.75	3.75	12	14.00	390	7.50

Order details:
trapeze
type 79 .. 34, L = ...inch

Trapezes
type 79 23 39 to 79 93 39

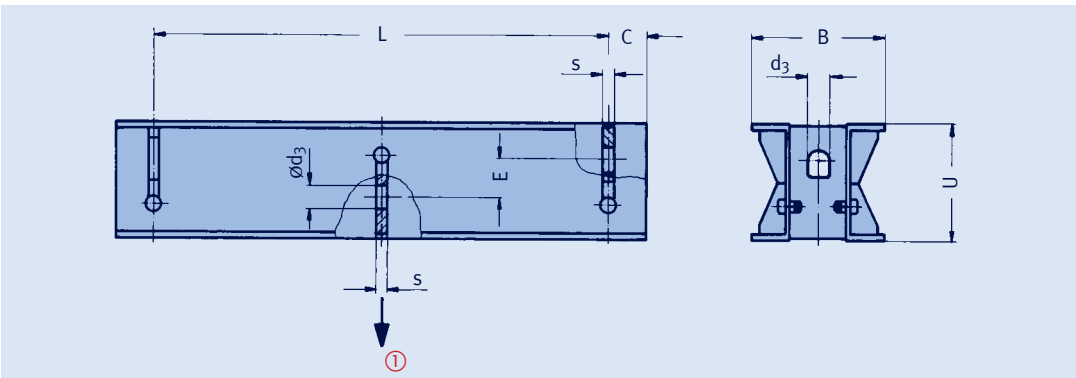

① The permissible load for the middle connection is to be taken from the respective trapeze load group (3rd digit in the type designation).

② L_{max} can be lengthened to 94.49 inch [2400mm] for type 79 23 39 to 79 73 39 on reduction of the permissible load by 5% for every 3.94 inch [100mm].

③ Connection possible for the specified load groups.

type	load ③ group	d_3	L_{max} ②	E	U	B	C	s	weight [lbs] for L = 3 feet	± per inch
79 23 39	D – 4	0.81	67.00	2.00	4	5.50	1.63	3/8	50	1.20
79 33 39	D – 4	0.81	67.00	2.00	4	5.50	1.63	3/8	50	1.20
79 43 39	3 – 5	1.00	70.75	2.75	6	7.50	2.00	1/2	80	1.74
79 53 39	4 – 6	1.34	70.75	2.38	6	8.13	2.38	3/4	96	2.00
79 63 39	5 – 7	1.60	70.75	3.13	8	9.50	2.88	13/16	152	3.12
79 73 39	6 – 8	1.80	70.75	2.50	8	9.81	3.25	1	154	3.12
79 83 39	6 – 9	2.00	94.50	3.75	10 1/4	13.00	3.63	1	258	4.74
79 93 39	7 – 10	2.40	94.50	4.75	12	13.75	4.00	1 1/4	316	5.16

On request types 79 10 39 and 79 20 39 can be delivered.

Order details:
trapeze
type 79 .3 39, L = ...inch

Beam adapters Type 76

On alterations or extensions of the pipe systems or steelwork in existing plants, clamp connections are frequently preferred to welded connections. Clamp connections are strictly specified in cases where welding connections are excluded for safety reasons.

The safety of the clamping effect of such connections depends essentially on the nature of the existing contact surfaces and the prestressing forces applied. The design of the clamping components used is therefore decisive for a reliable connection.

For the creation of safe and reliable clamp connections LISEGA offers the beam adapter system type 76. These components enable the connection of very different components to existing steelwork without welding or drilling.

Assembly is simple and timesaving. On tightening, LISEGA beam adapters adjust independently to the existing beam thickness.

If the specified tightening torques are observed, lasting security of the connections is guaranteed. Any corrosion protection already present, such as hot-dip galvanization or paint coatings, incurs no damage.

The special support segments are the main feature of the LISEGA beam adapters. Due to their shape they automatically adapt to any position and to existing profile angles.

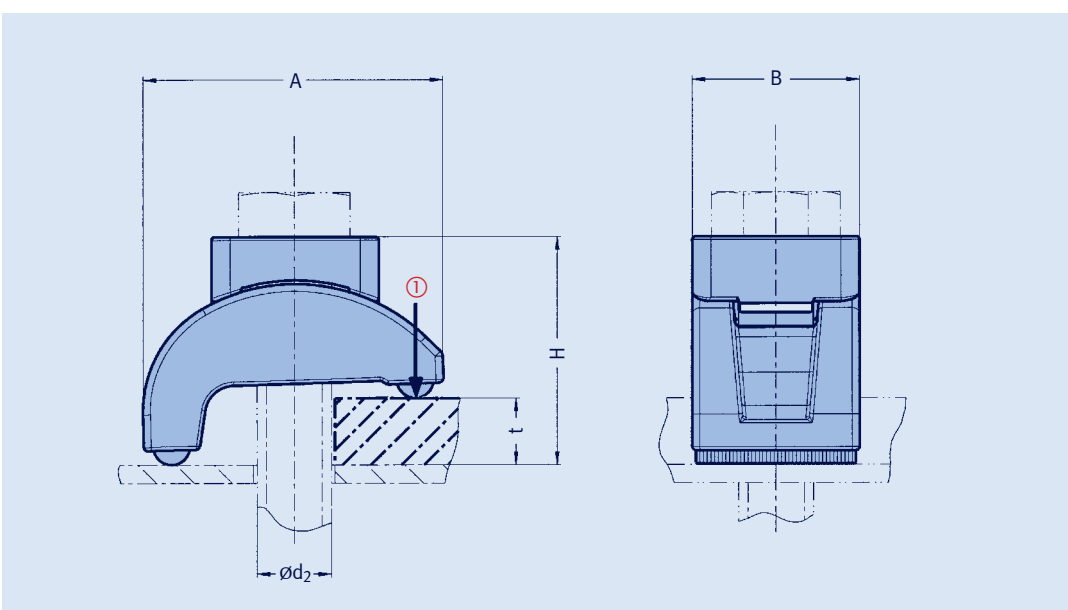

Beam adapters type 76 D2 11 to 76 42 11

Material:
cast iron hot dip galvanized

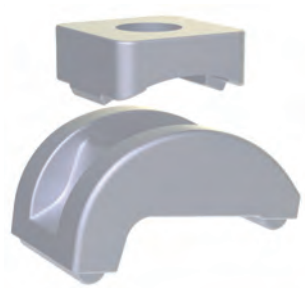

① The loads specified correspond to this in load case H (level A/B) 'Max. permissible loads' page 0.6. For further load cases see table.

② Friction value μ = 0.14.

type	bolts A193B7 / 8.8 support load [lbs] ①	torque value ② [lbs ft] max	A	B	ød$_2$	H$_{min}$	H$_{max}$	t (clamp thickness) min	max	weight [lbs]
76 D2 11	560	25	1.89	0.94	3/8 UNC / M10	1.22	1.46	0.12	0.59	0.25
76 22 11	1350	50	2.24	1.18	1/2 UNC / M12	1.46	1.77	0.16	0.67	0.40
76 32 11	1900	110	2.76	1.46	5/8 UNC / M16	1.73	2.13	0.24	0.79	0.70
76 42 11	3370	220	3.27	1.81	3/4 UNC / M20	2.17	2.56	0.24	0.98	1.30

Order details:
beam adapter (without bolt)
type 76 .. 11
bolts for beam adapters,
see page 7.7.

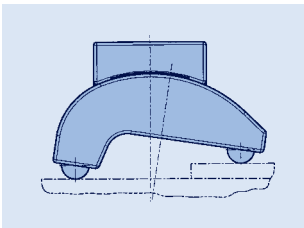

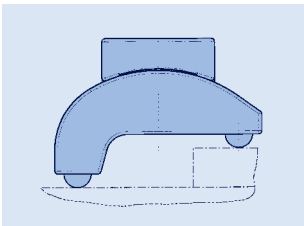

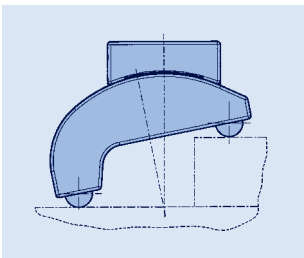

Typical utilization of beam clamps at different material thicknesses

The hardened support segments have a circular groove profile that is pressed into the contact surface on tightening. This way, **a form-fit contact is produced which ensures that no shifting in any direction takes place.**

Example of use:
Attachment of clamp base to steel beam

Order details:
bolt for beam adapter
type 76 .2 11- ...

Bolts for beam adapters

bolt type	dimensions (size x [mm])	weight [lbs]
76 D2 11 – 065	M10 x 65	0.13
76 D2 11 – 080	M10 x 80	0.15
76 D2 11 – 100	M10 x 100	0.17
76 22 11 – 070	M12 x 70	0.19
76 22 11 – 090	M12 x 90	0.22
76 22 11 – 120	M12 x 120	0.27
76 32 11 – 090	M16 x 90	0.42
76 32 11 – 120	M16 x 120	0.51
76 32 11 – 150	M16 x 150	0.60
76 42 11 – 120	M20 x 120	0.85
76 42 11 – 150	M20 x 150	1.00
76 42 11 – 180	M20 x 180	1.12

Hexagon bolts DIN EN ISO 4017,
thread to head, grade 8.8, hot dip galvanized,
including a hexagon nut
DIN EN ISO 4032, grade 8, hot dip galvanized.

Example of connections with beam adapters

Cross-connection

The safe connection of beam profiles to each other is produced very easily with an inlay plate and 8 LISEGA beam adapters. The load-bearing capacity of a cross-connection can be found in the table below.

Load-bearing capacity of cross-connections with LISEGA beam adapters

type	load capacity [lbs] with 4 bolts bolts A193B7/8.8	thickness of intermed. plate
76 D2 11	2240	0.37
76 22 11	5400	0.50
76 32 11	7600	0.62
76 42 11	13480	0.75

Profile connection

The connection of profiles to each other can be made either directly or by using an inlay plate.

Guides with beam adapters Type 76 for clamp bases Type 49 Cantilevers with beam adapters Type 76 .. 16

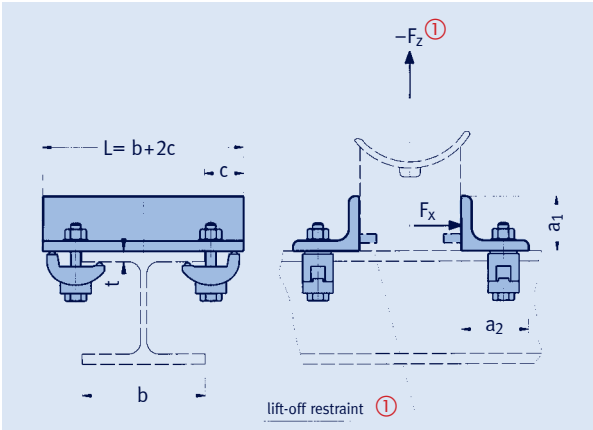

Guide with beam adapters for clamp bases type 76 00 11 to 76 00 14

Material: guide carbon steel

type	type ① with lift-off restraint	torque value [lbs ft] ②	F_x [lbs]	$-F_z$ ① [lbs]	a_1	a_2	b_{min}	c	t_{max}	total weight [lbs] for b=4 inch	+per inch
76 00 11	76 00 21	25	225	790	1.18	1.97	1.65	1.57	0.59	3.7	0.34
76 00 12	76 00 22	50	380	1010	1.18	2.36	1.97	1.77	0.67	6.2	0.53
76 00 13	76 00 23	110	630	1460	1.57	3.15	2.52	2.17	0.79	10.8	0.78
76 00 14	76 00 24	220	1060	1460	1.57	3.15	2.87	2.56	0.98	15.9	0.78

① If required, the guides can be supplied with an additional lift-off restraint (width 3.15 inch [80mm]). (When ordering also specify clamp base type.)
Fz: the permissible short duration lift-off load is limited in every case by the permissible lift-off load of the clamp base. See page 4.68 for this.

② Friction value μ = 0.14

Order details:
lateral guide
type 76 00 1., b = ...inch

Order details:
lateral guide with lift-off restraint
type 76 00 2. – 49 .. ..
(clamp base type), b = ...inch

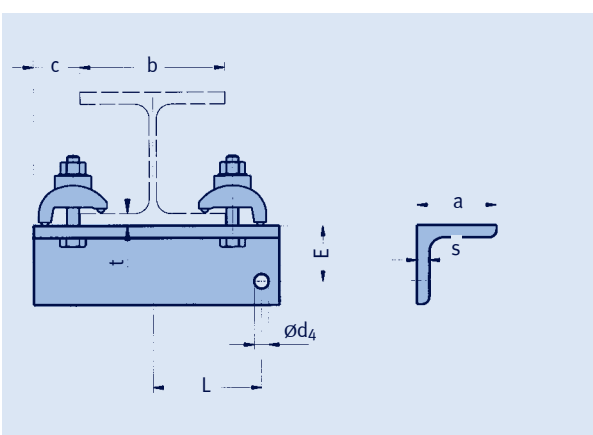

Cantilever with beam adapters type 76 C1 16 to 76 21 16

Material: carbon steel

L_{min} = 0 inch $L_{max} = \frac{b}{2} + c$

type	torque value [lbs ft] ①	a x s	b_{min}	b_{max}	c	ø d_4	E	t_{max}	weight [lbs] for b=4 inch L=2inch	+per inch
76 C1 16	25	1.57x0.24	1.65	11.81	1.57	0.43	0.98	0.59	2.0	0.20
76 D1 16	50	1.36x0.24	1.97	11.81	1.77	0.43	1.77	0.67	3.8	0.34
76 11 16	110	2.76x0.28	2.17	11.81	2.17	0.55	1.89	0.79	6.4	0.51
76 21 16	220	3.15x0.31	2.52	11.81	2.56	0.67	2.17	0.98	9.8	0.60

① Friction value μ = 0.14

Order details:
cantilever with beam adapters
type 76 .1 16
b = ...inch, L = ...inch

Cantilevers with beam adapters Type 76 .. 17

Cantilevers with beam adapters types 76 C1 17 to 76 21 17

Material: carbon steel

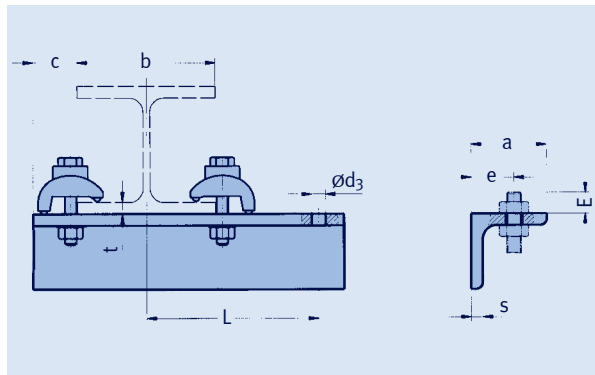

$$L >= \frac{b}{2} + c$$

① Friction value μ = 0.14

type	① torque value [lbs ft]	a x s	b_{min}	c	ød3	e	E	t_{max}	L_{max} up to beam width b= 3.23	3.94	4.92	5.51	7.09	8.66	10.24	11.81	weight [lbs] for b=4inch L = 4inch	+per inch
76 C1 17	25	1.57x0.24	1.81	1.57	0.43	0.87	0.79	0.59	4.72	9.06	10.63	12.20	12.60	13.39	14.17	14.96	2.3	0.20
76 D1 17	50	2.36x0.24	2.17	1.77	0.43	0.98	0.79	0.67	4.13	6.69	7.87	9.84	11.02	13.39	14.17	14.96	4.2	0.51
76 11 17	110	2.76x0.28	2.52	2.17	0.55	1.10	0.98	0.79	4.33	5.51	6.69	7.87	9.06	11.42	13.78	14.96	6.8	0.51
76 21 17	220	3.15x0.31	2.87	2.56	0.55	1.18	0.98	0.98	5.71	6.30	7.48	9.25	10.43	11.42	12.20	12.99	10.1	0.60

Order details:
cantilever with beam adapters
type 76 .1 17
b = ...inch, L = ...inch

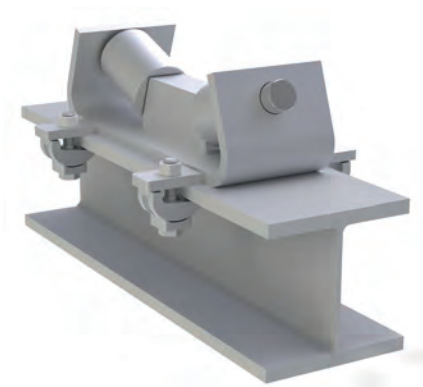

Example of use:
roller bearing fitted at works with lateral support plates

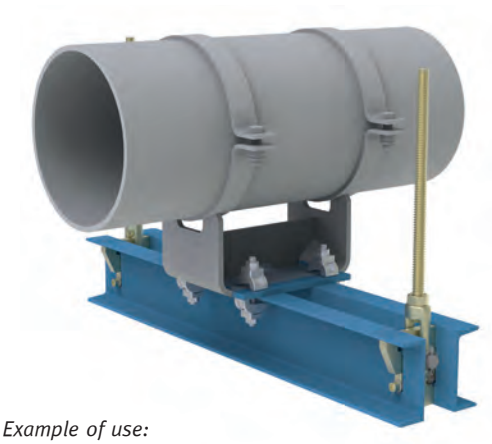

Example of use:
clamp base on trapeze

Slide plates Type 70

Application and field of use

The pipe systems resting on pipe bearings are subject to displacement as a result of thermal expansion. This displacement must be permitted to prevent unacceptable stresses that could damage the piping system. Furthermore, the slight friction caused by these movements is reduced by inserting slide plates between the clamp base and supporting framework.

During the planning phase the reduction of friction forces is extremely important. Since friction forces can represent considerable additional forces to the operational loads, they are usually distributed into the supporting framework (building structure or secondary steelwork) by the use of low friction materials/surfaces.

By lowering friction forces the dimensioning of building structures and secondary steelwork can be, under the aspect of cost saving, reduced. Also the reaction forces in the pipe statics.

Slide plates are commonly used in all pipe systems in industrial processes / chemical plants, in the power station field, in liquefied gas transport or in district heating pipe systems.

Through the use of slide plates friction forces can be reduced about 60%. Instead of steel / steel sliding contact with a friction coefficient of $\mu \approx 0.3$, through the use of slide plates and a stainless steel plate as a counterface on the clamp base side the friction coefficient can be reduced to as little as $\mu \approx 0.1$ (dry).

LISEGA slide plates consist of different low-friction materials for different temperature ranges. For use at a constant temperature up to 356°F [180°C] (at the bottom of the clamp base) the standard PTFE slide plate is recommended. For temperatures above 356°F [180°C] to a maximum of 660°F [350°C] a special high-temperature material is used.

Advantages of the low-friction materials

- **high mechanical wear resistance**
- **temperature resistance up to 660°F [350°C]**
- **suitable for use in aggressive environmental conditions due to their high chemical resistance**
- **self-lubricating**
- **permanent freedom from maintenance**
- **long lifespan**
- **excellent load-bearing capacity**

Clamp bases are seated on slide plates allowing movement with reduced friction – this means the pipe systems can move without constraint during thermal expansion.

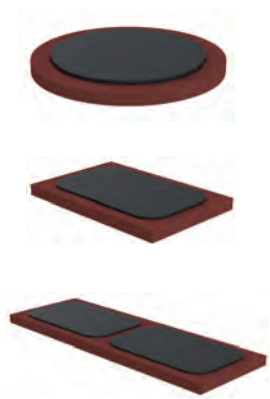

Weld-on slide plates

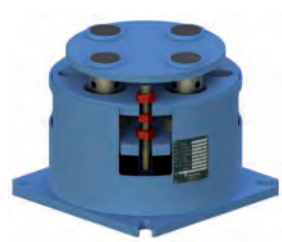

Type 28 with embedded slide plates

Type 29 with load plate and PTFE slide plates

Typical use of slide plates under clamp bases

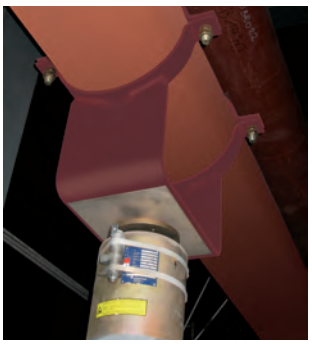

Other fields of application for LISEGA slide plates are uses where heavy loads must be moved horizontally. By using slide plates the force required for movement can be reduced by as much as 60%. The use of slide plates has a favorable effect on the whole pipe system layout.

Build of the slide plates

LISEGA slide plates for the temperature range up to 356°F [180°C] are made of the low-friction material PTFE. For temperatures from 356°F [180°C] up to 660°F [350°C] a special high-temperature material is used that not only increases heat resistance but also optimizes the mechanical properties.

The LISEGA slide plate to weld on consists basically of a supporting plate of carbon steel with a weldable primer coating in which the low-friction material is embedded.

Optionally these supporting plates can be supplied hot dip galvanized.

The LISEGA slide plates for bolting are hot dip galvanized aas standard.

The counterface is a stainless steel plate. Optionally **the stainless steel plate, that must be ordered separately,** can be welded to carbon steel support plate or it is attached to the bottom of the clamp base in the factory and can be used immediately.

Use of slide plates for pipe guides type 49 .. .. G..

Specially developed for vertical installation, such as for example for type 49 .. .. G.. pipe guides, the slide plate is bolted to the support plate.

① *stainless steel plate*
② *type 70 .. ..-MB*

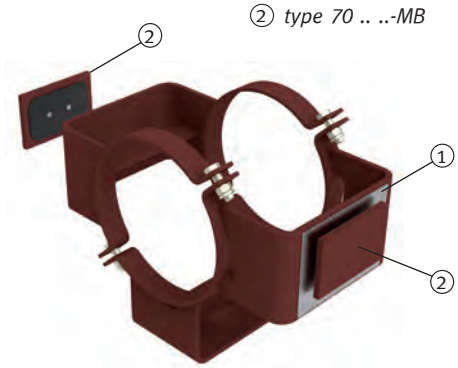

slide bearing / guide through clamp base type 49 .. .. G3-SP with slide plates

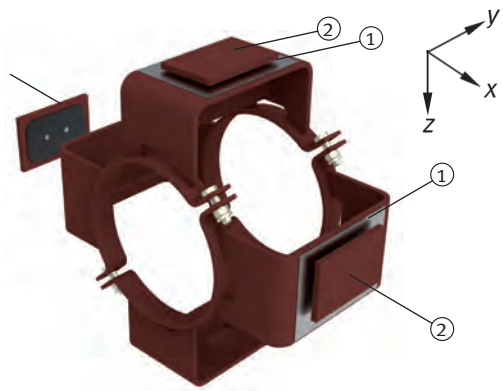

X-Z-stop with guide in Y direction through clamp base Type 49 .. .. G4-SP with slide plates

Friction values μ in dependence on operating temperature

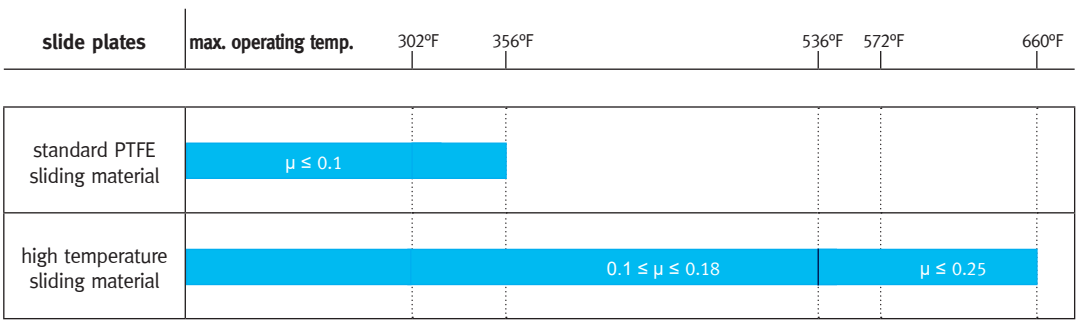

Information on construction and assembly of slide plates

- **Parallel installation of the slide plates and counterfaces is required.**
- **In every possible bearing position the slide plates must be fully covered by the counterfaces.**
- **The components are to be fitted so that any bending of the slide plates or counterfaces is prevented.**

Clamp base type 49 on slide plate with clamp connection to steelwork

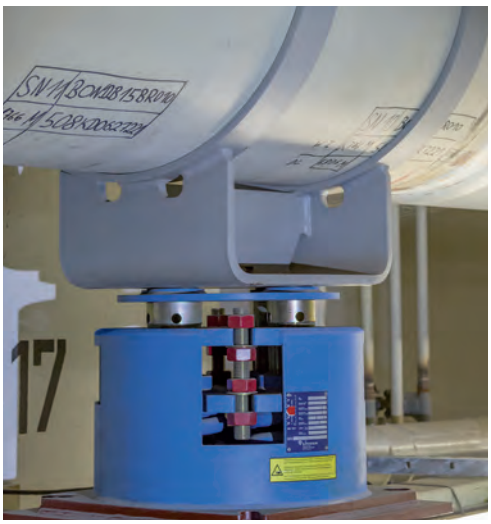

Clamp base type 49 and spring support type 28 with slide plates

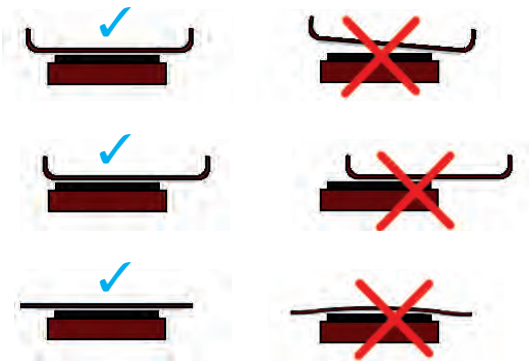

Installation of slide plates

- **Type 70 .. 1. Is tack-welded with single datum points. If all-round welding is required, the temperature of the PTFE material must not hereby exceed 500°F [260°C]. When welding, the PTFE material or the restraining surfaces of the support plate must be protected from dirt.**
- **It is recommended to install the slide plates only horizontally. For vertical installation type 70 .. ..-MB is to be used. When it has been ensured that the counterface is always in contact with the PTFE, the standard component shape 70 .. .. can also be used.**
- **Type 70 .. 2. and type 70 .. 3. are bolted to the steelwork with 1/8" or 1/2" bolts. These bolts do not form part of the scope of supply.**

Special sizes can be supplied on request.

load% nom. load / type	travel range 1				travel range 2				travel range 3			
	40%	60%	80%	100%	40%	60%	80%	100%	40%	60%	80%	100%
29 C. 1.												
29 D. 1.												
29 1. 1.								■		■	■	■
29 2. 1.								■		■	■	■
29 3. 1.				■			■	■	■	■	■	■
29 4. 1.				■		■	■	■	■	■	■	■
29 5. 1.				■		■	■	■	■	■	■	■
29 6. 1.			■	■		■	■	■	■	■	■	■
29 7. 1.		■	■	■	■	■	■	■	■	■	■	■
29 8. 1.		■	■	■	■	■	■	■	■	■	■	■
29 9. 1.	■	■	■	■	■	■	■	■	■	■	■	■

■ *Recommended use of slide plates for spring supports type 29 .. 1.*

Slide plates to weld-on Type 70

Slide plates to weld-on (rectangular shape) type 70 11 1. to 70 48 1.

Material: carbon steel

Surface: weldable primer

① The 6th digit is to be filled out in dependence of the operating temperature.

② For friction values of slide plates: see table on page 7.11.

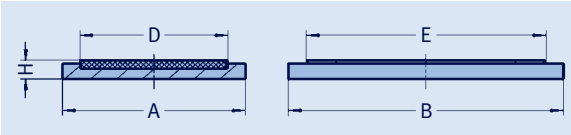

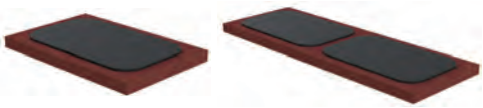

type ①	max. load [lbs x 1000] .. .. .1 302°F	356°F	.. .. .4 660°F ②	A	B	H	sliding surface D x E	weight [lbs]
70 11 1.	2.9	1.5	5.6	1.97	1.97	0.39	ø 1.57	0.4
70 12 1.	4.9	2.9	8.9	1.97	3.94	0.39	1.18 x 3.15	0.7
70 13 1.	8.3	4.9	15	1.97	5.91	0.39	1.18 x 5.12	0.9
70 14 1.	11	6.9	22	1.97	7.87	0.39	1.18 x 7.09	1.3
70 16 1.	18	11	35	1.97	11.81	0.39	1.18 x 11.02	1.8
70 17 1.	23	13	46	1.97	15.35	0.39	2 x 1.18 x 7.09	2.2
70 18 1.	30	17	59	1.97	19.29	0.39	2 x 1.18 x 9.06	2.9
70 22 1.	13	8	26	3.94	3.94	0.47	3.15 x 3.15	1.5
70 23 1.	22	13	44	3.94	5.91	0.47	3.15 x 5.12	2.2
70 24 1.	31	18	62	3.94	7.87	0.47	3.15 x 7.09	2.9
70 26 1.	49	29	98	3.94	11.81	0.47	3.15 x 9.06	4.2
70 27 1.	62	37	125	3.94	15.35	0.47	2 x 3.15 x 7.09	5.5
70 28 1.	80	48	161	3.94	19.29	0.47	2 x 3.15 x 9.06	6.8
70 33 1.	36	22	74	5.91	5.91	0.47	5.12 x 5.12	3.1
70 34 1.	51	31	103	5.91	7.87	0.47	5.12 x 7.09	4.2
70 36 1.	80	48	161	5.91	11.81	0.47	5.12 x 11.02	6.0
70 37 1.	104	62	206	5.91	15.35	0.47	2 x 5.12 x 7.09	7.9
70 38 1.	133	79	265	5.91	19.29	0.47	2 x 5.12 x 9.06	9.7
70 44 1.	71	43	143	7.87	7.87	0.47	7.09 x 7.09	5.3
70 46 1.	111	67	224	7.87	11.81	0.47	7.09 x 11.02	7.9
70 47 1.	145	86	287	7.87	15.35	0.47	2 x 7.09 x 7.09	11.9
70 48 1.	185	110	368	7.87	19.29	0.47	2 x 7.09 x 9.06	15.0

Order details:
slide plate to weld-on
type 70 .. 1.

Slide plates to weld-on (round shape) type 70 05 1. to 70 20 1.

Material: carbon steel

Surface: weldable primer

① The 6th digit is to be filled out in dependence of the operating temperature.

② For friction values of slide plates: see table on page 7.11.

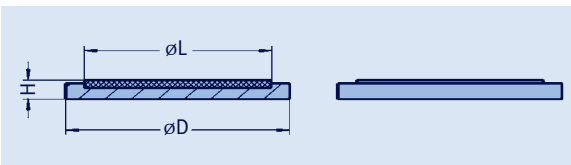

type ①	max. load [lbs x 1000] .. .. .2 302°F	356°F	.. .. .5 660°F ②	øD	H	sliding surface øL	weight [lbs]
70 05 1.	2.9	1.5	5.6	1.97	0.39	1.57	0.2
70 08 1.	7.4	4.2	14	3.35	0.47	2.56	0.9
70 10 1.	11	6.7	22	3.94	0.47	3.15	1.1
70 13 1.	20	12	42	5.12	0.47	4.33	2.0
70 17 1.	39	23	78	6.69	0.47	5.91	3.1
70 20 1.	57	34	113	7.87	0.47	7.09	4.2

Order details:
slide plate to weld-on
type 70 .. 1.

Slide plates for bolting
Type 70

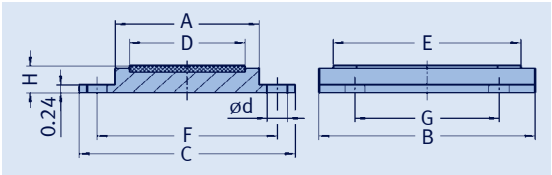

Slide plates for bolting (rectangular shape lengthwise) type 70 11 2. to 70 48 2.

Surface: hot dip galvanized

type ①	max. load [lbs x 1000] .. .. .1 302°F	356°F	.. .. .4 660°F ②	A	B	H	sliding surface D x E	C	F	G	qty holes	ød	weight [lbs]
70 11 2.	2.9	1.5	5.6	1.97	1.97	0.87	ø 1.57	3.94	2.95	0.00	2	0.47	1.1
70 12 2.	4.9	2.9	8.9	1.97	3.94	0.87	1.18x3.15	3.94	2.95	2.36	4	0.47	2.2
70 13 2.	8.3	4.9	15	1.97	5.91	0.87	1.18x5.12	3.94	2.95	3.94	4	0.47	3.3
70 14 2.	11	6.9	22	1.97	7.87	0.87	1.18x7.09	3.94	2.95	5.91	4	0.47	4.4
70 16 2.	18	11	35	1.97	11.81	0.87	1.18x11.02	3.94	2.95	9.84	4	0.47	6.4
70 17 2.	23	13	46	1.97	15.35	0.87	2x1.18x7.09	3.94	2.95	11.81	4	0.47	8.4
70 18 2.	30	17	59	1.97	19.29	0.87	2x1.18x9.06	3.94	2.95	13.78	4	0.47	10.4
70 22 2.	13	8	26	3.94	3.94	0.87	3.15x3.15	5.91	4.92	2.36	4	0.55	3.7
70 23 2.	22	13	44	3.94	5.91	0.87	3.15x5.12	5.91	4.92	3.94	4	0.55	5.5
70 24 2.	31	18	62	3.94	7.87	0.87	3.15x7.09	5.91	4.92	5.91	4	0.55	7.3
70 26 2.	49	29	98	3.94	11.81	0.87	3.15x11.02	5.91	4.92	9.84	4	0.55	11.0
70 27 2.	62	37	125	3.94	15.35	0.87	2x3.15x7.09	5.91	4.92	11.81	4	0.55	14.1
70 28 2.	80	48	161	3.94	19.29	0.87	2x3.15x11.02	5.91	4.92	13.78	4	0.55	17.9
70 33 2.	36	22	74	5.91	5.91	0.87	5.12x5.12	7.87	6.89	3.94	4	0.55	7.9
70 34 2.	51	31	103	5.91	7.87	0.87	5.12x7.09	7.87	6.89	5.91	4	0.55	10.4
70 36 2.	80	48	161	5.91	11.81	0.87	5.12x11.02	7.87	6.89	9.84	4	0.55	15.4
70 37 2.	104	62	206	5.91	15.35	0.87	2x5.12x7.09	7.87	6.89	11.81	4	0.55	20.1
70 38 2.	133	79	265	5.91	19.29	0.87	2x5.12x9.06	7.87	6.89	13.78	4	0.55	25.1
70 44 2.	71	43	143	7.87	7.87	0.87	7.09x7.09	9.84	8.86	5.91	4	0.55	13.5
70 46 2.	111	67	224	7.87	11.81	0.87	7.09x11.02	9.84	8.86	9.84	4	0.55	19.8
70 47 2.	145	86	287	7.87	15.35	0.87	2x7.09x7.09	9.84	8.86	11.81	4	0.55	25.8
70 48 2.	185	110	368	7.87	19.29	0.87	2x7.09x9.06	9.84	8.86	13.78	4	0.55	32.4

① The 6th digit is to be filled out in dependence of the operating temperature.

② For friction values of slide plates: see table on page 7.11.

Order details:
slide plate for bolting
type 70 .. 2.

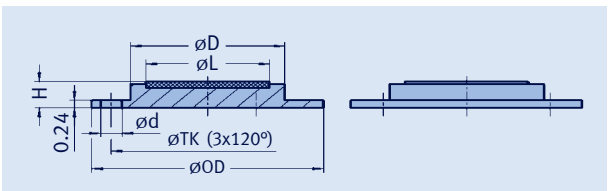

Slide plates for bolting (round shape) type 70 05 2. to 70 20 2.

Surface: hot dip galvanized

type ①	max. load [lbs x 1000] .. .. .2 302°F	356°F	.. .. .5 660°F ②	øD	øOD	H	sliding surface øL	øTK	ød	weight [lbs]
70 05 2.	2.9	1.5	5.6	1.97	3.54	0.87	1.57	2.76	0.47	1.1
70 08 2.	7.4	4.2	14	3.35	4.92	0.87	2.56	4.13	0.47	2.6
70 10 2.	11	6.7	22	3.94	5.91	0.87	3.15	4.92	0.55	3.5
70 13 2.	20	12	42	5.12	7.09	0.87	4.33	6.10	0.55	5.5
70 17 2.	39	23	78	6.69	8.66	0.87	5.91	7.68	0.55	8.6
70 20 2.	57	34	113	7.87	10.24	0.87	7.09	9.06	0.71	11.9

① The 6th digit is to be filled out in dependence of the operating temperature.

② For friction values of slide plates: see table on page 7.11.

Order details:
slide plate for bolting
type 70 .. 2.

Slide plates for bolting Type 70

Slide plates for bolting (transverse rectangular shape) type 70 12 3. to 70 48 3.

Surface: hot dip galvanized

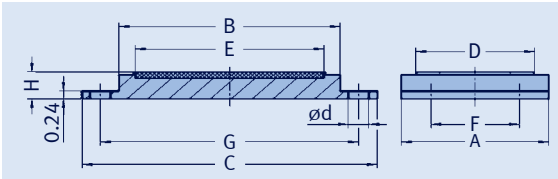

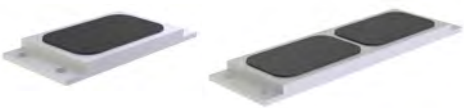

① The 6th digit is to be filled out in dependence of the operating temperature.

② For friction values of slide plates: see table on page 7.11.

type ①	max. load [lbs x 1000] .. .. .1 302°F	356°F	.. .. .4 660°F ②	A	B	H	sliding surface D x E	C	F	G	qty holes	ød	weight [lbs]
70 12 3.	4.9	2.9	8.9	1.97	3.94	0.87	1.18x3.15	5.91	0	4.92	2	0.47	2.0
70 13 3.	8.3	4.9	15	1.97	5.91	0.87	1.18x5.12	7.87	0	6.89	2	0.47	2.9
70 14 3.	11	6.9	22	1.97	7.87	0.87	1.18x7.09	9.84	0	8.86	2	0.47	3.5
70 16 3.	18	11	35	1.97	11.81	0.87	1.18x11.02	13.78	0	12.80	2	0.47	5.1
70 17 3.	23	13	46	1.97	15.35	0.87	2x1.18x7.09	17.32	0	16.34	2	0.47	6.6
70 18 3.	30	17	59	1.97	19.29	0.87	2x1.18x9.06	21.26	0	20.28	2	0.47	8.2
70 23 3.	22	13	44	3.94	5.91	0.87	3.15x5.12	7.87	2.36	6.89	4	0.55	5.3
70 24 3.	31	18	62	3.94	7.87	0.87	3.15x7.09	9.84	2.36	8.86	4	0.55	6.8
70 26 3.	49	29	98	3.94	11.81	0.87	3.15x11.02	13.78	2.36	12.80	4	0.55	9.9
70 27 3.	62	37	125	3.94	15.35	0.87	2x3.15x7.09	17.32	2.36	16.34	4	0.55	12.8
70 28 3.	80	48	161	3.94	19.29	0.87	2x3.15x9.06	21.26	2.36	20.28	4	0.55	15.7
70 34 3.	51	31	103	5.91	7.87	0.87	5.12x7.09	9.84	3.94	8.86	4	0.55	10.1
70 36 3.	80	48	161	5.91	11.81	0.87	5.12x11.02	13.78	3.94	12.80	4	0.55	14.6
70 37 3.	104	62	206	5.91	15.35	0.87	2x5.12x7.09	17.32	3.94	16.34	4	0.55	18.7
70 38 3.	133	79	265	5.91	19.29	0.87	2x5.12x9.06	21.26	3.94	20.28	4	0.55	23.4
70 46 3.	111	67	224	7.87	11.81	0.87	7.09x11.02	13.78	5.91	12.80	4	0.55	19.4
70 47 3.	145	86	287	7.87	15.35	0.87	2x7.09x7.09	17.32	5.91	16.34	4	0.55	24.9
70 48 3.	185	110	368	7.87	19.29	0.87	2x7.09x9.06	21.26	5.91	20.28	4	0.55	30.9

Order details:
slide plate for bolting type 70 .. 3.

Material: carbon steel

Surface: weldable primer

Slide plate type 70 .. ..-MB for vertical or overhead installation

Supplementary order details:
slide plate 70 .. ..-MB

LISEGA software tools for planning and design

8

LISEGA SOFTWARE TOOLS FOR PLANNING AND DESIGN

LICAD®

PIPE SUPPORT DESIGNER

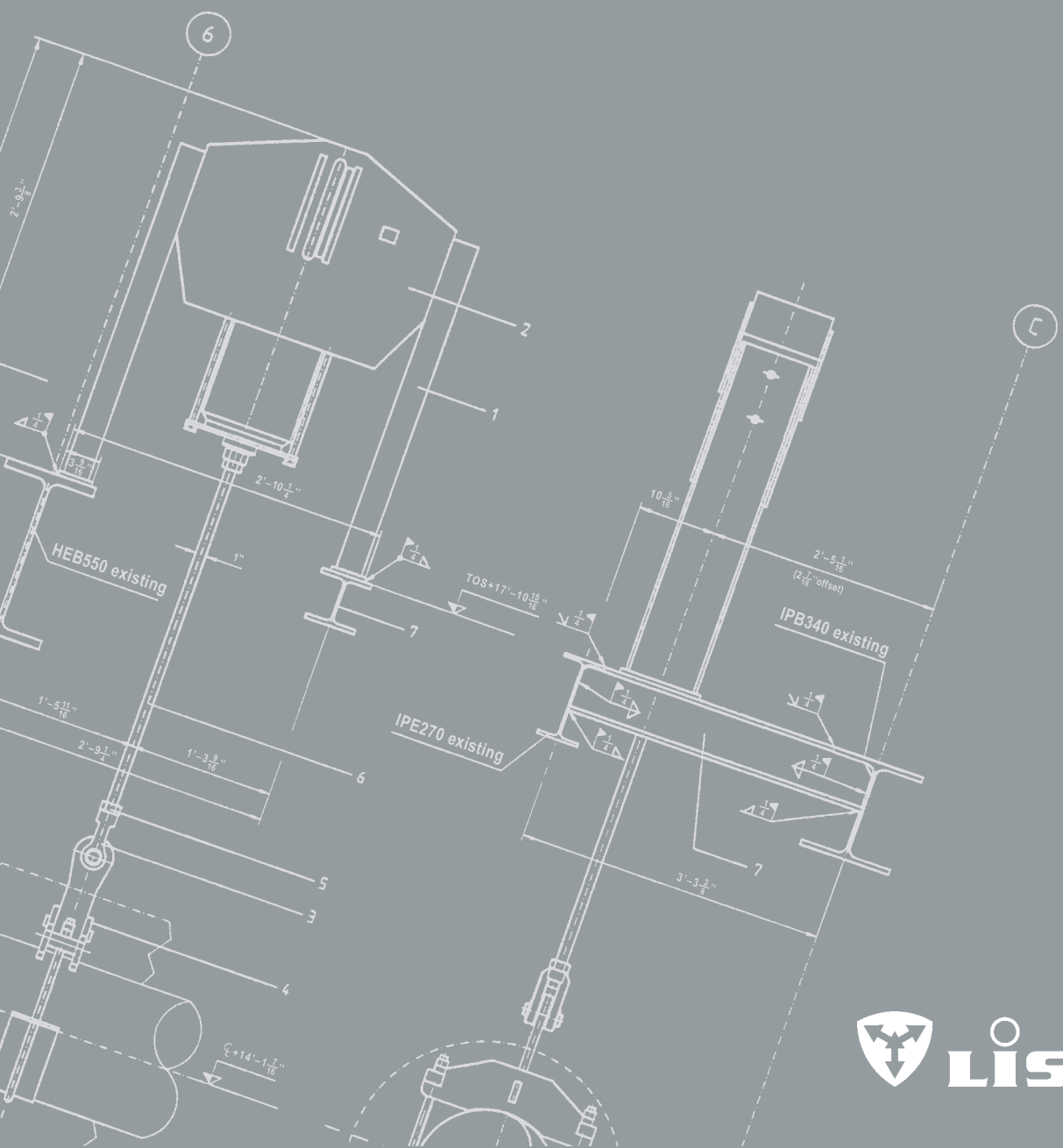

PRODUCT GROUP 8

LISEGA

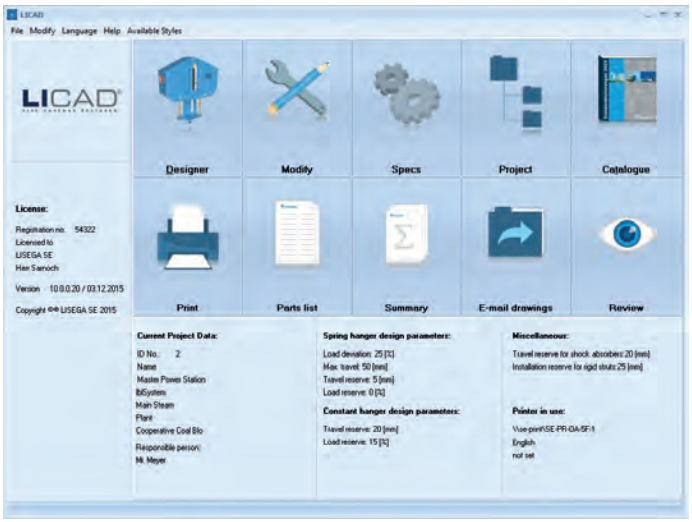

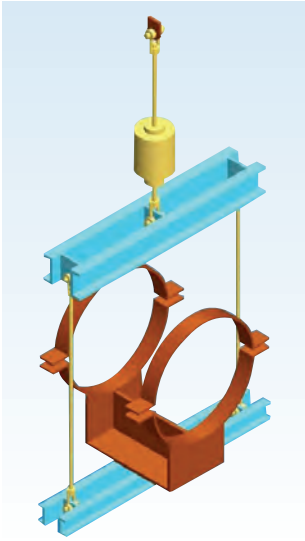

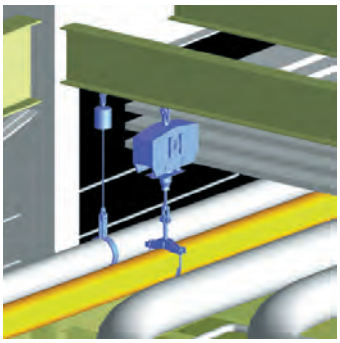

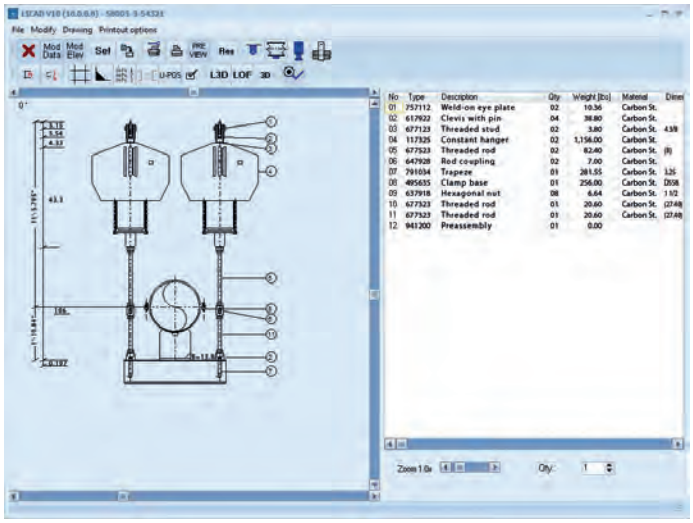

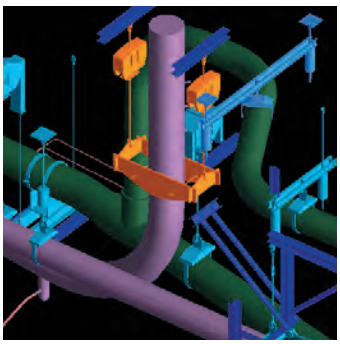

LICAD®
PIPE SUPPORT DESIGNER

LISEGA software tools for planning and design

Contents **Page**

LISEGA software tools for planning and design **8.1**

Planning software LICAD® **8.2**

Interfaces and component libraries **8.5**

LISEGA software tools for planning and design

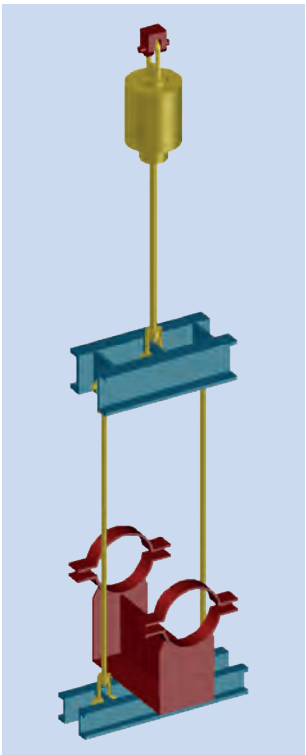

The intelligent solution for support design

LISEGA's unique modular system was the prerequisite for the creation of highly sophisticated user software. The solutions we offer open up new opportunities for increased efficiency in design, optimized quality and significant savings in project man-hours.

In general, the model design of plants is carried out with CAD, including CAE systems. Through the integration of LICAD® into different CAD systems, the benefits for the efficient layout of piping systems have been vastly improved.

The LICAD® program has set new standards in this field. It enables the creation of support drawings and lists of materials in minutes instead of hours. LICAD® is an intelligent front-end program that supplies the necessary interface data from only one source for all CAD programs currently in use.

From the point of view of quality this single-source function is particularly important.

To provide the LICAD® user with the widest possible range of applications, LISEGA has developed supplementary user software. The whole package covers:

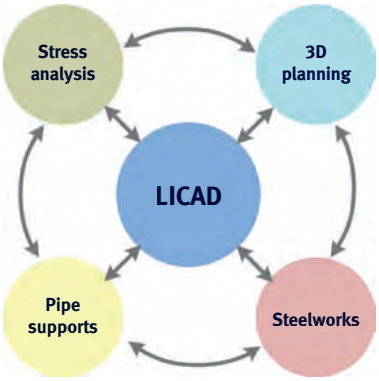

Planning of a plant

- **LICAD® planning and design program for pipe supports**
- **Interfaces for import and export of tables and databases**
- **Interfaces with 3D-CAD component packages**
- **2D / 3D libraries for different CAD programs**
- **Internet communication system for downloading the latest program versions and information on projects, including drawings and orders**
- **Interface to stress analysis and steelwork software**

LICAD® is a registered trademark of LISEGA SE. All other products, fonts and company names are trade names or registered trade names of the respective companies.

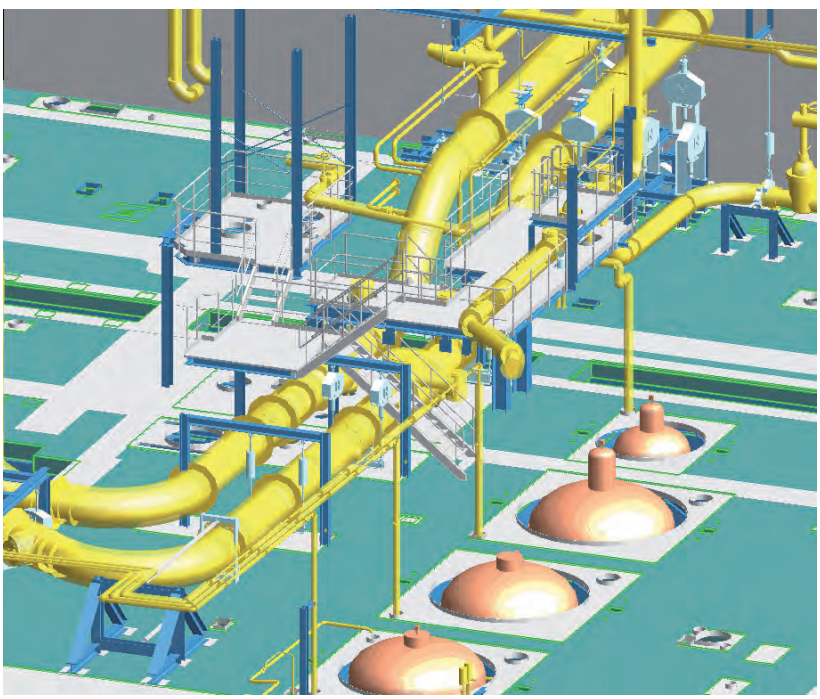

Support configurations can be integrated via the export function into complex 3D views.

Planning software LICAD®

Software with profit effect

Needed first – designed last

As a rule the project planning of complex pipe systems runs through numerous phases of optimization. The design of pipe supports inevitably takes place at the end of the whole process and so their deployment frequently comes far too late. **Although the supports are needed on site beforehand for optimum installation of the pipe systems, they lie right at the end of the planning chain** - all the more important to avoid unnecessary delay. The time factor is now crucial.

LICAD® speeds up the planning process

LICAD®, the LISEGA design program for pipe supports, sets the highest standards in efficiency. With LICAD, the laborious poring over catalogs and the paintaking preparation of lists of material are a things of the past. Support designs and load chains no longer need to be manually configured and then drawn up at great expense and effort. What would otherwise take hours to produce can be done by computer in minutes – at the click of a mouse!

Future-orientated logistics

With LICAD®, great savings in time are possible in the logistics process, from planning right through to delivery. For example, the LICAD® data can, if required, be transmitted directly for processing on the same day by e-mail as a computerized order list. This fits in perfectly with ever-tighter order deadlines.

The downloading and use of LICAD® is free of charge.

In the current version the following languages are available for menu navigation and print editions: Chinese, German, English, French, Italian, Japanese, Polish, Portuguese, Russian, Spanish and Hungarian.

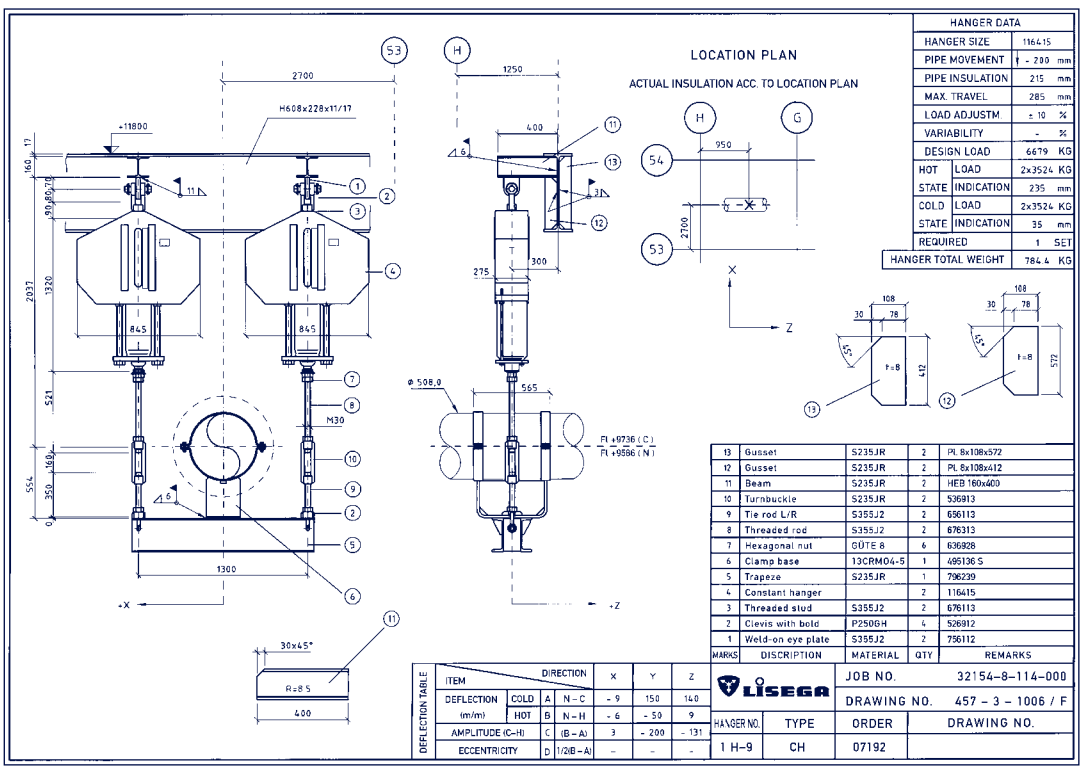

AutoCAD® drawing, generated on the basis of a LICAD® design

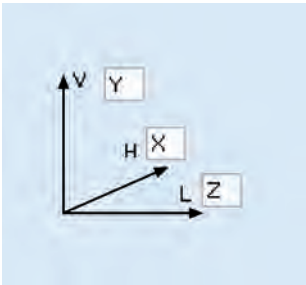

Free determination of axes

LICAD® is simple to use

The relevant data for industrial support points is entered using menu-driven program control. Only 6 parameters are needed to find the optimum solution.

- **pipe diameter**
- **temperature of medium**
- **operating load**
- **displacement**
- **installation height**
- **support configuration**

From this input, the appropriate load chains are automatically generated. The selection of optimum spring and constant hangers thereby follows automatically, whereby the specific customer requirements such as, for example, travel and load reserves according to **ASME B 31.1, VGB-R 510 L, DIN EN 13480** or other optimum parameters are taken into account. This is ensured by the corresponding entries in the options menu.

Taking this information into account, LICAD's programmed algorithm chooses the most economical solution.

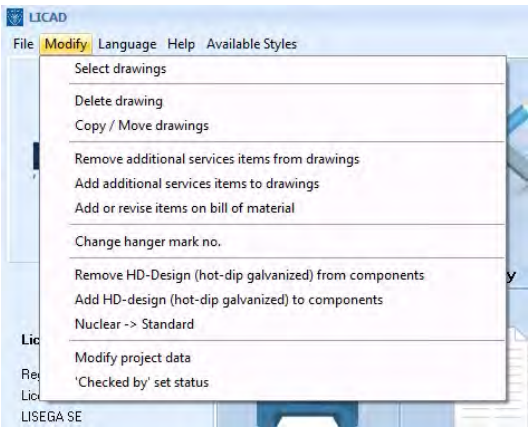

Further options for editing of drawings

True-to-scale drawings

The support chains created are automatically saved as complete assemblies and can be printed out as drawings or modified at any time. They are true to scale and contain all relevant details, including parts lists with weights and materials and optionally with location plan or other freely editable information.

LISEGA modular system forms the basis

The basis of the program is a database system in which the whole LISEGA standard product program is stored as a modular system of absolute functionality. From more than 12,000 standard components, all fully compatible regarding loads and connections, more than 100 standard configurations cover practically all normal installation situations.

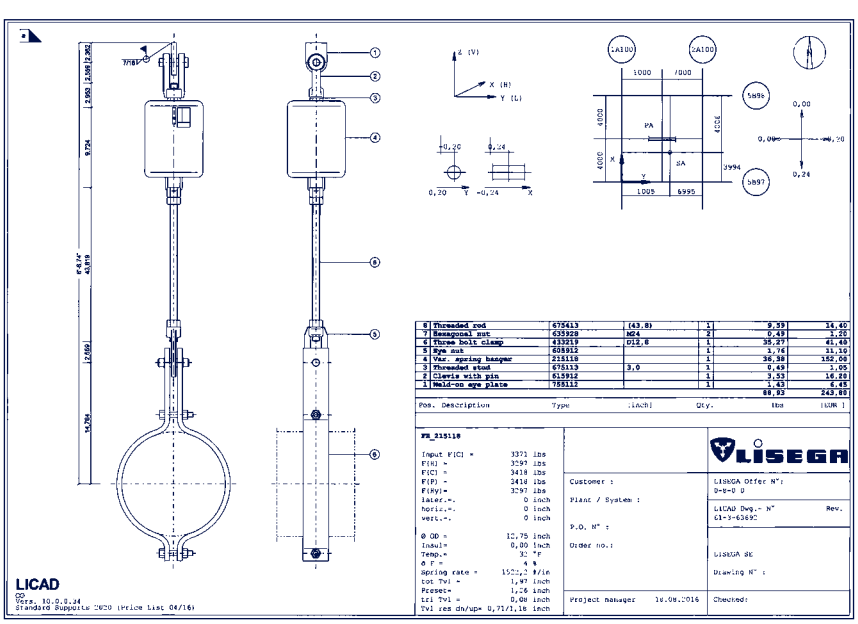

LICAD® drawing generated by a standard printer

All essential functions at a glance

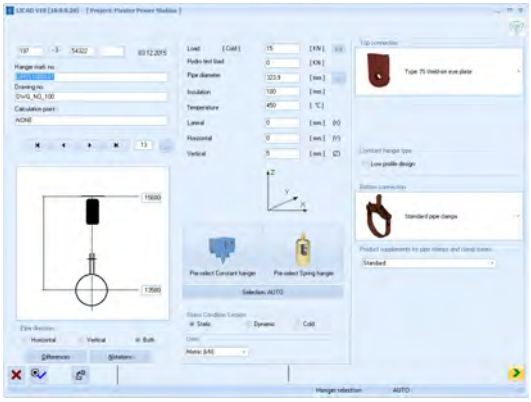

Clearly arranged queries on the essential data for the support in question

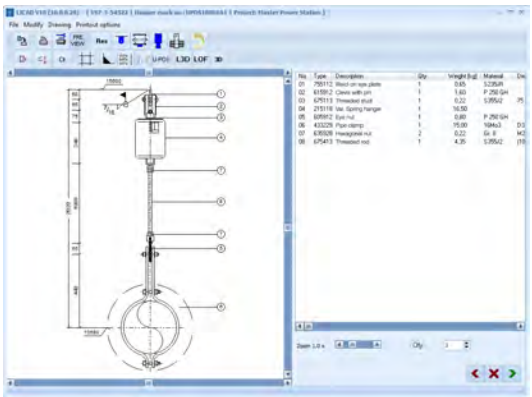

Support design with detailed parts list

Auxiliary designs for steelwork

LICAD® generates ready-to-install load chains from standard supports, from structural attachment to pipe-surrounding component. More or less complex auxiliary designs are necessary for connection to the existing structures (secondary steelwork).

Through its special interface the LICAD® designs can be exported into a separate CAD program (e.g. AutoCAD®, MicroStation®) and supplemented as required.

Interference checks

For larger plant projects the design of the building structure, including steelwork, main components and connecting piping system, is carried out via 3D CAD programs such as **Smart™ 3D (Intergraph), PlantSpace (Bentley Systems), Plant 3D (AutoDESK) or PDMS™ (AVEVA)**. Planning continuity, as well as the need to consider possible interference, make it necessary to fully include the pipe supports.

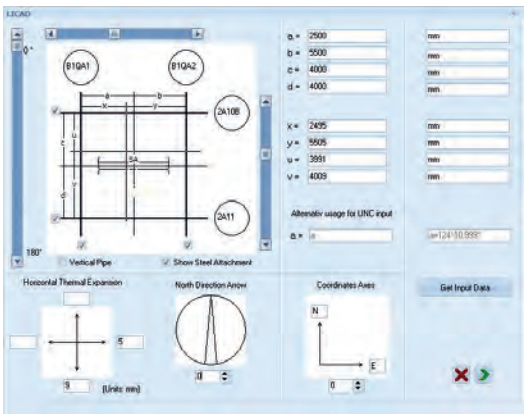

Location plan with axis designations and dimensioning

LICAD® saves up to 50% of planning costs

LICAD® runs smoothly on any modern PC with Windows and is easy to use. Due to its particular effectiveness LICAD® has long been an indispensable tool in support planning for countless engineering offices. Potential savings in costs of **up to 50%** simply cannot be ignored!

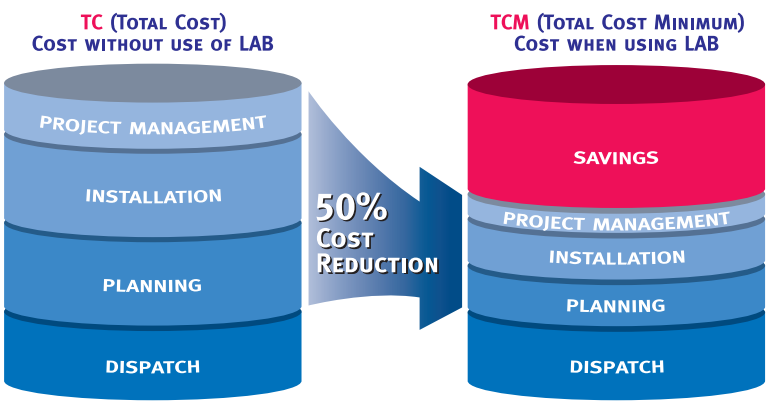

Possible savings in costs through LISEGA Application Benefits (LAB)

Interfaces and component libraries

LICAD® contains a wide range of interfaces and component libraries for well-known CAE, CAD and steelwork programs.

This benefits resources and makes for significant savings in time when designing pipe systems!

Interfaces and CAE systems

A broad spectrum of interfaces enable the import and export of data already entered from, and to, CAD and CAE systems.

This basis of the selection of a support chain is formed by the design data from the pipe calculations of the pipe system. One of the CAE systems is the ROHR2® program system (Sigma Co.), which is used for the static and dynamic analysis of complex piping systems and common skeletal structures.

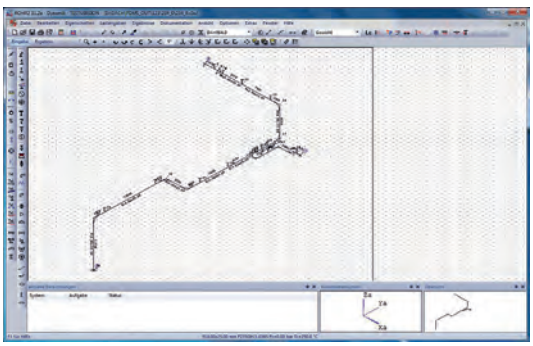

Pipe stress analysis with ROHR2®

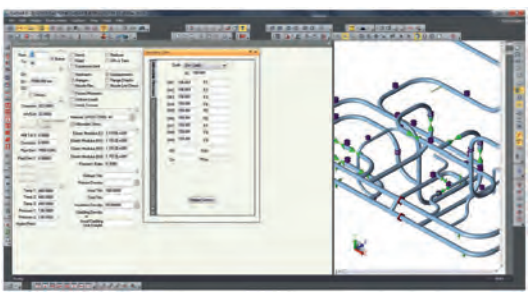

Pipe stress analysis with CAESAR II®

Data from AutoPIPE® (Bentley systems) or CAESAR II® (Intergraph Co.) can continue to be included and used in the selection of the appropriate supports. The data gained from the CAE systems can be sent directly to CAD programs after generation of the supports.

This procedure enables a considerable increase in efficiency and savings in time when designing complex pipe systems.

The interfaces to the CAE systems mentioned above are part of the basic LICAD® package. Optional interfaces for downloading can be found on the LISEGA homepage.

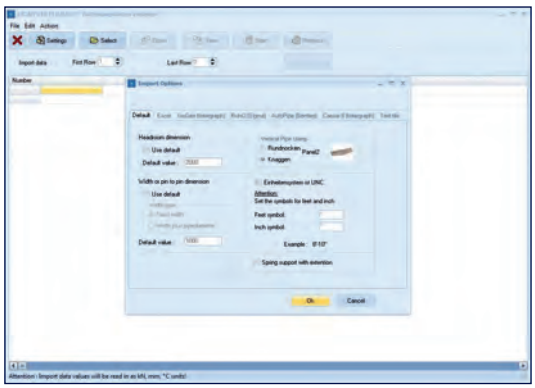

Import of design data

Export of design data from CAESAR II® for LICAD®

Interfaces to CAD programs

Via defined interfaces the LICAD® support designs can be transmitted true to scale and without any further efforts to the known CAD programs. LICAD® supports the export formats DXF, LOF, L3D and ITM. The data are used for the transmission of graphic information and design data. The relevant additional applications are available in the CAD systems for the import of these data.

Pipe systems in AutoPIPE®

AutoPIPE® hanger filter

Export of 2D data

Via a DXF export file the support designs, including dimensioning, can be exported optionally with parts lists, site plans, and title block to CAD programs (e.g. AutoCAD® or MicroStation®). This interface is part of the basic LICAD® package. For export, the material list (STL) and design data (TEC) files are additionally generated; they can be used for further evaluations.

Export to 3D CAD programs

On the basis of component libraries the drawings prepared in LICAD® can be transformed into 3D drawings via add-ons in various CAD programs. This is possible for:

- **AutoCAD®, Autodesk**
- **AutoCAD® Plant 3D, Autodesk**
- **MicroStation®, Bentley Systems**
- **SmartPlant® 3D /Smart™ 3D, Intergraph®**
- **PDS®, Intergraph®**
- **SUPPORT MODELER®, Intergraph®**

For the above mentioned programs the corresponding modules are to be uploaded and installed.

For the **PDMS™** software from **AVEVA** no add-on is registered. A menu extension is available by which data can be conventionally imported and exported.

LICAD® plug-ins

LICAD® plug-ins for different systems are also available. These are used in cases where supports are to be designed interactively in a 3D model. The advantage of a plug-in is that the geometric data of the connection points for the support, as well as pipe diameters, height notations and, if required, the design data are exported directly to the program. There is no longer any need to take measurements in the model. The support chain is automatically displayed in the 3D model.

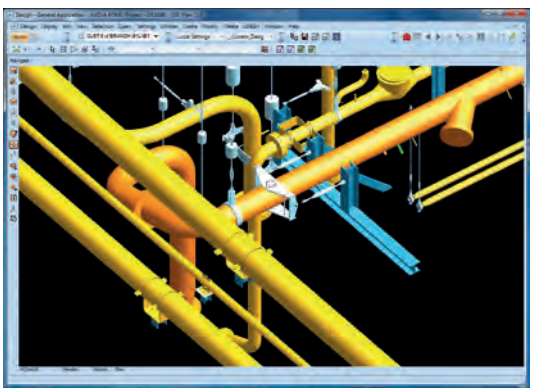

Model in PDMS™ after data import from LICAD®

The attributes of the material lists are also imported, depending on the system.

Important: In order for the plug-ins to function, LICAD® must be installed at the respective work station.

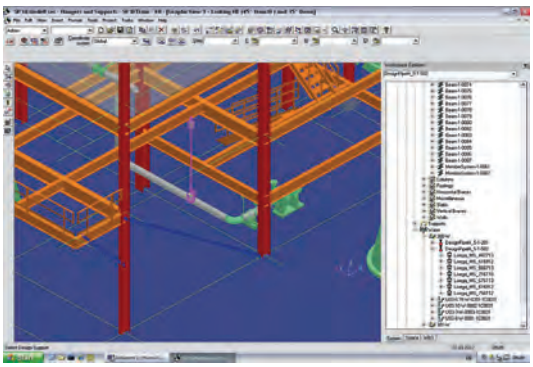

LISEGA standard supports in SmartPlant® 3D

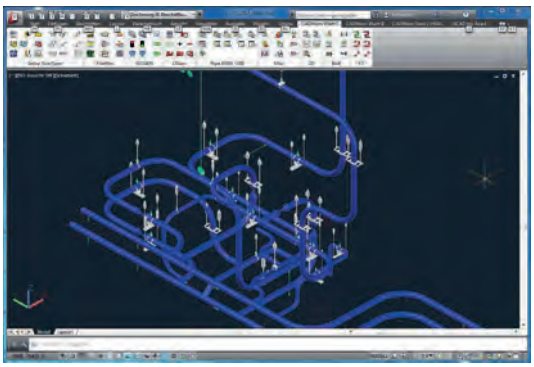

LISEGA supports in CADWorx®

Component Libraries

For further designing in the 2D and 3D modes, comprehensive LISEGA component libraries are available, amongst other things, for the following CAD programs:

- **AutoCAD®, Autodesk**
- **AutoCAD® Plant 3D, Autodesk**
- **MicroStation®, Bentley Systems**
- **SmartPlant® 3D / Smart™ 3D, Intergraph®**
- **PDS®, Intergraph®**
- **PDMS™, AVEVA™**
- **SUPPORT MODELER®, Intergraph®**
- **TEKLA Structures, TEKLA®**

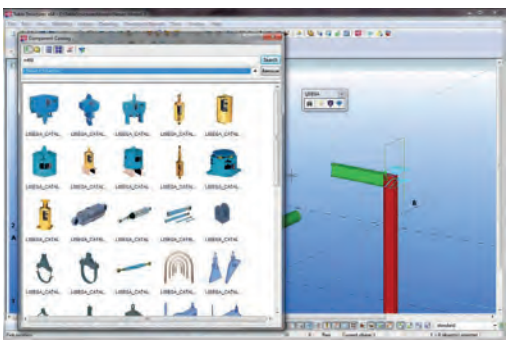

LISEGA component library in TEKLA®

Interface to steelwork programs

Through LICAD®, the most suitable standard support configurations for each case are determined and from this the corresponding load chains, including all individual parts, are specified.

In plant construction, standard supports are the connecting links between pipe systems and steelwork. In ideal cases they can be directly connected to the existing plant structure, but often a further step is necessary, that is, the use of additional steelwork components as connecting elements (secondary steel). It therefore makes sense to be able to display standard supports in steelwork programs. For this, LICAD® provides interfaces to steelwork programs (e.g. TEKLA Structures software). By means of the plug-in function, LICAD® is integrated into the steelwork program and supports can be directly planned in accordance with the requirements of the model.

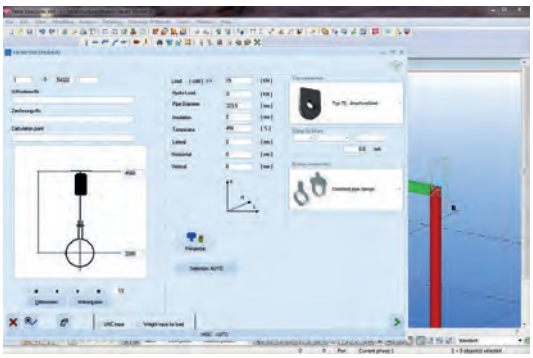

LICAD® plug-in for TEKLA Structures

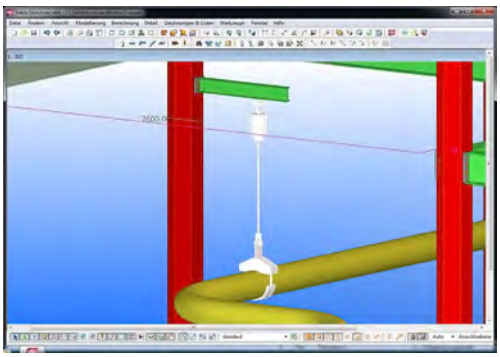

Interactively designed support in TEKLA Structures

Simple modeling and rapid alteration of 3D models

This, together with all other plant components in the model, enables the execution of a clash check, which is necessary when planning complex plants.

With the development of the steelwork interface LISEGA supplies a tool that can reduce the enormous investment in time and so optimize the quality of the planning process.

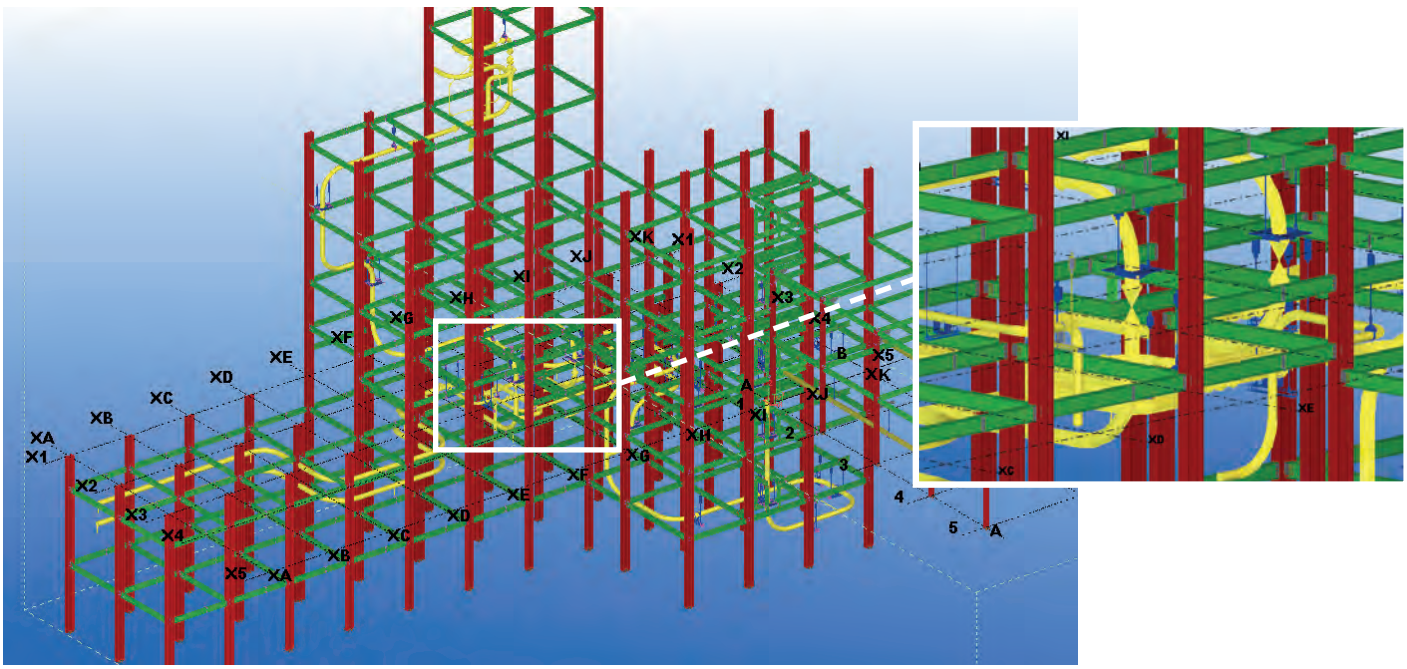

Primary steelwork and pipe systems with supports as reference in TEKLA®

LICAD® updates

LICAD® and other software packages are being constantly updated and expanded. The applicable program version and interfaces in each case can be found on the LISEGA homepage for downloading.

The necessary license numbers are thereby forwarded automatically by e-mail to the recipient. Further license numbers can be obtained by telephone.

The use of LICAD® software is free of charge.

Supplementary services, engineering, field service

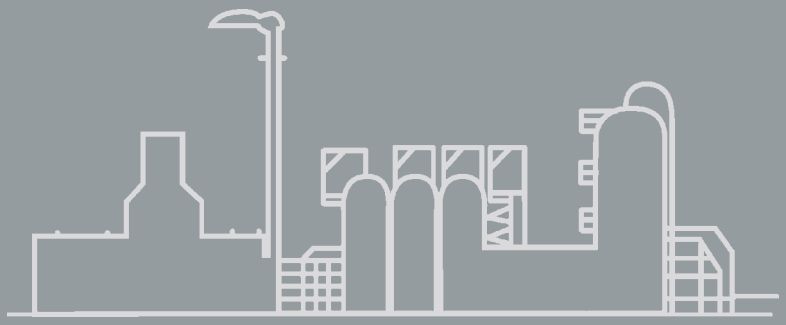

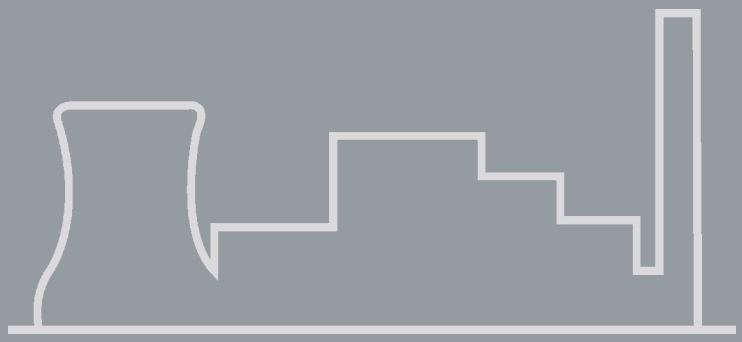

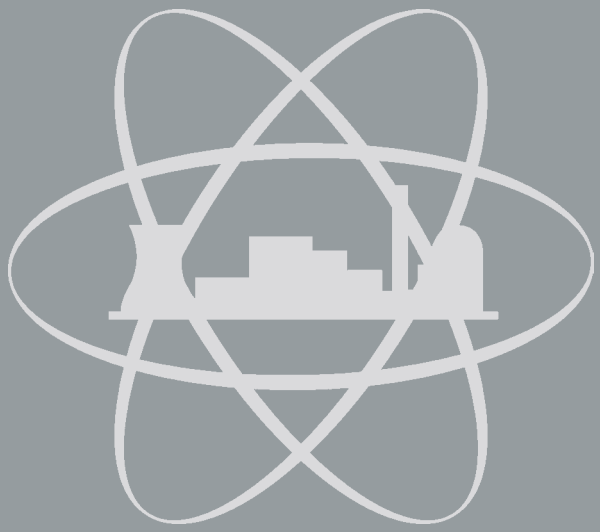

LISEGA

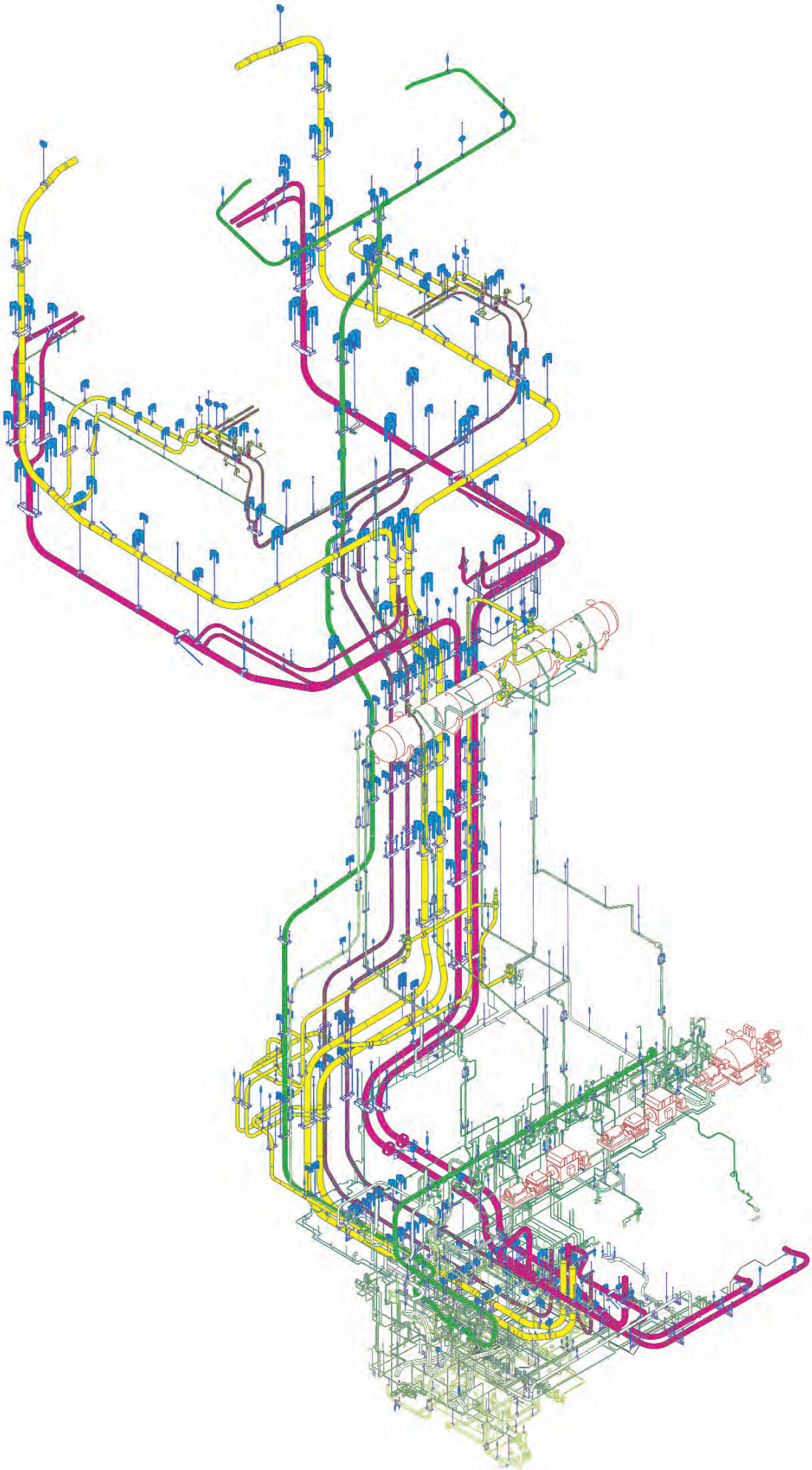

Supplementary services, engineering, field service

Contents | Page

Supplementary services 9.1

Engineering support design 9.5

Field service 9.10

Supplementary services

The LISEGA product program presented in this catalog STANDARD SUPPORTS incorporates the latest technical developments with respect to the proper support of pipe systems in industrial plant construction.

The relevant international stipulations are observed to the fullest extent.

Special fields of application

The standard design described covers the normal field of application. In special sectors, for example, nuclear or offshore installations, supplementary measures with regard to material quality or corrosion protection may be required. The implementation of particular customer specifications is ensured by the integrated quality management system. Certificates of approval are supplied with the order.

Service areas

The LISEGA performance package includes not only the product spectrum but a range of services within the framework of product application. In the field of engineering they cover the whole process chain from pipe system design to support planning in all the current 3D design sectors. The service field comprises the usual support when commissioning, right through to plant analyses and walk-downs. Through the use of specially developed software for support design highly effective support is available, e.g. in the 3D CAD sector.

Standardized supplementary services

By means of tightly-focused supplementary services the LISEGA standard program can be adapted to particular requirements. In this way the field of application of the products is widened and the LISEGA performance package optimized. All major supplementary services are standardized in line with the LISEGA modular system and cataloged in product group 9.

9.0 Supplementary services

9.1 Adjustment work

Constant and spring hangers/supports are adjusted to installation load on a hydraulic test bench via computerized force and travel measurement, then blocked.

9.1.1 Storage of the blocking devices

On request the spring hangers/supports can be equipped for permanent storage of the blocking devices (after deblocking) on the casing. This is standard practice on the constant hangers.

9.2 Quality assurance

9.2.1 Inspection reports

If required, inspection reports with digitally recorded values can be supplied as function verification for constant hangers, spring hangers and snubbers.

9.2.2 In-service tests

In-service tests can be performed on the mechanically operating components of any make in the respective LISEGA factories or by using mobile test benches directly within the plant itself.

9.2.3 Material certification

The following material certification can be supplied on request.

9.2.4 Supplier's certificate

Manufacturer and shipment in compliance with the order can be confirmed with a supplier's certificate.

9.2.5 Material certificates

The materials used in all catalog components can be verified by verification certificates.

Compilation of component documentation

9.2.6 Acceptance test certificates
Components exposed to the direct flow of force such as, for example, the springs in constant and spring hangers or supports, can be supplied with certificates.

9.2.7 Complete traceability through acceptance test certificates
Due to separate fabrication, complete traceability is possible of materials in all catalog components with test certificates.

9.2.8 Pre-examination documents
The standardized products were largely certified by independent inspection bodies by specified suitability and type tests according to KTA 3265.3 and VGB-R 510 L.

Pre-examination documents such as design drawings, parts lists, calculations, test sequence schedules and welding plans can be produced for special designs, particularly non-standardized components (also for other codes).

9.2.9 Increased quality requirements
For applications subject to increased safety and quality demands, such as nuclear installations, the highest level of the quality assurance program is implemented. All stages of order processing and execution are followed according to recognized procedures, in line with the quality stipulations in the standard codes KTA or ASME section III, NCA and NF.

The following areas are thereby taken into special account:

- **material acquisition from approved suppliers**
- **complete traceability of materials**
- **strict supervision of manufacture**

All areas are fully documented.

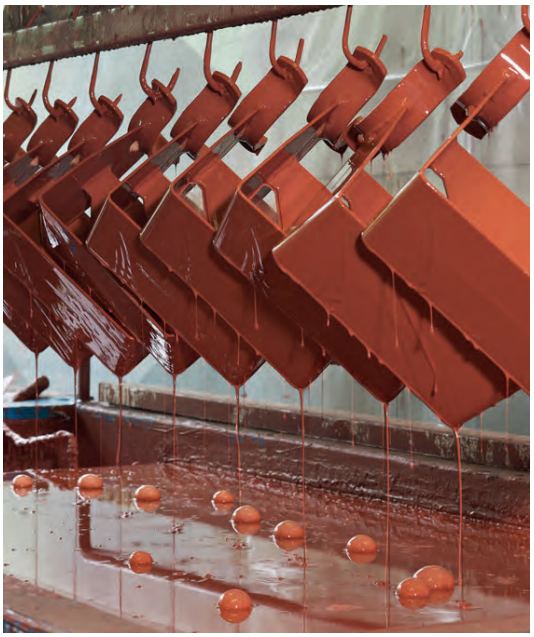

Cataphoretic immersion priming

9.3 Surface treatment

In addition to specified standardized surface protection, further corrosion protection can be supplied according to technical specifications, from page 0.10.

Spray painting

Pre-assembly of load chains

Special treatment

Besides the standard designs available from stock, special designs providing extra corrosion protection can be agreed on. For this, separate manufacturing may be required.

9.4 Pre-assembly

If not otherwise agreed, the components belonging to one scope of supply will be packed in bundles according to types.

9.4.1 Pre-assembly of load chains

For simple handling and time-saving assembly at site, the individual components are supplied already pre-assembled into load chains, according support drawings bundled and marked.

Constant and spring hangers/supports, as well as larger pipe clamps (bulky components), are kept separate for easier handling and are correspondingly marked.

9.4.2 Pre-assembly of pipe clamps and clamp bases

Pipe clamp and clamp base halves are bolted ready for shipment and supplied as complete units.

9.5 Labelling and marking

If not otherwise agreed, the components are sorted according to type, packed and marked with quantity, type number and order number. Additional labeling and marking can, if required, be applied.

9.5.1 Marking of individual parts

If required, all components can be marked individually with type, support position number or order number.

9.5.2 Second name plate

If required, spring hangers and constant hangers can be fitted with a second name plate.

9.5.3 Second load and travel scale

If required, constant spring hangers/spring supports can be fitted with a second travel scale and constant hangers/supports with a second load scale.

9.6 Packaging

Appropriate forms of packaging are provided for the various requirements.

Load chains, pre-assembled, bundled and marked

9.6.1 Inland packaging
For road or rail transport, sturdy wooden crates or pallets are offered, fitted with skids for fork-lifting.

9.6.2 Seaworthy packaging
For sea transport, special wooden crates are used, with skids for fork-lifting and with reinforced side walls for any transport by crane. The lids of the crates are lined inside with plastic shrink wrap as protection against moisture.

Other special forms of packaging can be agreed upon in detail.

9.6.3 Export control and shipment processing
As a globally operating export company, LISEGA and all its affiliated companies take full responsibility for completely fulfilling all customs and export stipulations.

To ensure and properly execute export control, LISEGA has set up structures that correspond, on the one hand, to legal requirements, and on the other, to a smooth and effective work flow.

By certification as "Authorized Economic Operator" (AEO-F) in the year 2009 and as "Known Consignor" in March 2012, LISEGA has shown that it meets all prerequisites for the support of a secure supply chain.

Together with the simplified customs procedures granted by the AEO certificate for the accelerated export of goods, the independent declaration of preferences, as well as the package acceptance free of any control for airfreight due to our "Known Consignor" status, this contributes noticeably to the trouble-free preferential export processing of LISEGA products.

The personnel in our export office all have comprehensive and regularly updated expert knowledge in all aspects of shipment processing.

Should LISEGA not already be responsible for customs clearance according to the terms of delivery, we will assume this at the customer's request, also in the form of direct representation, after being granted power of attorney for customs.

Our notable competence in shipping processing is matched by the high standards of packaging and marking at LISEGA, fully covering all international standardized stipulations in the land, sea and air transport sectors. This is confirmed by the unanimously high acceptance shown by our customers.

9.7 Transport

If requested, we will take charge of the logistics processing for shipment of the components to the construction site or any other shipping addresses.

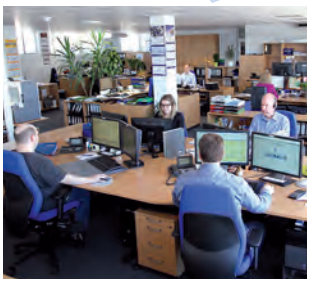

Project-related order logistics

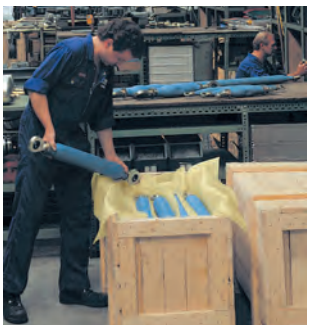

Seaworthy packaging

Part of the dispatch department

Engineering support design

The proper functional integration of pipe supports into the existing piping and plant concept has a decisive influence on the long-term behavior of the pipe systems. Support design should therefore be given the same care and attention as the piping itself. In this regard, selection of the component, the availability of the latest design software and especially the long experience of the planning engineers have a decisive influence on the quality of design.

Engineering support design

Besides stringent demands concerning quality, it is also important in support planning to fulfill strict requirements regarding tight schedules and economic targets. In order not to endanger the budgets and logistics of entire projects, complete planning phases are outsourced to engineering offices specialized in the work.

As a specialist, LISEGA has long been qualified in the processing of complex planning projects by offering the relevant expertise from over 50 years' experience in support technology. At all LISEGA locations, highly qualified and experienced technicians and engineers are on hand.For internationally overlapping projects and whenever required, the engineering sections of the individual locations work in collaboration with each other.

The following benefits are offered to the customer when using LISEGA's planning expertise:

- **economical limitation of their own personnel deployment**
- **high security and professional execution through the use of experienced specialists**
- **rapid and flexible processing of the whole project, from ordering to shipping, following the principle 'All from a single source'**
- **quick delivery due to prompt processing**
- **complete and permanent computerized documentation**
- **highly qualified experts always on hand for follow-up service**

Pipe supports for complete plants, including secondary steelwork, are conceived, planned and reproduced in drawings. On the basis of the LISEGA modular system and decades of experience, ready-to-install load chains – from structural attachments to pipe-surrounding components – are generated from standard supports.

Should components be required that do not form part of the standard LISEGA program (e.g. anchors etc.) LISEGA can provide appropriate solutions.

Recognized international technical codes and standards, as well as customer specifications, are thereby taken into account.

The relevant pipe stress analysis data are observed for the design and dimensioning of supports, as well as the detailed pipe system layout plans and structural situation.

Besides LISEGA's LICAD® program, the latest software is applied for the efficient conversion of the support situations into 2D or 3D models and for the economical generation of drawings. The following standard programs are currently being used:

- **LICAD®**
- **AutoCAD®**
- **MicroStation®**
- **PDMS™**
- **STAAD.Pro® (static/dynamic calculations for secondary steelwork)**
- **SmartPlant® review**
- **Navisworks®**
- **ROHR2®**
- **CAESAR II®**

Engineering in Zeven, Germany

Analysis of complex support systems

Shown below is an example of a planning sequence for a suitable LISEGA support design in **seven steps**. Depending on needs and specifications, the engineering services can also be offered individually.

Pipe system calculations

The following typical load cases are generally calculated per support point for new and existing plants:

1. **Primary loads**
   - **weight and internal pressure**

2. **Secondary loads (thermal expansion)**
   - **operating loads**
   - **design conditions**
   - **boiler out of service**
   - **(AB operation of pumps)**

3. **Occasional loads**
   - **earthquakes**
   - **wind**
   - **pressure impact loads**

4. **Test loads**
   - **water pressure tests**
   - **pickling (acid clean)**

On the basis of the stipulations and information, ready-to-install load chains from standard attachments to pipe-surrounding components are generated with the LISEGA design program LICAD®.

For the calculations, the codes ASME B31.1, ASME B31.3 and DIN EN 13480 are usually followed. When ordering, the desired code issue according to version and year must be stated.

In existing plants it is frequently necessary, for reasons of operational safety, to update pipe systems and their supports to meet the requirements of the latest technology. Very often, sufficient calculation documentation on the original layout design is no longer available. If required, the stress analysis can also be supplied for these pipe systems.

LICAD®

In accordance with calculations and customer stipulations, the installed load chain is generated from standard supports with the LICAD design program, from structural attachments right through to pipe-surrounding components.

R E S U L T S -- Program ROHR2 BBS/31.0 -- Page 34
Commiss. AGX43458 Date 13.12.11 10:54:35
B0LCJ30/35/50/55BR010 B0LCJ35/55BR020

support point | function | marking number

L i n e 3 P o i n t 329 S HR B0LCJ55BQ008
Support in Absolute Coordinate System

Spring hanger

load cases

LoadCase	WX PX mm mrad	WY PY mm mrad	WZ PZ mm mrad	AQX AMX kN kNm	AQY AMY kN kNm	AQZ AMZ kN kNm
Dead Weight	-0.10 -0.03	-0.15 -0.26	0.00 0.10	0.000 0.000	0.000 0.000	-2.906 0.000
Operation Load 1	-7.51 1.98	2.29 0.22	2.91 2.29	0.000 0.000	0.000 0.000	-2.712 0.000
Operation Load 2	-1.46 1.35	3.37 0.93	2.16 1.28	0.000 0.000	0.000 0.000	-2.762 0.000
Operation Load 3	-6.88 1.91	2.36 0.31	2.82 2.19	0.000 0.000	0.000 0.000	-2.718 0.000
Earthq.dyn.1_X	51.28 4.54	13.63 1.18	2.48 11.21	0.000 0.000	0.000 0.000	0.165 0.000
Earthq.dyn.1_Y	27.28 3.16	12.87 2.54	2.10 5.95	0.000 0.000	0.000 0.000	0.140 0.000
Earthq.dyn.1_Z	2.55 0.41	1.72 0.39	0.97 0.58	0.000 0.000	0.000 0.000	0.065 0.000
Extreme value	-65.65 7.54	22.19 3.76	6.30 14.99	0.000 0.000	0.000 0.000	-3.131 0.000
Hydraulic Test	-0.09 -0.03	-0.15 -0.25	0.00 0.09	0.000 0.000	0.000 0.000	-2.906 0.000

travel + twist | loads and moments

Step 1: Pipe stress analysis (ROHR 2®): travel / deflections / loads / moments (pipe stress analysis as iterative process)

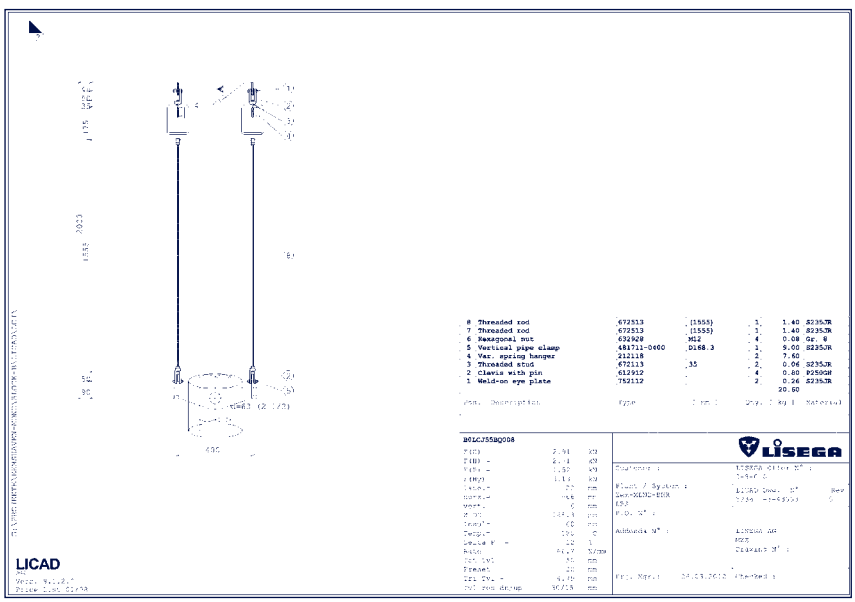

Step 2: Application of LICAD® - technical selection of pipe support

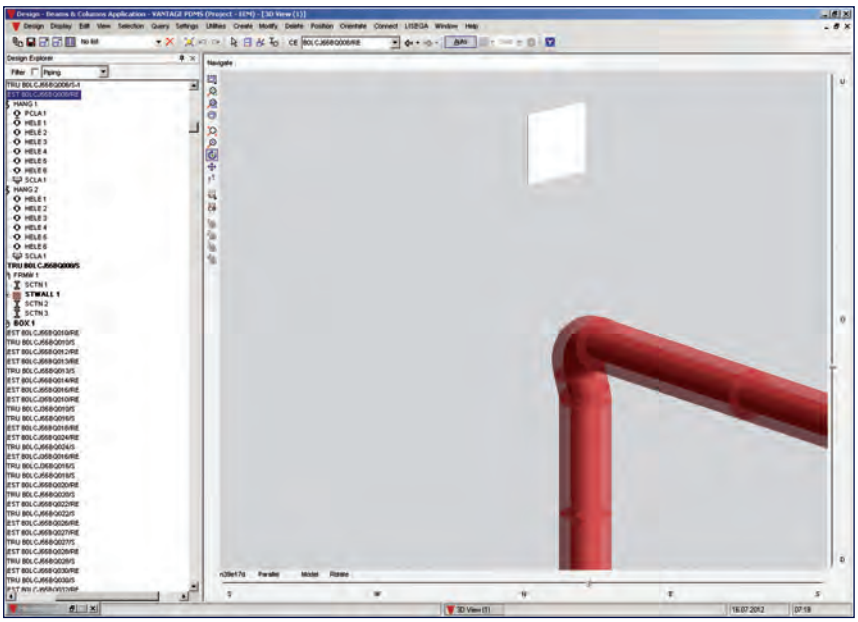

Step 3: Checking the technical data and surrounding structure in the 3D model (e.g. PDMS™, PDS®, SmartPlant®)

Support design in 3D

For the design of pipe supports in 3D the customer provides a model complete with pipe systems, steelwork, building structures and components, as well as all the necessary databases. In addition, any specific requirements are to be indicated for the design of the pipe supports.

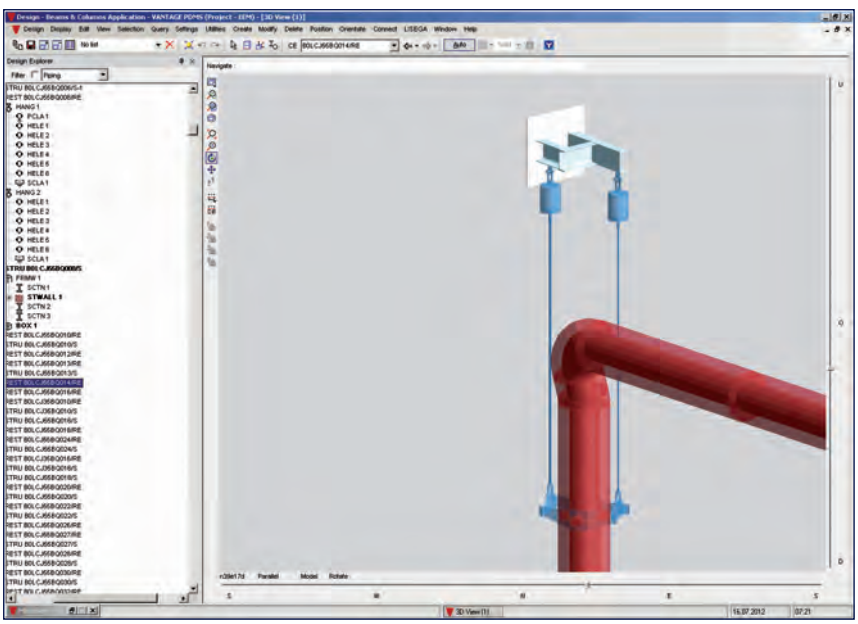

Step 4: Integration of the LICAD® support into the 3D model with collision analysis and integration of secondary steelwork

The support designs are planned directly in 3D (PDMS / SmartPlant), including the secondary steelwork required, and laid out. The load chains generated in LICAD® are imported via existing interfaces into the 3D model. Any secondary steelwork needed can be supplemented directly in PDMS.

Finally, a check is made for any possible interference. The customer receives a database of the 3D model that contains all the support designs checked for freedom from interference.

In almost all other 3D programs LISEGA can, by way of the viewer, edit the characteristics necessary for support design.

Generation of 3D models with MicroStation® for PDS®

For the creation of 3D models on MicroStation® the pipe supports are first generated as 2D displays from a sketch. The 2D data are transformed by LICAD® into 3D data and exported via an interface into the MicroStation® 3D model. Any secondary steelwork required is supplemented in the 3D model. In PDS® the completed 3D models can be used for collision tests.

Generation of drawings

A 2D drawing is generated directly from the PDMS™ model in DXF format with different views. Parts list, site plan and all the technical specifications are stored as data sets and can be further edited. If required, an isometric display of the support on the drawing is possible.

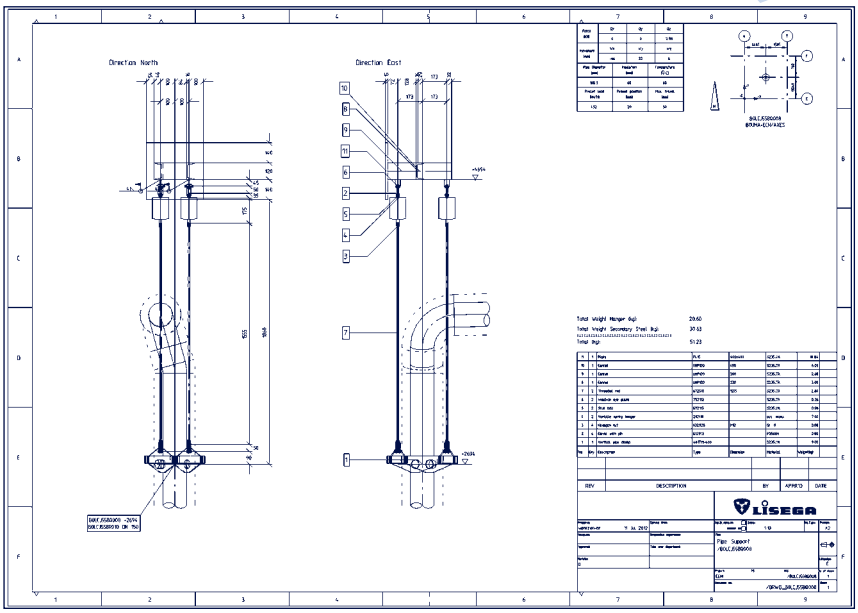

Step 5: Extract from the 2D drawing with parts list, loads, displacements and site plan from the 3D model

From the drawing generated automatically in Step 5, a production drawing in DWG (AutoCAD®), DXF or DGN (MicroStation®) format is generated. In this, all the information required for installation, including welding specifications, borehole patterns etc. can be seen.

The title block can be individually designed.

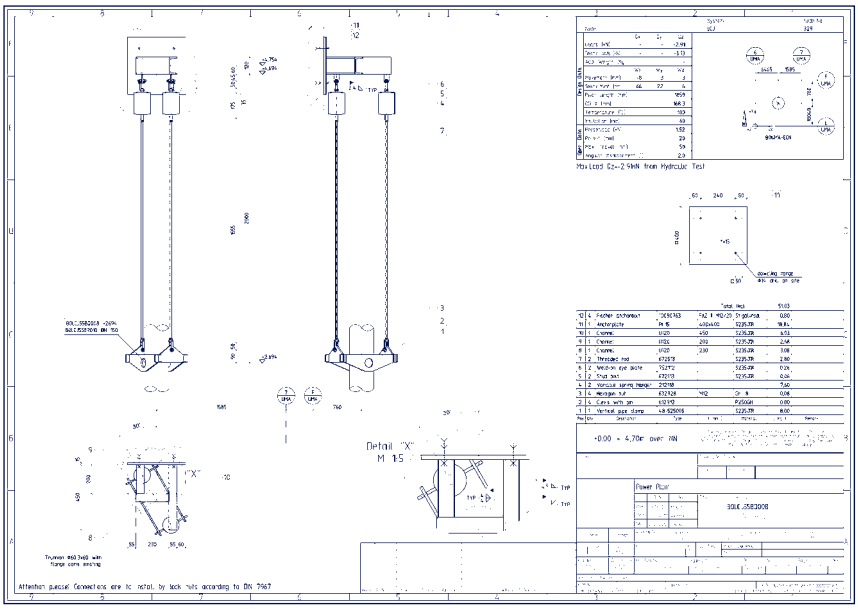

Step 6: Generation of a detail drawing (installation drawing) with different views and sections

Static calculation of secondary steel including structural attachment loads

LISEGA supplies the design report summary for the dimensioning of the planned secondary steel according to the AISC code or Eurocode 3. This summary is provided with the STAAD.Pro® statics program.

Anchor certification

Individual certificates can be provided for most anchor manufacturers with the aid of the corresponding design programs. For economic planning a standard has been developed by which individual certificates can be dispensed with. If required, the necessary documentation can be produced.

Welding certification

In accordance with the specified codes, individual weld seam certification for steelwork attachments can be provided.

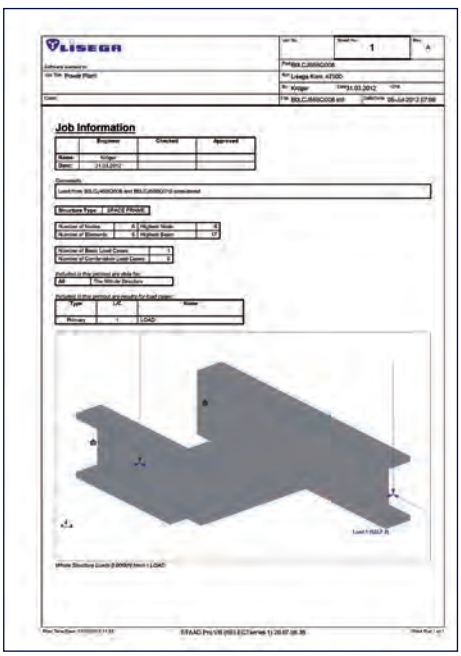

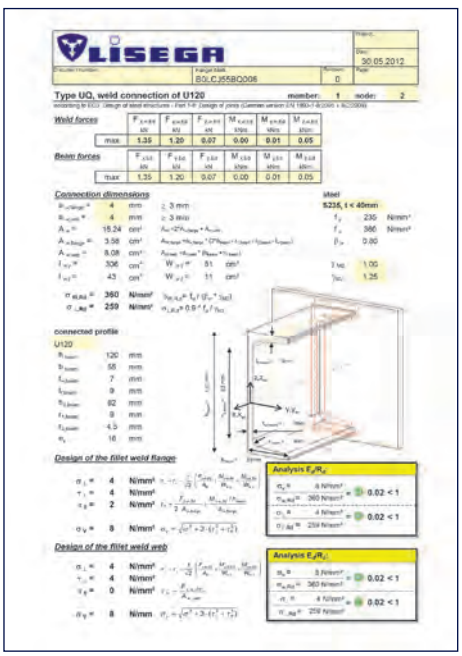

Step 7: provision of certification (optional)
- *statics secondary steel incl. structural attachments*
- *anchors*
- *weld seam*

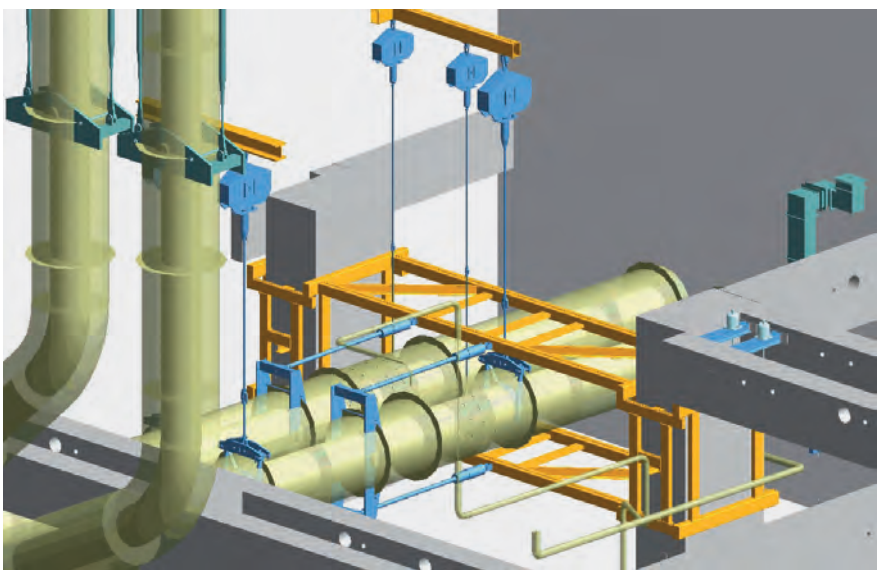

Pipe supports with complex secondary steel design in 3D model

Field service

9

Plant service

Additional stress and strain due to deficient realized pipe restraints can lead, during operation, to lasting damage that can considerably increase the risk of malfunction and breakdowns in the plant.

Frequently occurring defects in the pipe supports are:

- **poor support designs**
- **faulty installation**
- **incorrect load settings**
- **unsuitable layout**
- **deficient quality of support components**

A particular problem often arises in aged installations when spring and constant hangers use springs that are not pre-relaxed (see page 1.15 on this). In these cases, an ever-increasing loss of ultimate load occurs due to growing relaxation over time.
The resulting load deviations can lead to impermissible additional stresses, especially at sensitive points such as connections. Timely inspection in the plant can contribute to the prompt identification and elimination of critical stresses.

LISEGA service team on construction site

For this special service, we offer the resources of an international market leader, with qualified and experienced specialists on hand at all LISEGA Group locations.

Our experts check the thermal pipe displacement and inspect the support systems. They prepare detailed reports on this and propose suitable solutions. For the presentation and documentation of the findings, special software is applied.

The service team is specially trained for the execution of such services in the pipe support field and works strictly in accordance with quality management stipulations and recognized safety guidelines.

The operational safety of pipe systems and hence the readiness and long life of the plants depend in great measure on the condition and functional capacity of the supports used.

To avoid costly damage and breakdowns, regular inspections of the thermal pipe displacement and the condition of the supports – particularly in older plants – is urgently recommended!

Recording List for Pipe Supports

LISEGA

Plant Name: [redacted]
Piping System: 1AB-H01- Main Steam Unit 1

Temp.(1): ambient
Temp.(1): 540°C
Temp.(2):
Temp.(2): 540°C

Recording cold (1): May 2000
Recording hot (1): Nov. 2000
Recording cold (2):
Recording hot (2): April 2013

Performed by:
Name: by others
Name: [redacted]n, Lisega SE
Name:
Name: [redacted]n Lisega SE

Elevation means pipe elevation

		Information on the Name Plate							Recording during cold set							Recording during operation								real travel		Max. possible travel postion	Poss. travel	See separate lists	
									Cold position				Travel reserve			Hot position				Travel reverse				G					
		A						B	C	E	E	E1	E1.1	E1.2	E1.3	D	F	F	F1	F1.1	F1.2	F1.3							
No.	Ele-vation (m)		Type	Serial Number	Calibr. load (KN)	Theor travel Up (mm)	Theor travel Down (mm)	Load scale (KN)	White sticker (mm)	Actual May 13 (mm)	Actual (2) (mm)	Dev. (mm)	Up wards (mm)	Down wards (mm)	Travel is poss.?	Red sticker (mm)	Actual Nov.00 (mm)	Actual Apr.13 (mm)	Dev. wards (mm)	Up wards (mm)	Down wards (mm)	Travel is poss.?	Theor. travel (mm)	Nov. 2000 (mm)	April 2013 (mm)	(mm) (mm)	(mm)	Information	Remarks
U1	39.0	1AB- H-01-001	118215	9877505/48	65.53		76		13	35		-22	35	67	no	89	105	102	-13	102	0	yes	-76	-70	-67	0 - 102	102		X
U1	39.0	1AB- H-01-001	118215	9877505/66	65.53		76		13	35		13	0	102	yes	89	107	108	-19	108	-6	yes	-76	-72	-73	0 - 102	102		X
U1	34.0	1AB- H-01-002	guide																										X
U1	30.0	1AB- H-01-003	119315	9877940/24	83.40		157		27	80		27	0	200	yes	184	179	192	-8	192	8	yes	-157	-99	-112	0 - 200	200		
U1	30.0	1AB- H-01-003	119315	9877940/18	83.40		157		22	85		22	0	200	yes	179	205	193	-14	193	7	yes	-157	-120	-108	0 - 200	200		
U1	30.0	1AB- H-01-003	306316	98614353/05													265	273		273				-180	-273	0 - 300			X
U1	30.0	[illegible]	116315	9876599/50	22.82		[illegible]		[illegible]	[illegible]		50	0	249	yes	210	[illegible]	[illegible]	[illegible]	223	26	yes	-160	-110	-123	0			

Record from a hanger inspection

Controlling a pipe support

Testing constant hangers on-site with a mobile test bench

The service package covers the following fields of performance:

Inspection of pipe supports

- **inspection of general condition of pipe supports**
- **load and travel checking of the spring hangers**
- **function testing of constant and spring hangers with mobile test facilities at the plant or on stationary test benches at the LISEGA facility.**

Inspection of pipe system displacement

- **inspection of the general condition of the piping sections and if necessary the geometric positioning**
- **inspection of the pipe systems for unrestricted freedom of movement in all three planes**
- **determination of the vertical displacement at all support points, at the pipe system connections and selected points in all three planes**

Design of supports at the plant

- **design and layout of pipe supports for updating and modifications in older plants**
- **measurement work at the plant**
- **elaboration of solutions to problems arising from restrictions in space**
- **design of pipe supports via LICAD® and AutoCAD**
- **preparation of lists of parts and materials**

Discussion of findings and observations from the inspection of pipe systems

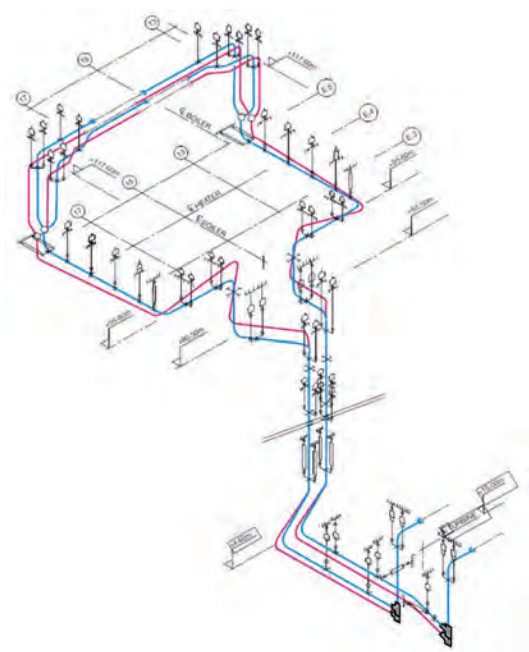

Cold-/hot position of a pipe system

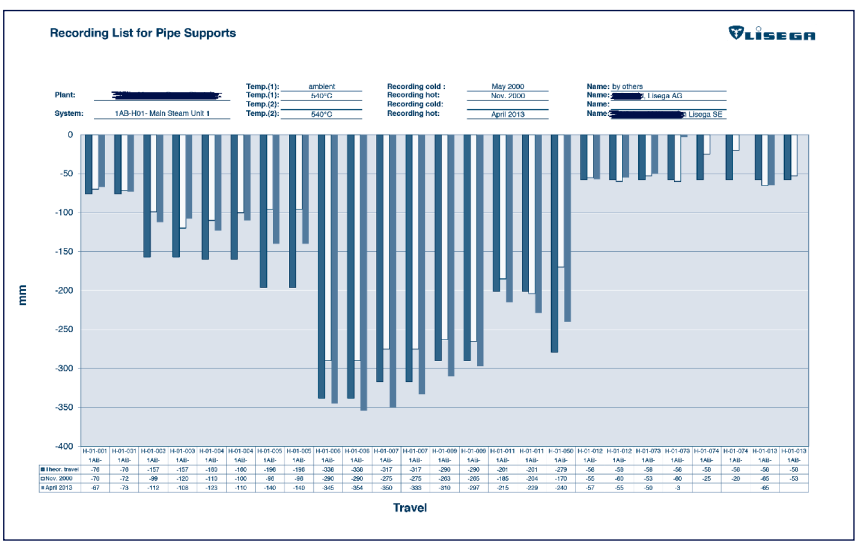

Graphic display of pipe system displacement

Construction supervision, installation and commissioning

- material receipt and control
- organization and administration of warehouse stocks
- pre-assembly and arrangement of complete support configurations
- installation of supports at designated points
- supervision of installation of piping into supports prepared
- inspection of the system for correct installation according to drawings and installation and operating instructions
- deblocking and commissioning of supports in line with agreed procedures
- load and travel checks after commissioning according to requirements
- inspection for freedom of movement in pipe systems in all 3 planes
- subsequent regulation of hangers if load differences are detected

Testing, maintenance and inspection of snubbers of all makes

- visual inspection for signs of possible malfunctioning
- dismounting of snubbers according to stipulations or requirements and documentation of external condition and surrounding conditions
- function testing on mobile test benches at the plant or on corresponding test facilities at the LISEGA facility
- dismantling of snubbers and inspection of individual components for wear and damage

Inspection of supports at the plant

- exchange of all seals, hydraulic fluid and any other components showing noticeable wear
- final function tests according to test program and specifications on hand
- re-installation of snubbers at the plant
- provision of complete final documentation

The wide spectrum of the LISEGA service package applies in particular to pipe supports and their application. If properly implemented, LISEGA service work makes a valuable contribution to the functional safety and long life of complex piping systems.

Visual inspection of snubbers

Testing snubbers of different makes at the plant using a mobile LISEGA test bench.

LISEGA SE - Germany
Gerhard-Liesegang-Straße 1
27404 Zeven
Postfach 1357
27393 Zeven
Tel.: +49 (0) 42 81 - 713 - 0
Fax: +49 (0) 42 81 - 713 - 214
E-Mail: info@de.lisega.com
www.lisega.de

LISEGA SAS - France
Z.I. La Marinière
21, Rue Gutenberg
91919 Bondoufle, Cede
Tel.: +33 (0)1 60 86 40 21
Fax: +33 (0)1 60 86 48 28
E-Mail: info@fr.lisega.com
www.lisega.fr

LISEGA Inc. - USA
370 East Dumplin Valley Rd.
Kodak, TN 37764
Tel.: +1 (0) 865 940 5200
Fax: +1 (0) 865 940 5140
E-Mail: info@us.lisega.com
www.lisega.com

LISEGA Ltd. - England
Unit 3, Washington Centre
Halesowen Road
Netherton
West Midlands, DY2 9RE
Tel.: +44 (0) 13 84 458 660
Fax: +44 (0) 13 84 213 301
E-Mail: info@uk.lisega.com
www.lisega.co.uk

LISEGA PST Co. Ltd. - China
LISEGA Pipe Support Technologies
(Shanghai) Co., Ltd.
7800 Songze Av., Qingpu Industrial Zone
Shanghai, ZIP 201700, PR China
Tel.: +86 (0) 21 69 21 2888
Fax: +86 (0) 21 69 21 2999
E-Mail: info@cn.lisega.com
www.lisega.com.cn

© LISEGA – 2016

Standard Supports 2020 US

LISEGA